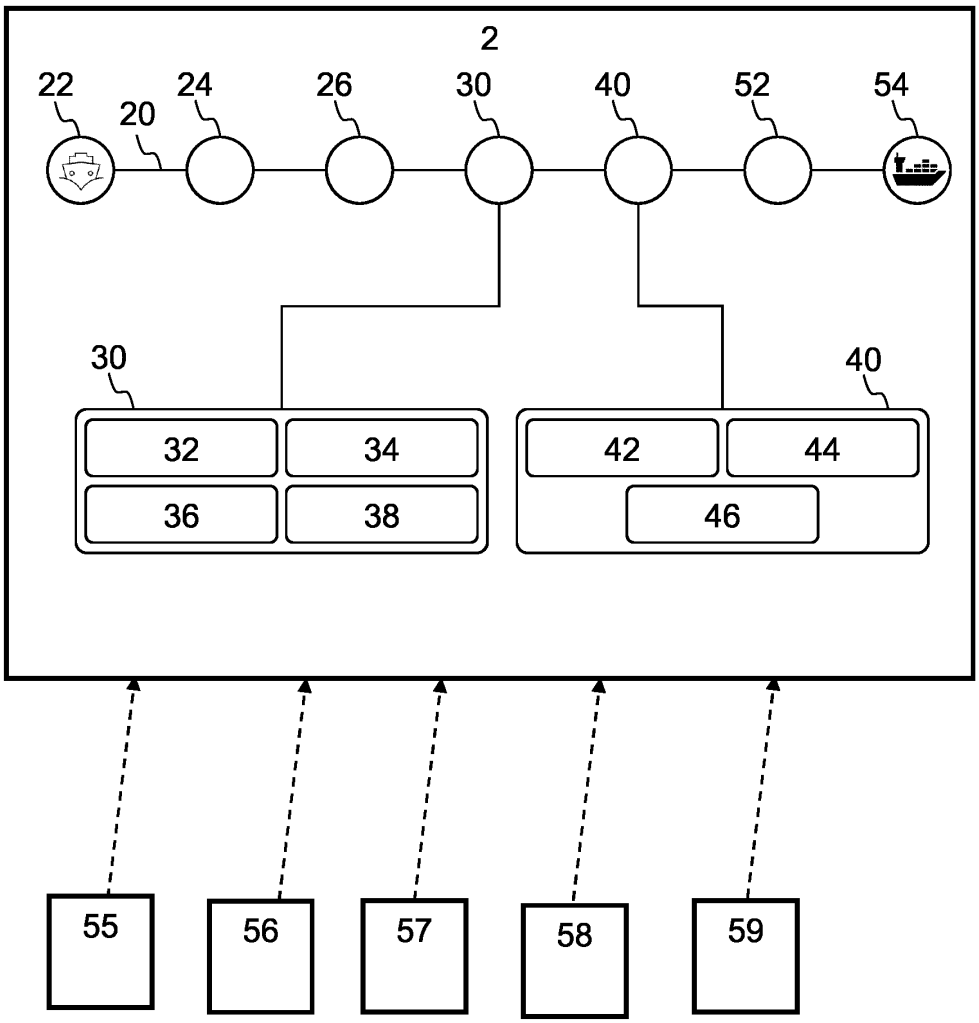

Fig. 1

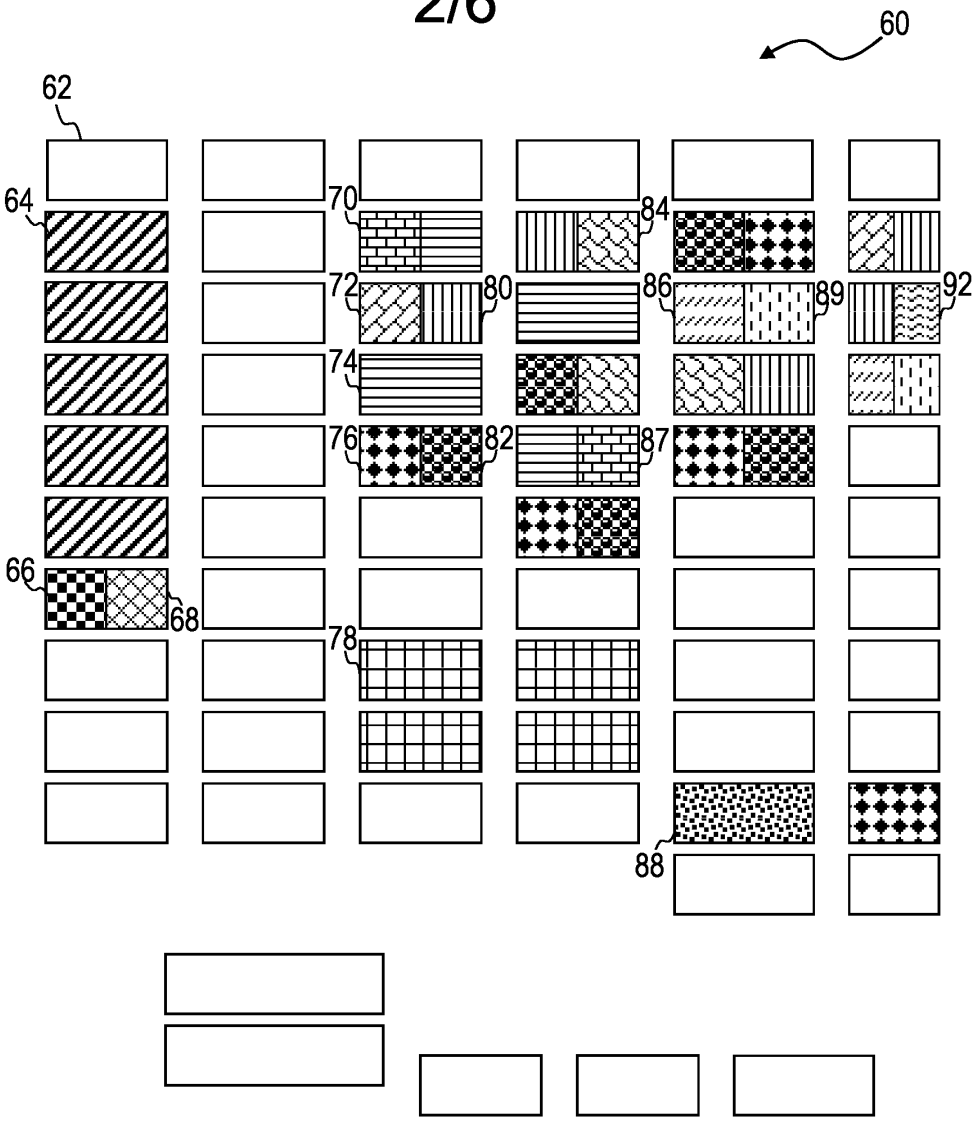

Fig. 2

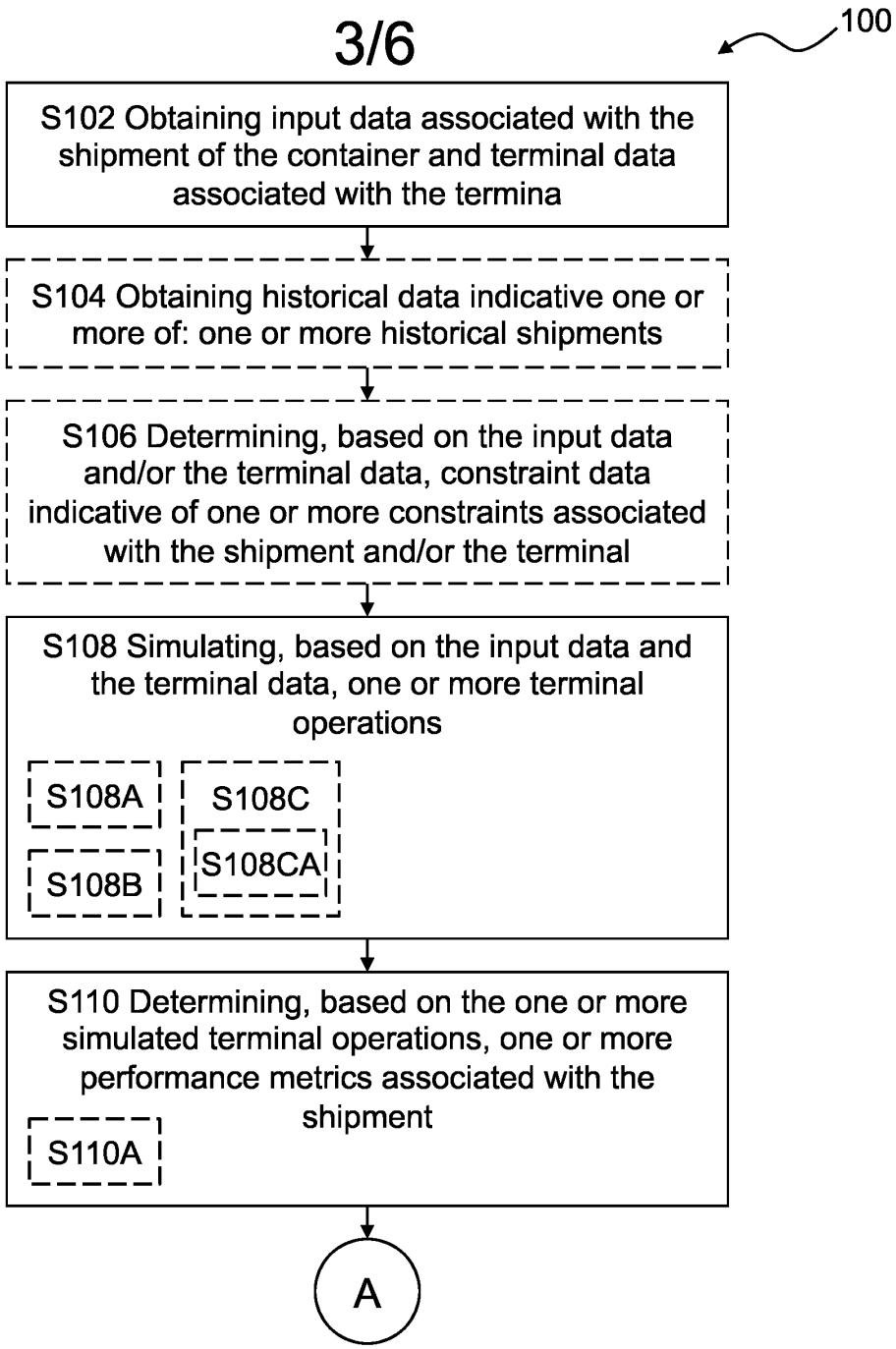
100
S102 Obtaining input data associated with the shipment of the container and terminal data associated with the termina
S104 Obtaining historical data indicative one or more of: one or more historical shipments
S106 Determining, based on the input data and/or the terminal data, constraint data indicative of one or more constraints associated with the shipment and/or the terminal
S108 Simulating, based on the input data and the terminal data, one or more terminal operations
S108A
S108B
S108C
S108CA
S110 Determining, based on the one or more simulated terminal operations, one or more performance metrics associated with the shipment
S110A
A

Fig. 3A

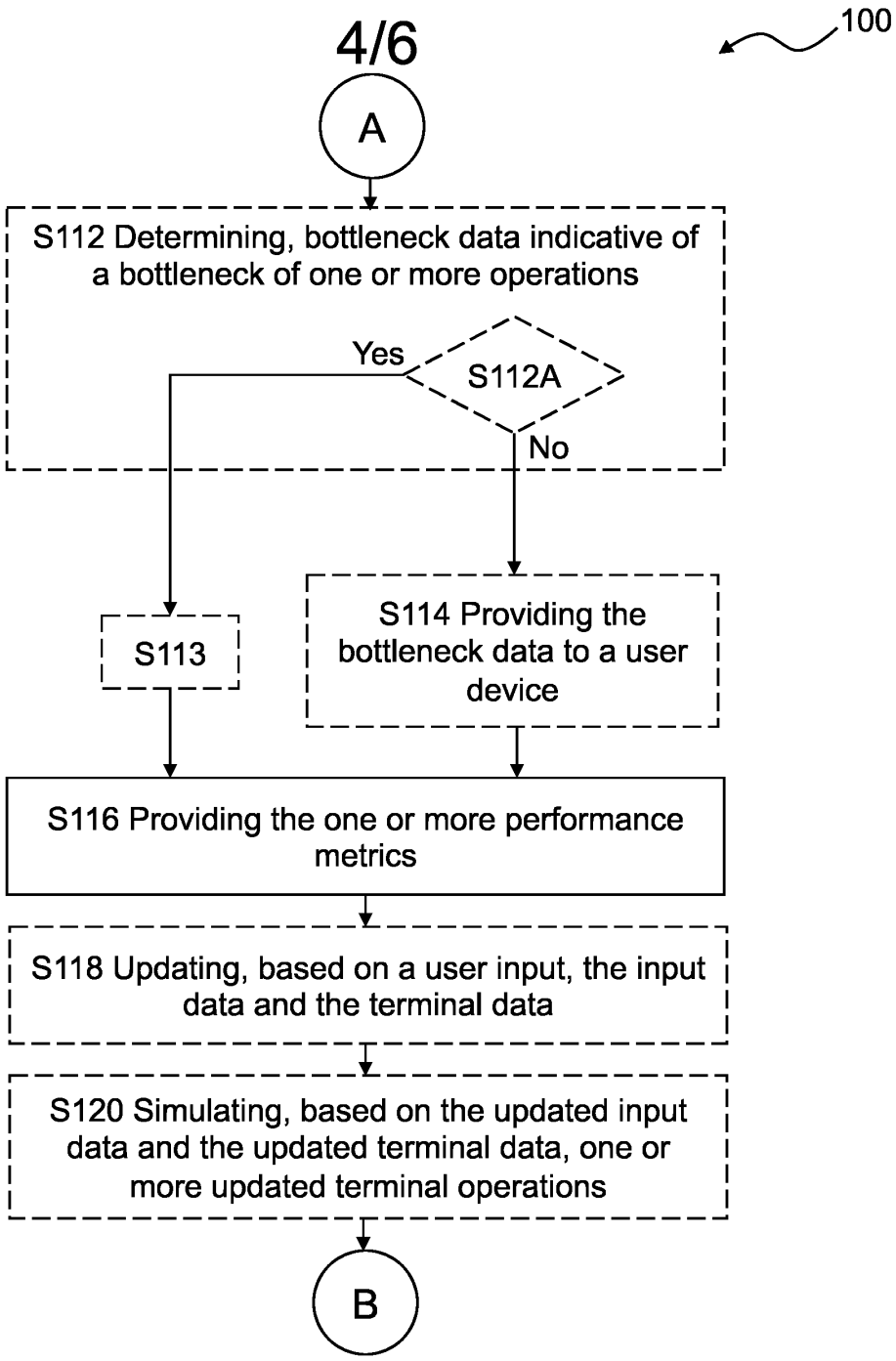
4/6
100
A
S112 Determining, bottleneck data indicative of a bottleneck of one or more operations
Yes
S112A
No
S113
S114 Providing the bottleneck data to a user device
S116 Providing the one or more performance metrics
S118 Updating, based on a user input, the input data and the terminal data
S120 Simulating, based on the updated input data and the updated terminal data, one or more updated terminal operations
B

Fig. 3B

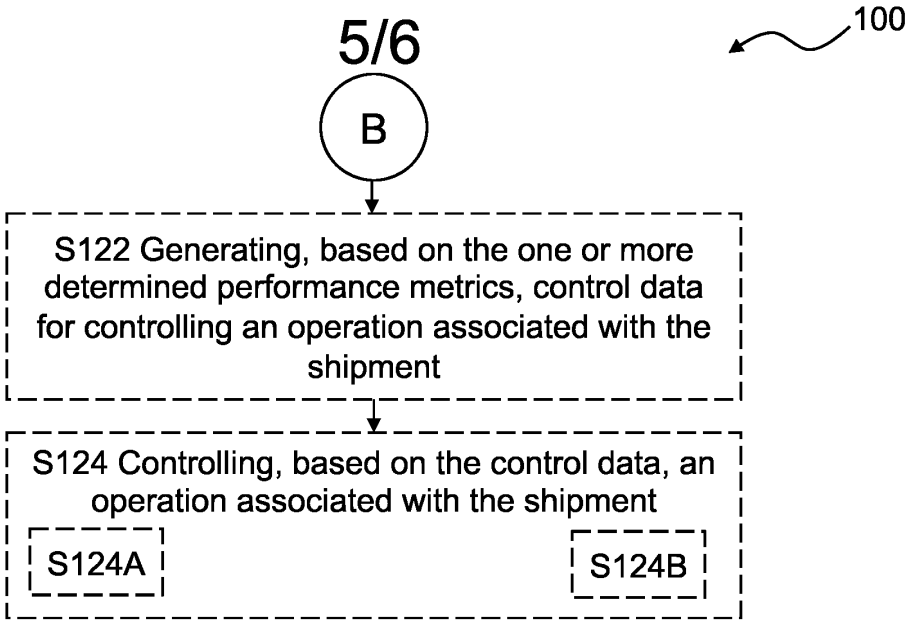
5/6
100
B
S122 Generating, based on the one or more determined performance metrics, control data for controlling an operation associated with the shipment
S124 Controlling, based on the control data, an operation associated with the shipment
S124A
S124B

Fig. 3C

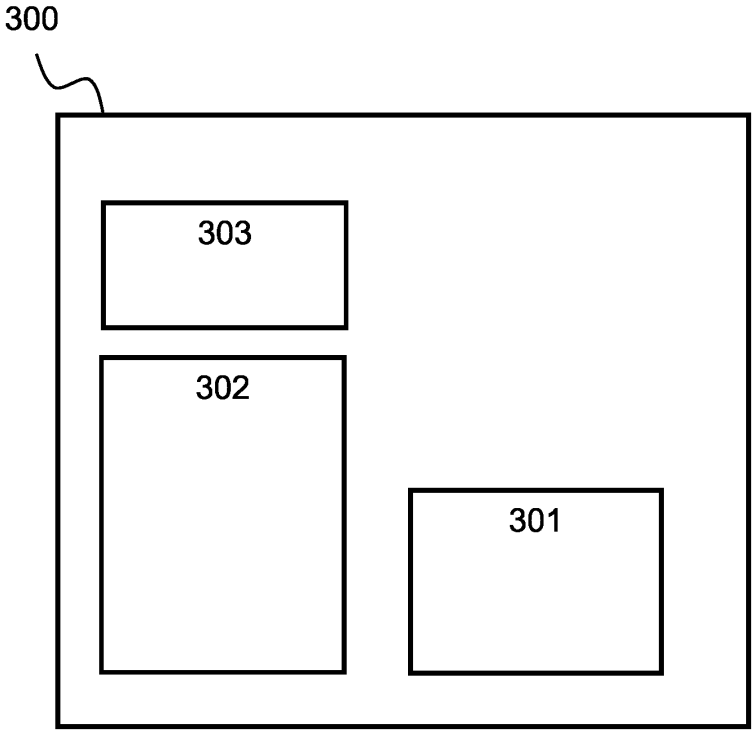

Fig. 4