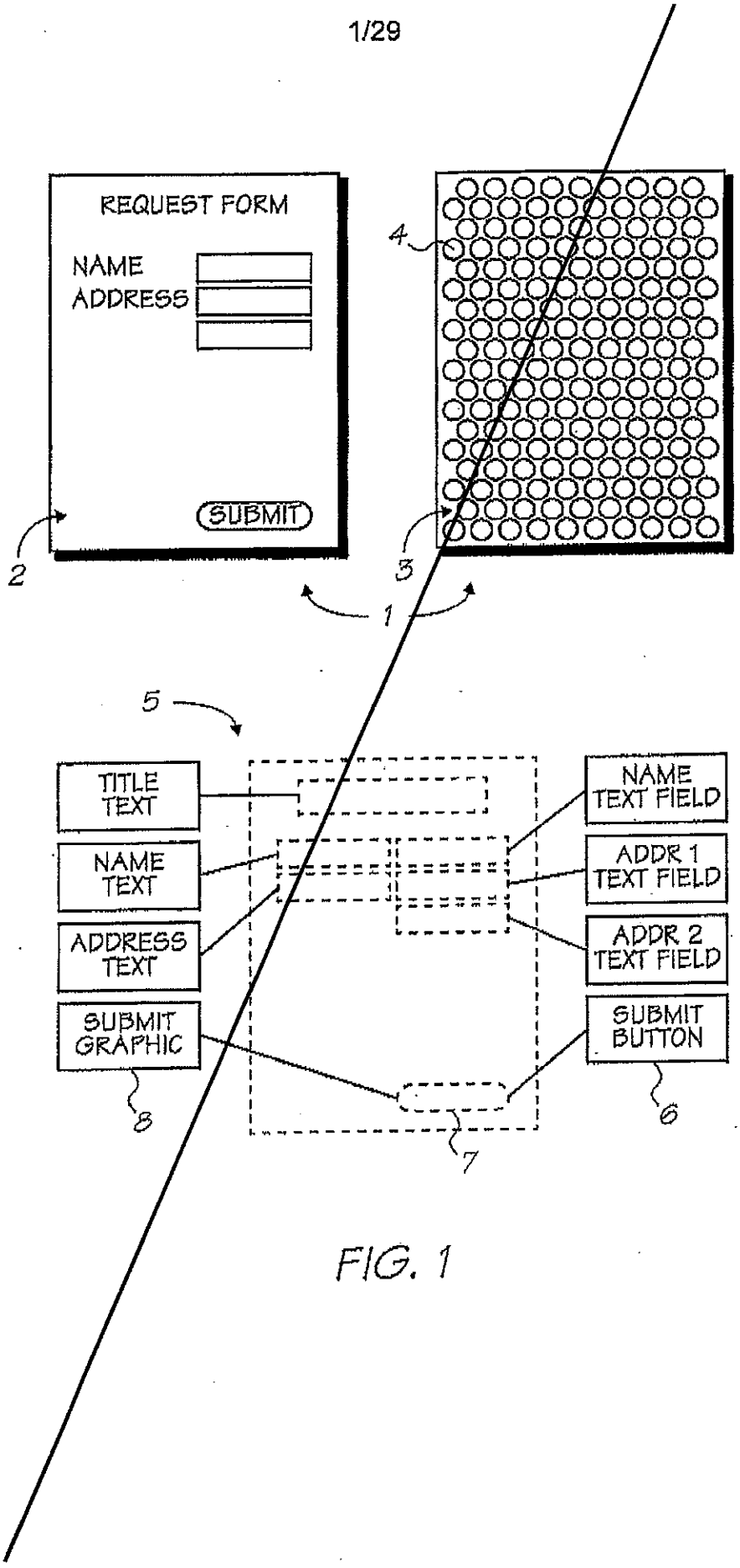
REQUEST FORM
NAME
ADDRESS
SUBMIT
2
3
4
1
5
TITLE TEXT
NAME TEXT
ADDRESS TEXT
SUBMIT GRAPHIC
8
7
NAME TEXT FIELD
ADDR 1 TEXT FIELD
ADDR 2 TEXT FIELD
SUBMIT BUTTON
6

FIG. 1

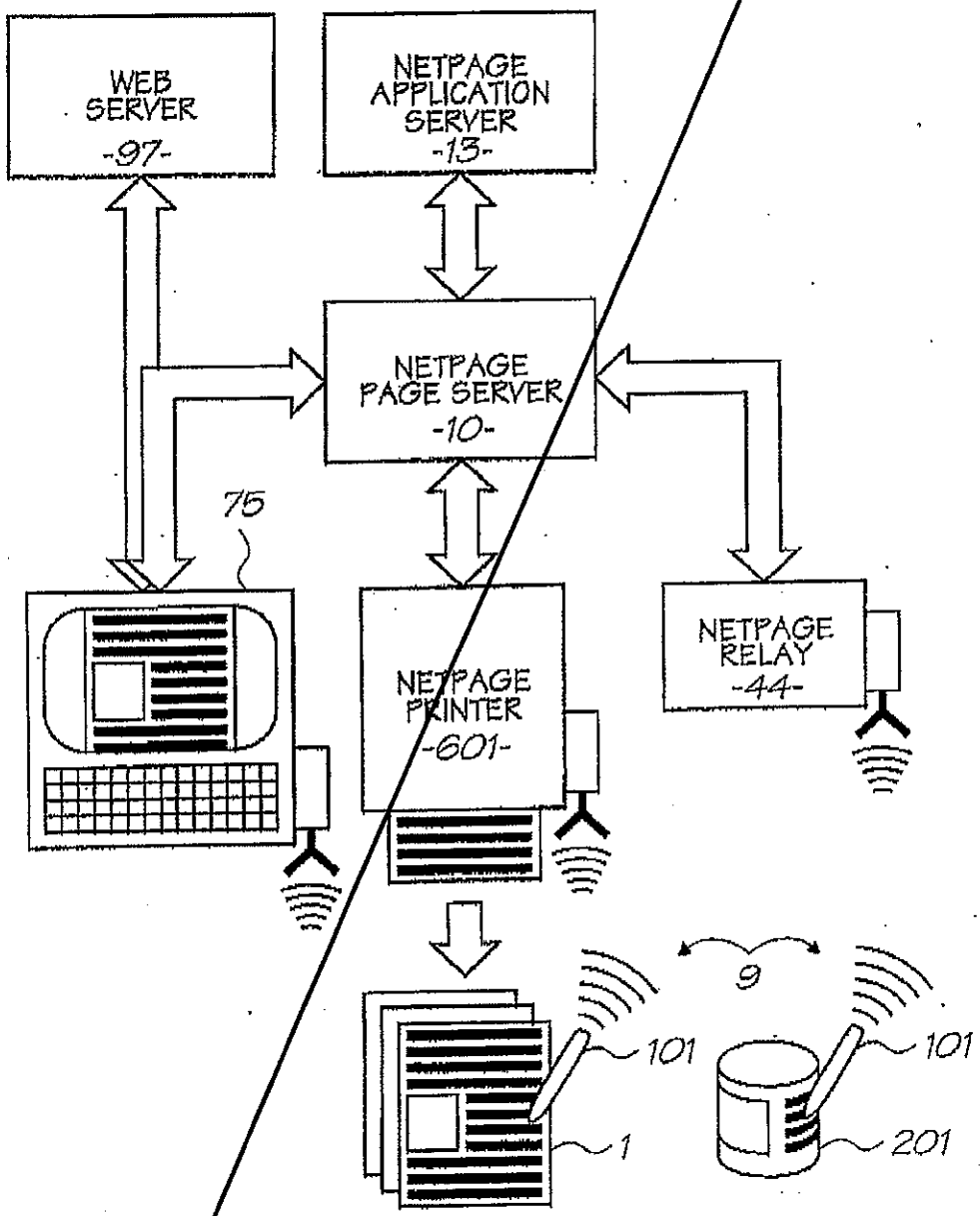
WEB SERVER -97-
NETPAGE APPLICATION SERVER -13-
NETPAGE PAGE SERVER -10-
75
NETPAGE PRINTER -601-
NETPAGE RELAY -44-
9
101
101
1
201

FIG. 2

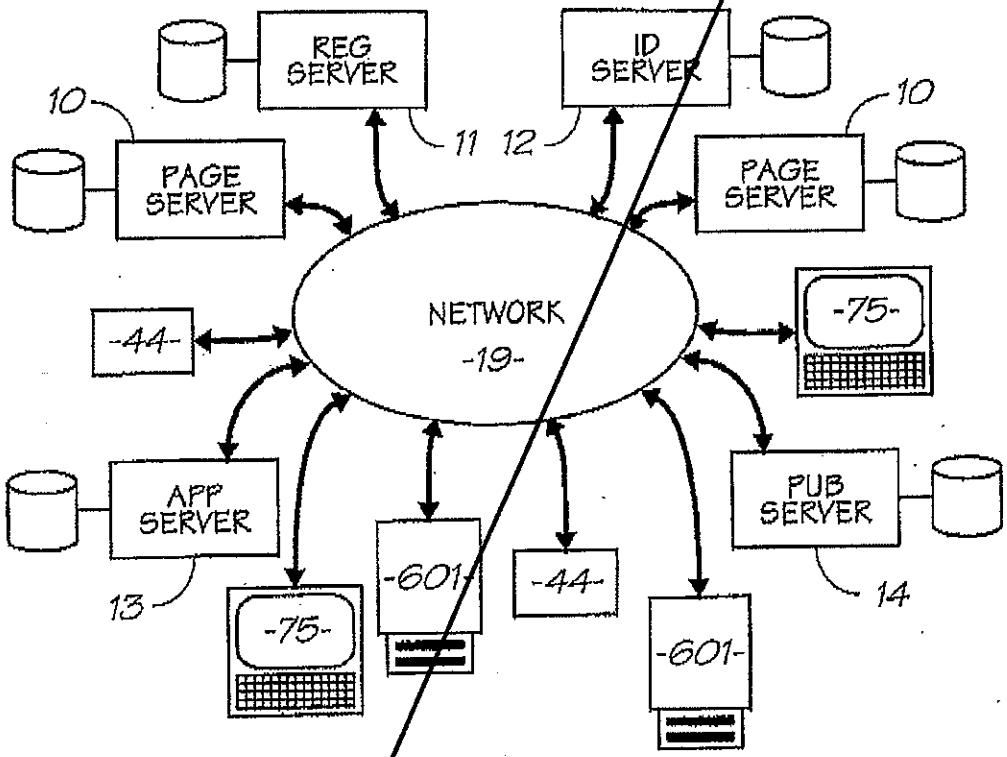
REG SERVER
ID SERVER
10
11
12
10
PAGE SERVER
PAGE SERVER
NETWORK
-19-
-44-
-75-
APP SERVER
PUB SERVER
13
14
-601-
-44-
-75-
-601-

FIG. 3

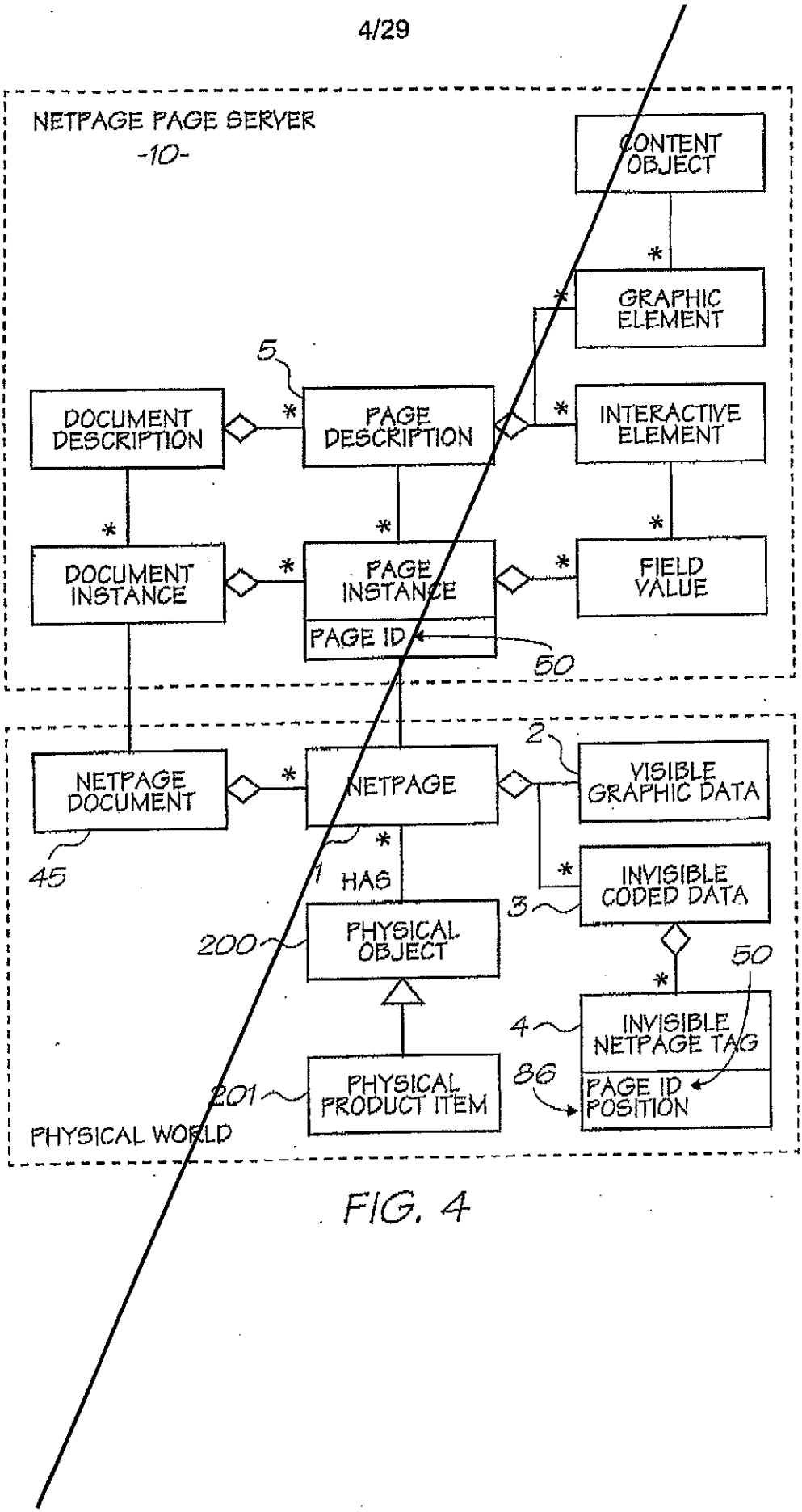
NETPAGE PAGE SERVER
-10-
CONTENT OBJECT
GRAPHIC ELEMENT
INTERACTIVE ELEMENT
FIELD VALUE
5
DOCUMENT DESCRIPTION
PAGE DESCRIPTION
DOCUMENT INSTANCE
PAGE INSTANCE
PAGE ID
50
2
NETPAGE DOCUMENT
NETPAGE
VISIBLE GRAPHIC DATA
45
1
HAS
INVISIBLE CODED DATA
3
200
PHYSICAL OBJECT
50
4
INVISIBLE NETPAGE TAG
86
PAGE ID
POSITION
201
PHYSICAL PRODUCT ITEM
PHYSICAL WORLD

FIG. 4

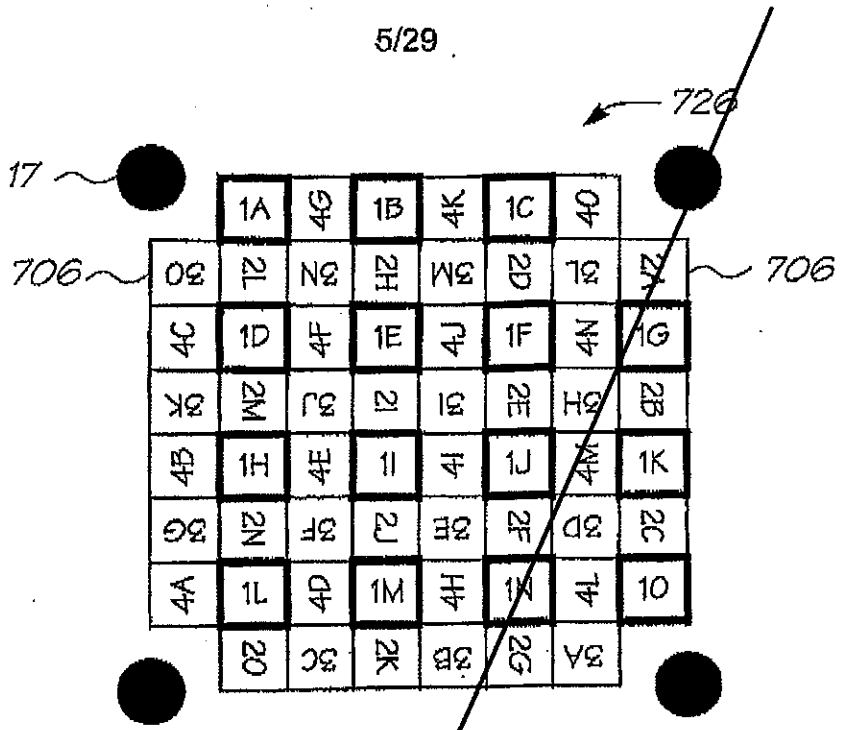
726
17
706
706
1A
4G
1B
4K
1C
4O
3O
2L
3N
2H
3M
2D
3L
2Z
4C
1D
4F
1E
4J
1F
4N
1G
3K
2M
3J
2I
3I
2E
3H
2B
4B
1H
4E
1I
4I
1J
4M
1K
3G
2N
3F
2J
3E
2F
3D
2C
4A
1L
4D
1M
4H
1N
4L
1O
2O
3C
2K
3B
2G
3A

FIG. 5A

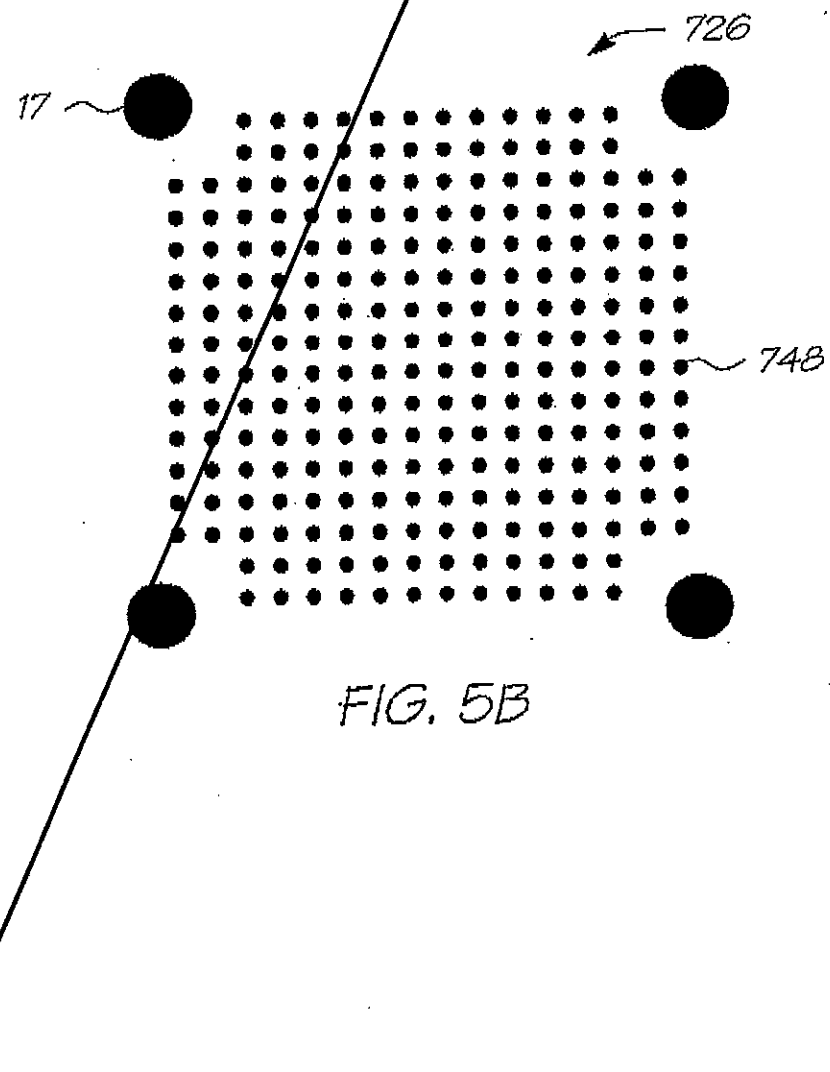
726
17
748

FIG. 5B

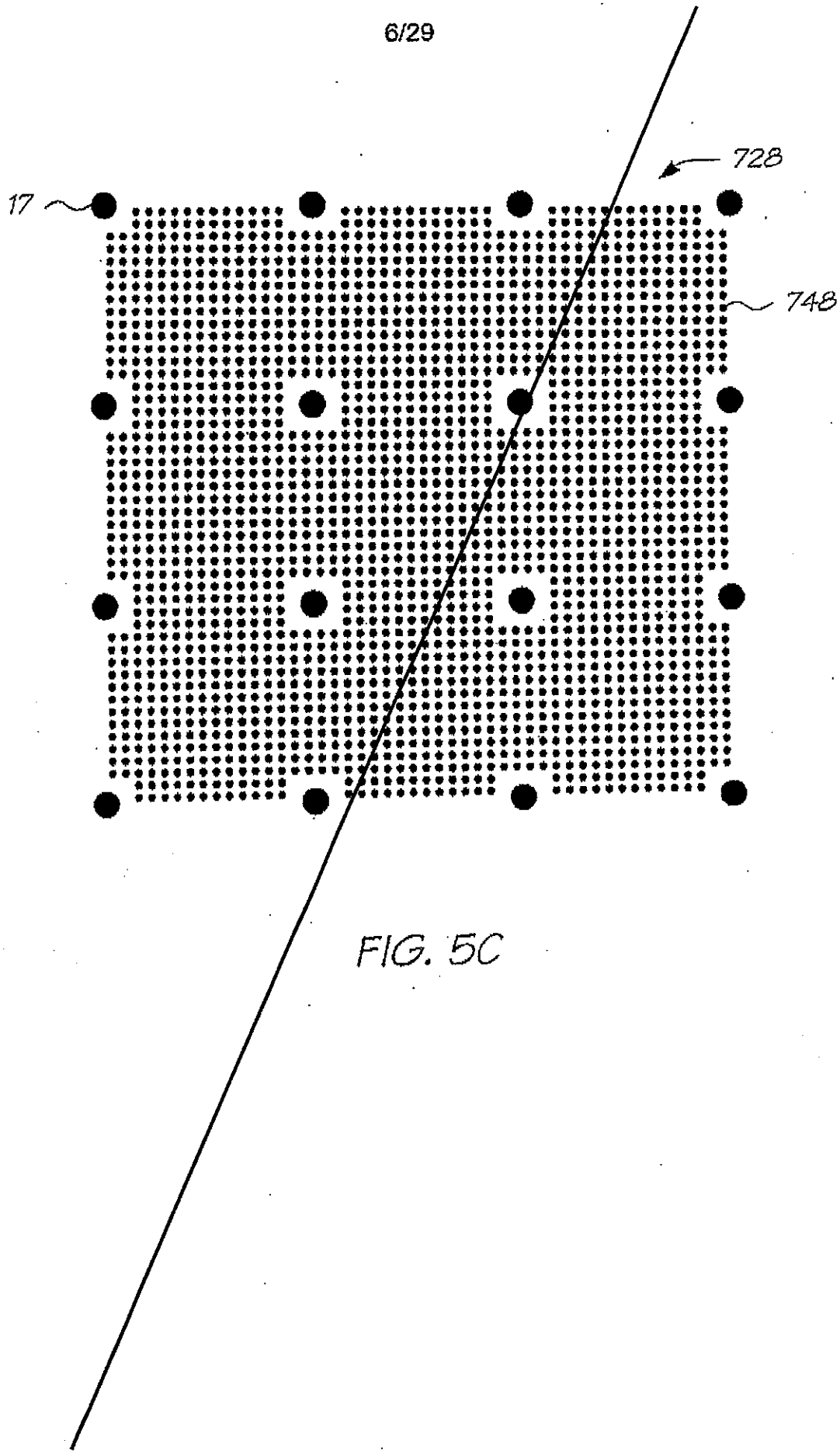

FIG. 5C

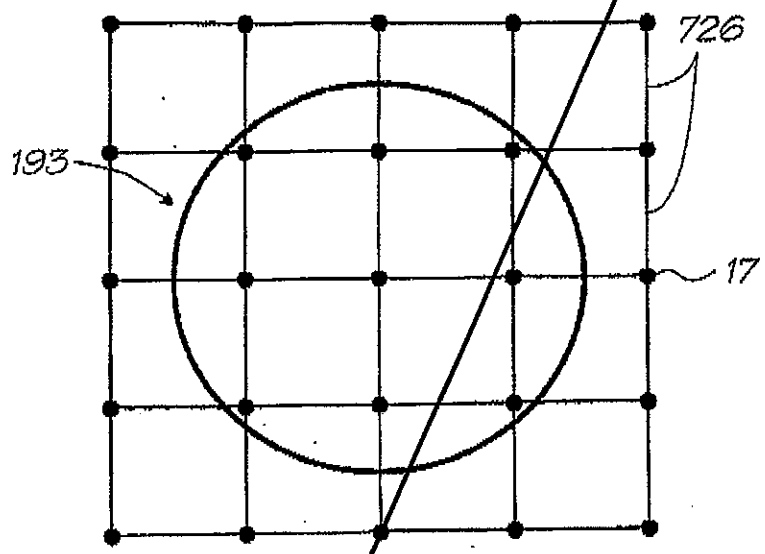

FIG. 5D

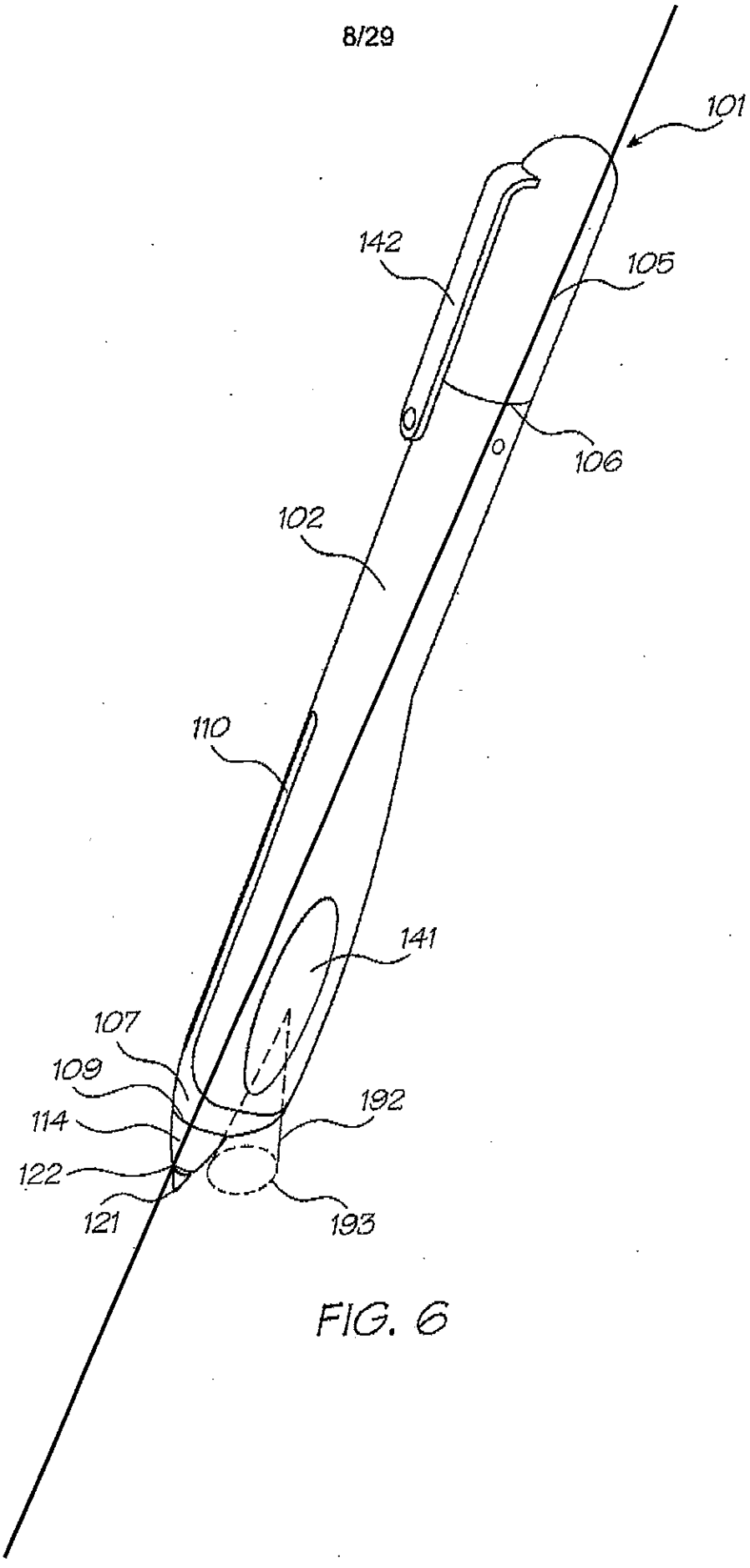

FIG. 6

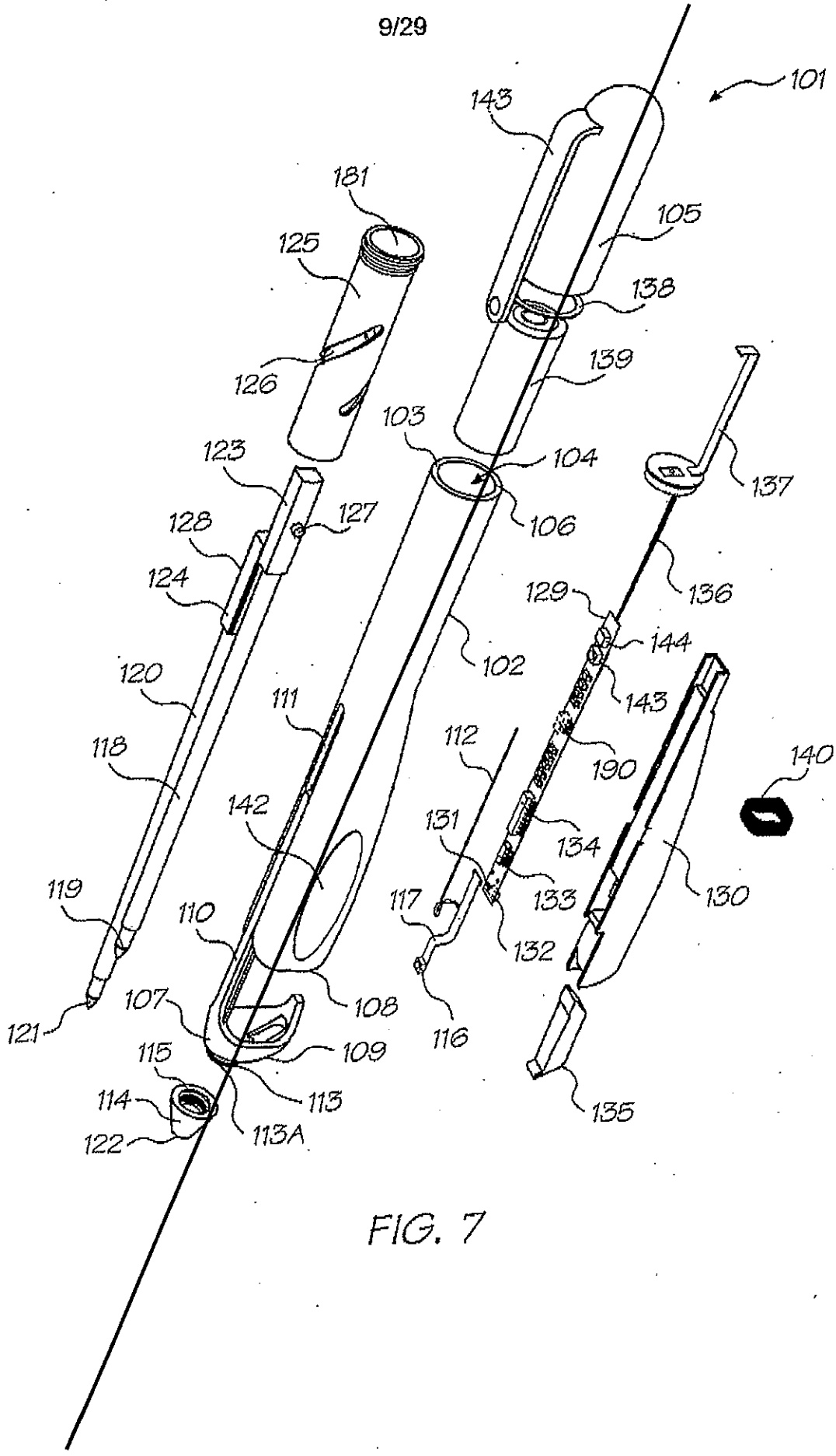
101
143
181
105
125
138
126
139
103
104
123
137
128
127
106
124
129
136
102
144
120
111
143
112
118
190
140
142
131
134
119
133
130
110
117
132
107
108
116
121
109
115
113
114
113A
122
135

FIG. 7

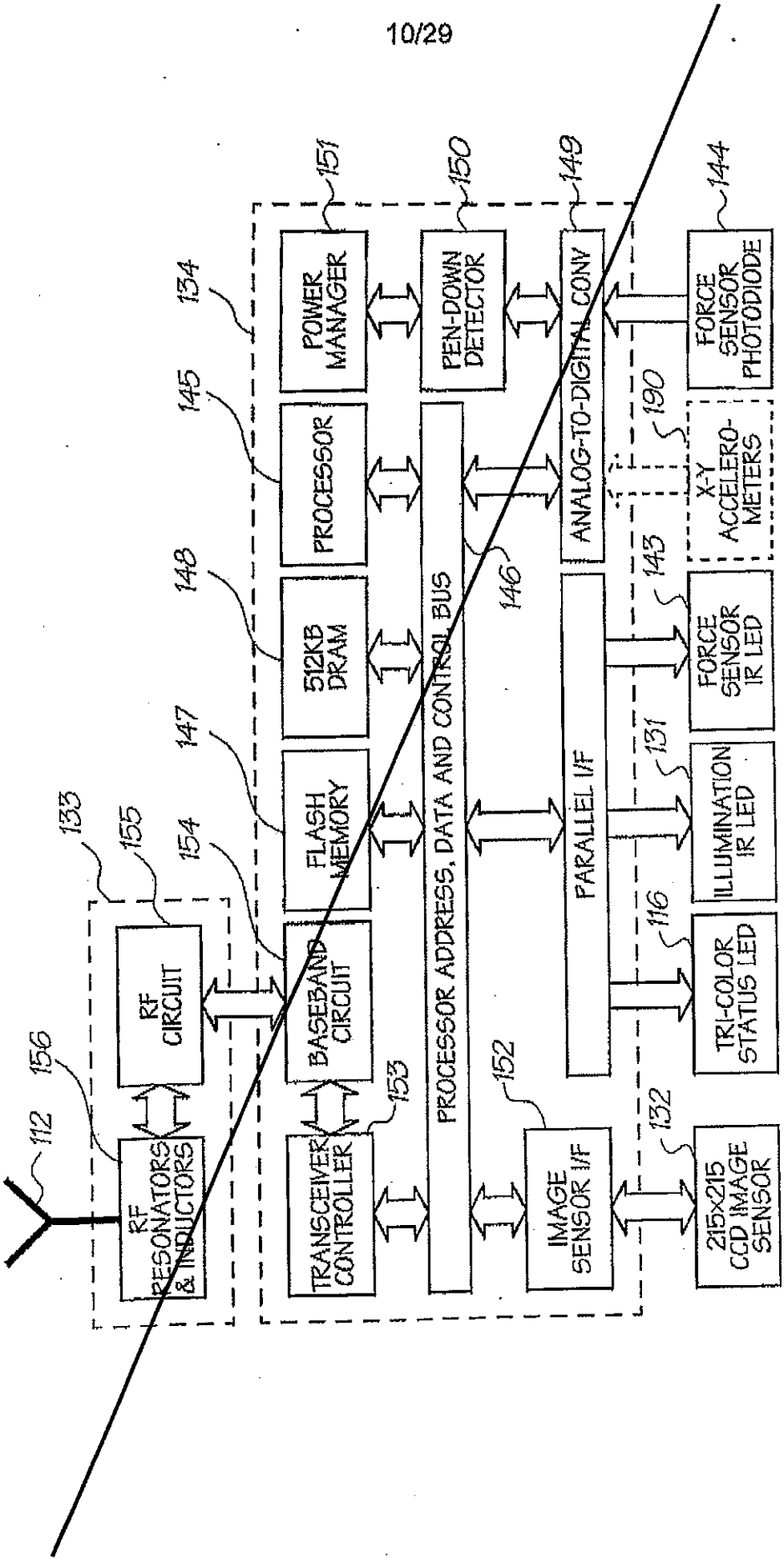
112
156
133
155
154
147
148
145
134
151
150
149
144
RF RESONATORS & INDUCTORS
RF CIRCUIT
BASEBAND CIRCUIT
FLASH MEMORY
512KB DRAM
PROCESSOR
POWER MANAGER
PEN-DOWN DETECTOR
ANALOG-TO-DIGITAL CONV
FORCE SENSOR PHOTODIODE
190
X-Y ACCELERO-METERS
143
FORCE SENSOR IR LED
131
ILLUMINATION IR LED
116
TRI-COLOR STATUS LED
153
TRANSCEIVER CONTROLLER
PROCESSOR ADDRESS, DATA AND CONTROL BUS
146
PARALLEL I/F
152
IMAGE SENSOR I/F
132
215x215 CCD IMAGE SENSOR

FIG. 8

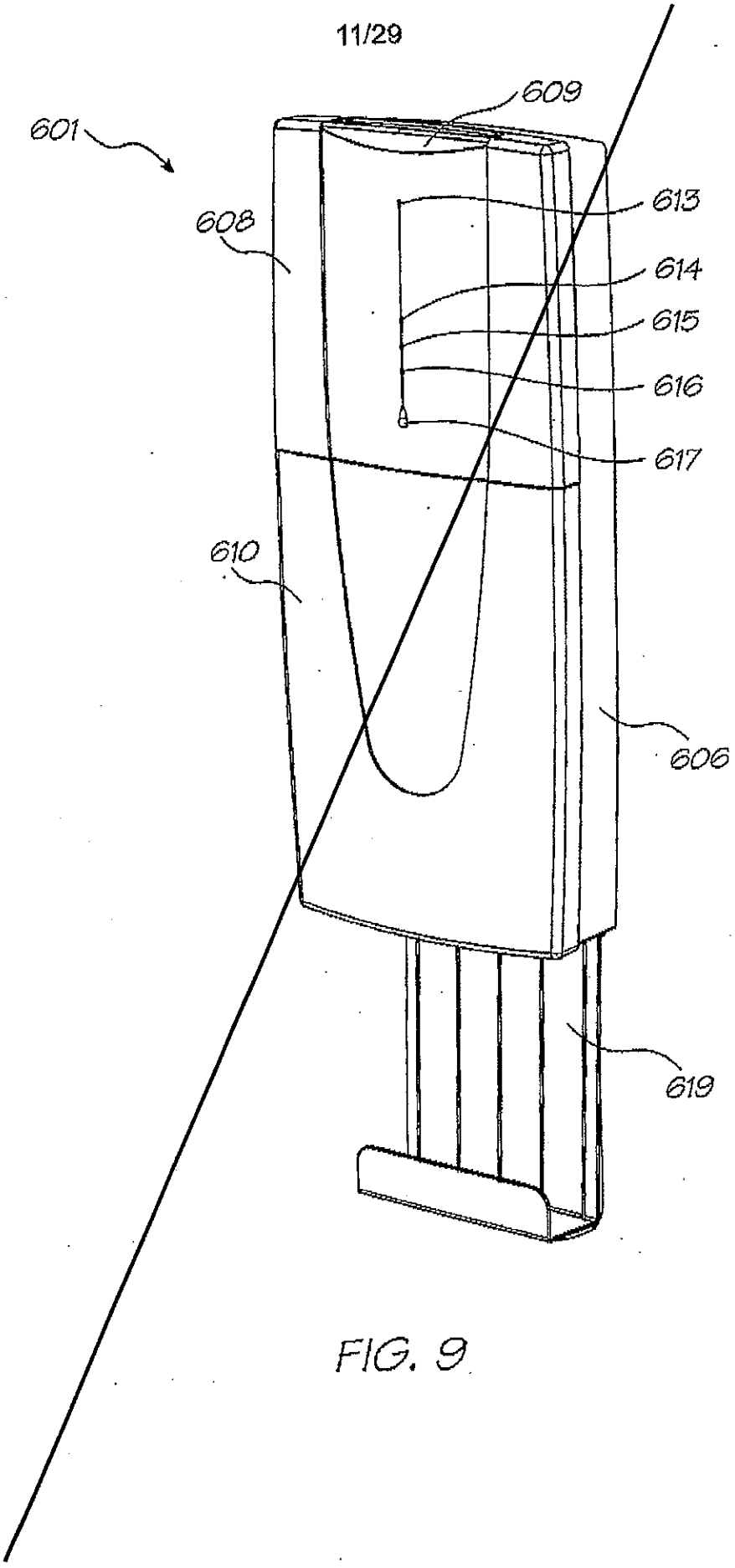

FIG. 9

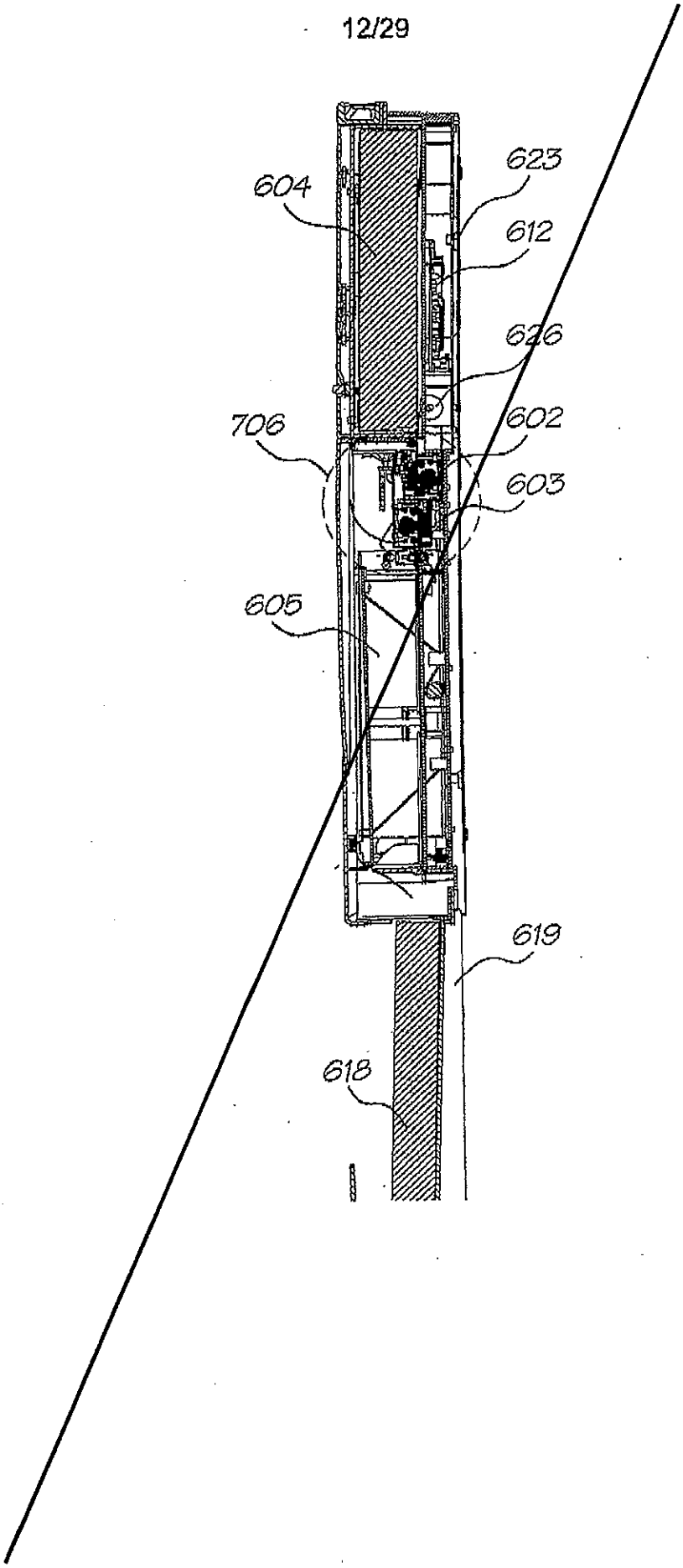
604
623
612
626
706
602
603
605
619
618

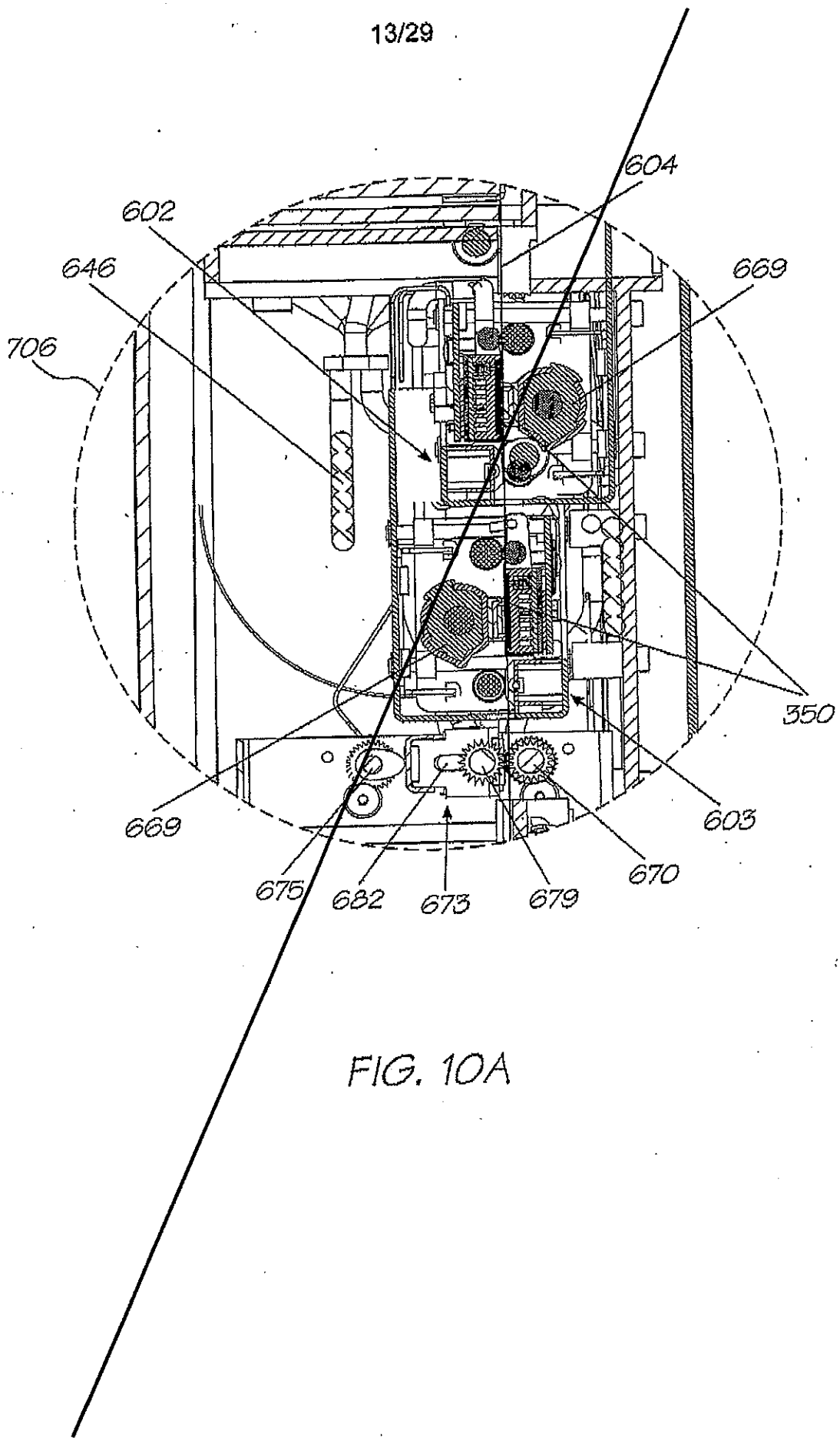

FIG. 10A

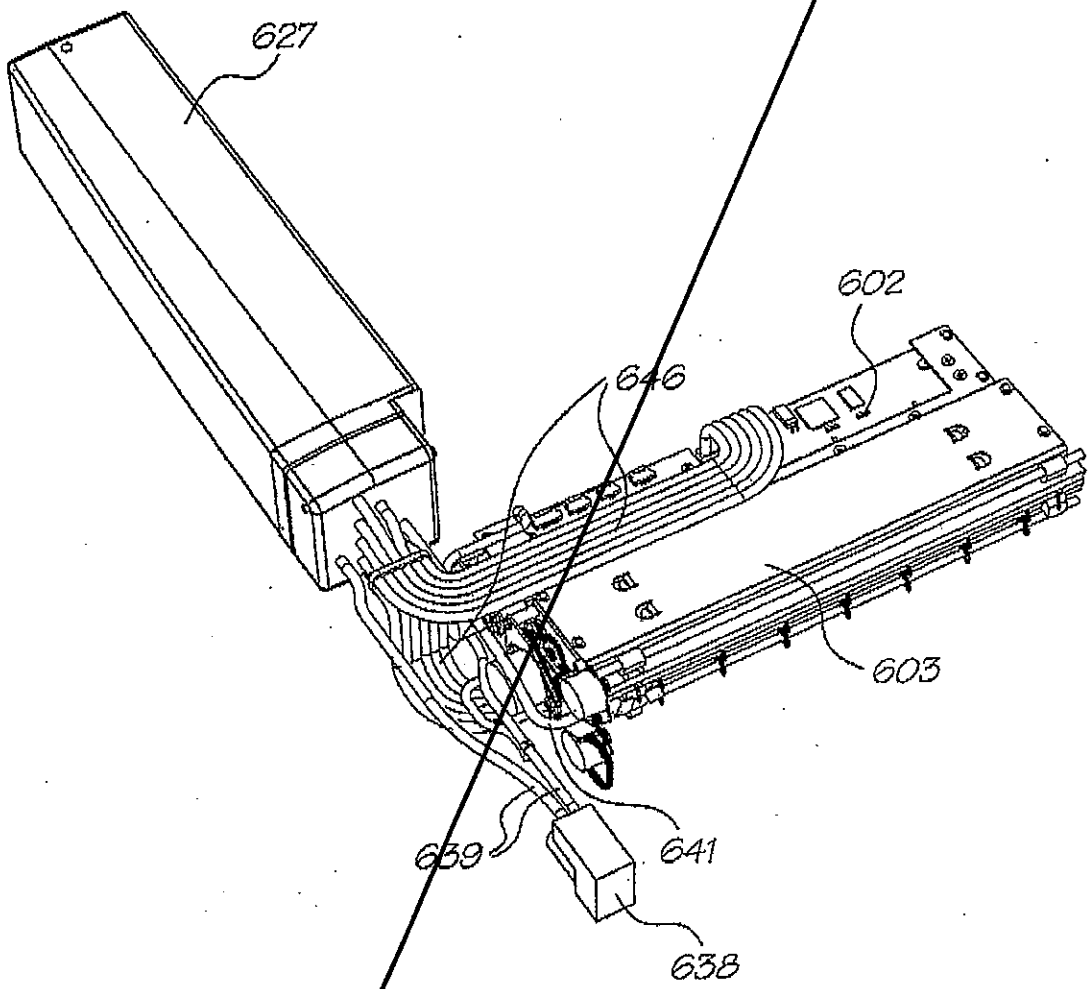

FIG. 11

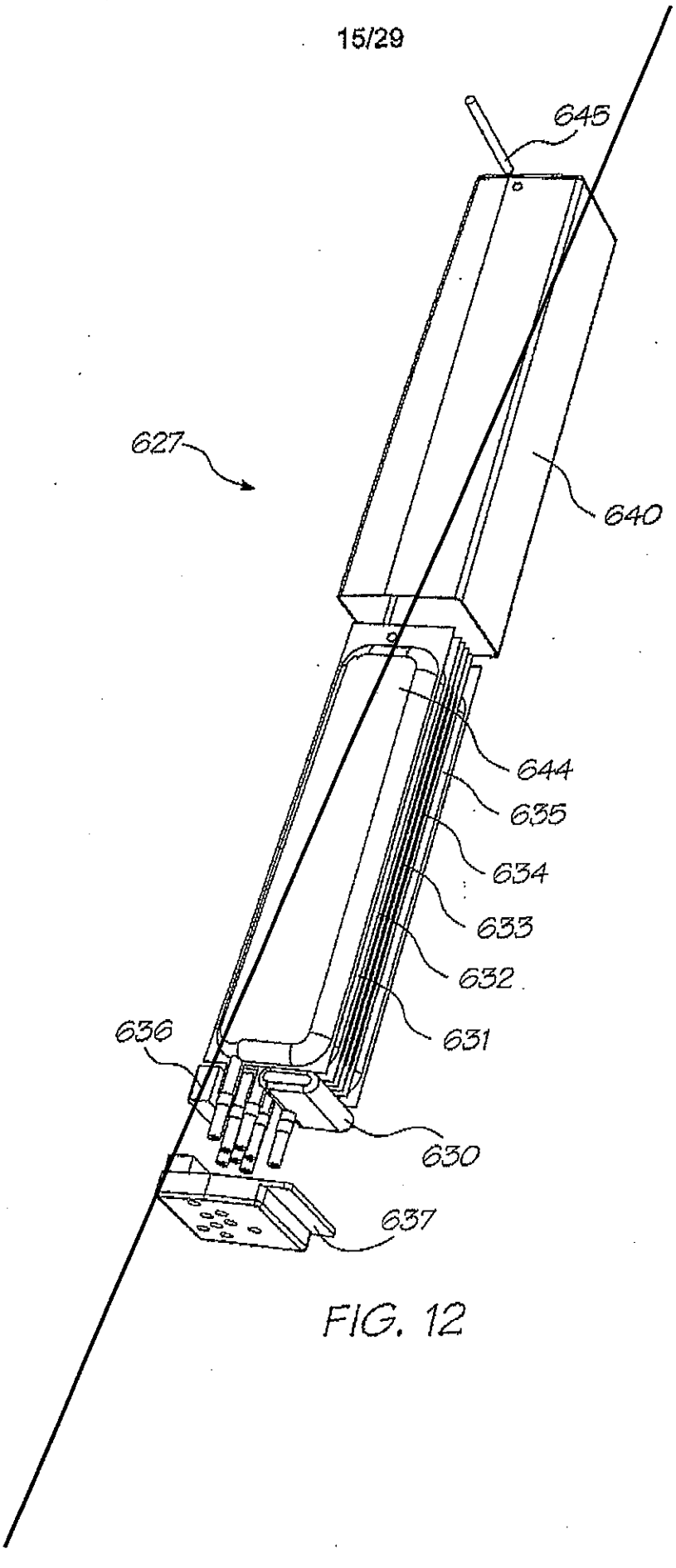

FIG. 12

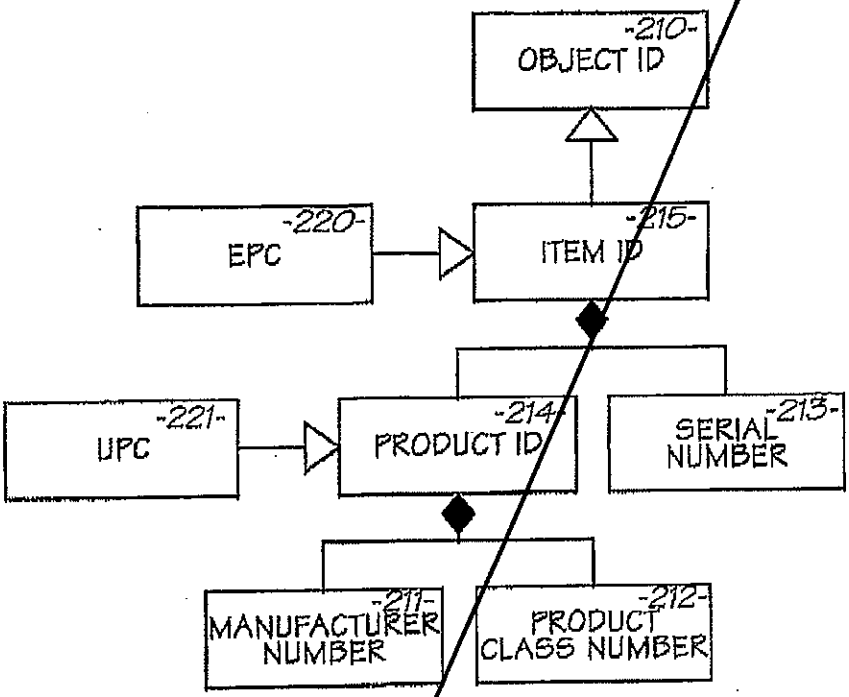
OBJECT ID
-210-
EPC
-220-
ITEM ID
-215-
UPC
-221-
PRODUCT ID
-214-
SERIAL NUMBER
-213-
MANUFACTURER NUMBER
-211-
PRODUCT CLASS NUMBER
-212-

FIG. 13

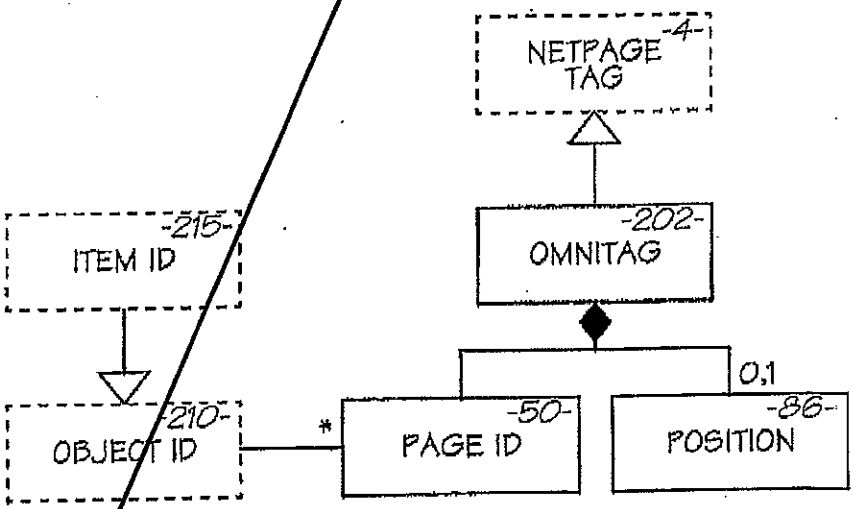
NETPAGE TAG
-4-
ITEM ID
-215-
OMNITAG
-202-
OBJECT ID
-210-
*
PAGE ID
-50-
0,1
POSITION
-86-

FIG. 14

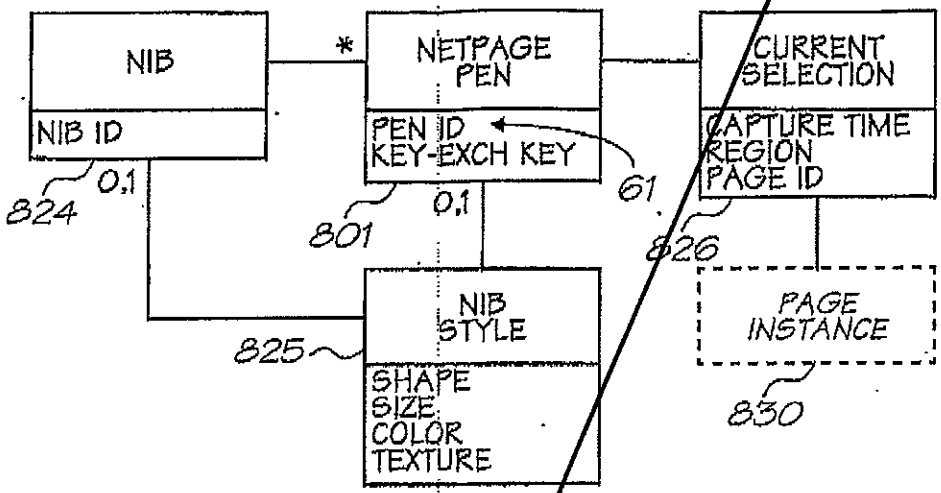
NIB
NIB ID
*
NETPAGE PEN
PEN ID
KEY-EXCH KEY
CURRENT SELECTION
CAPTURE TIME
REGION
PAGE ID
0,1
824
801
0,1
61
826
NIB STYLE
SHAPE
SIZE
COLOR
TEXTURE
825
PAGE INSTANCE
830

FIG. 15

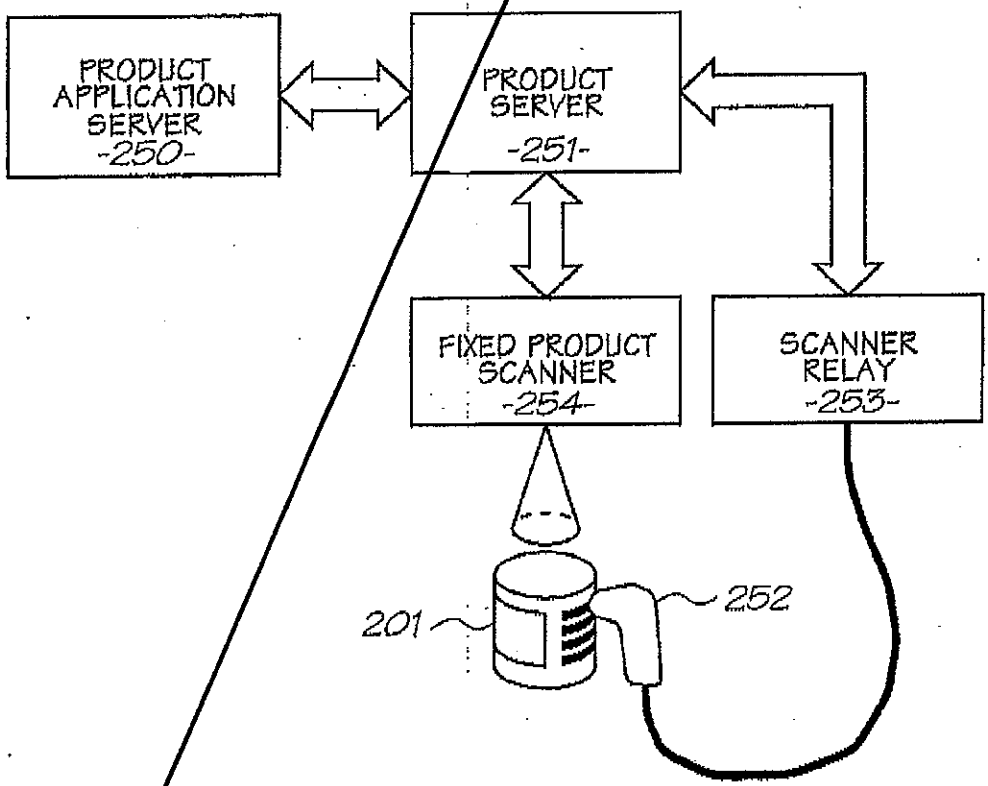
PRODUCT APPLICATION SERVER -250-
PRODUCT SERVER -251-
FIXED PRODUCT SCANNER -254-
SCANNER RELAY -253-
201
252

FIG. 16

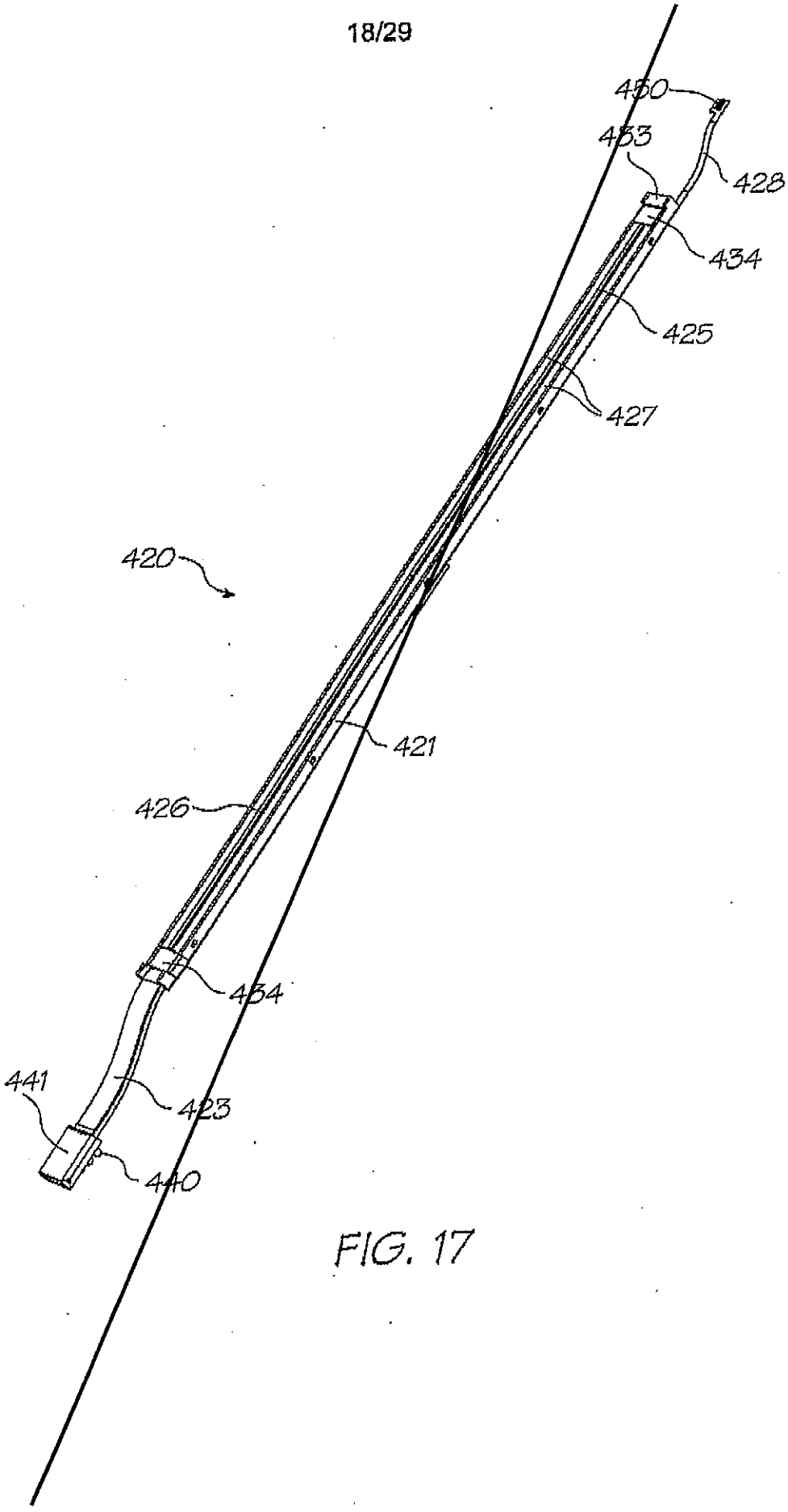

FIG. 17

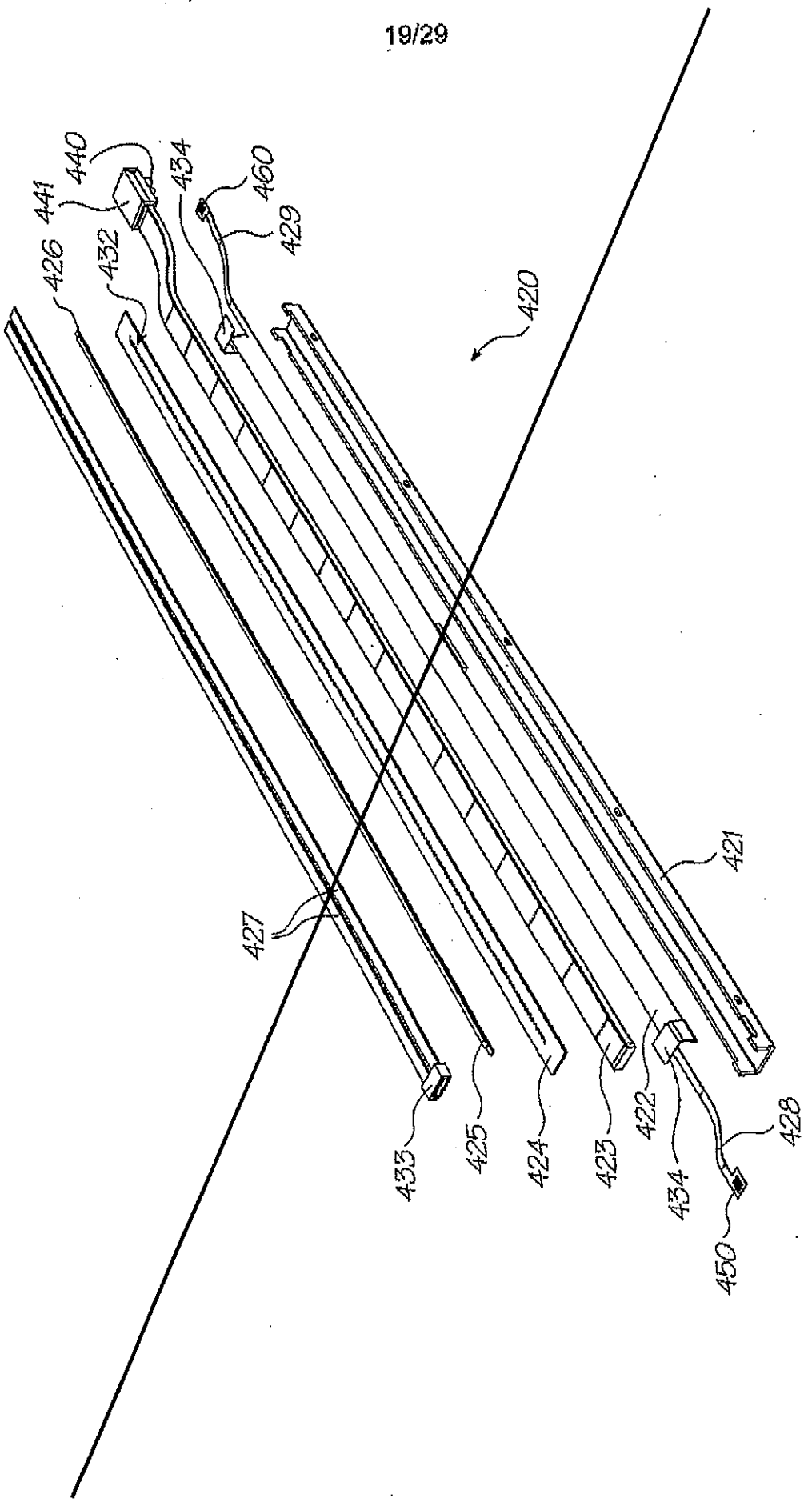
441
440
434
460
429
426
432
420
427
421
433
425
424
423
422
434
428
450

FIG. 18

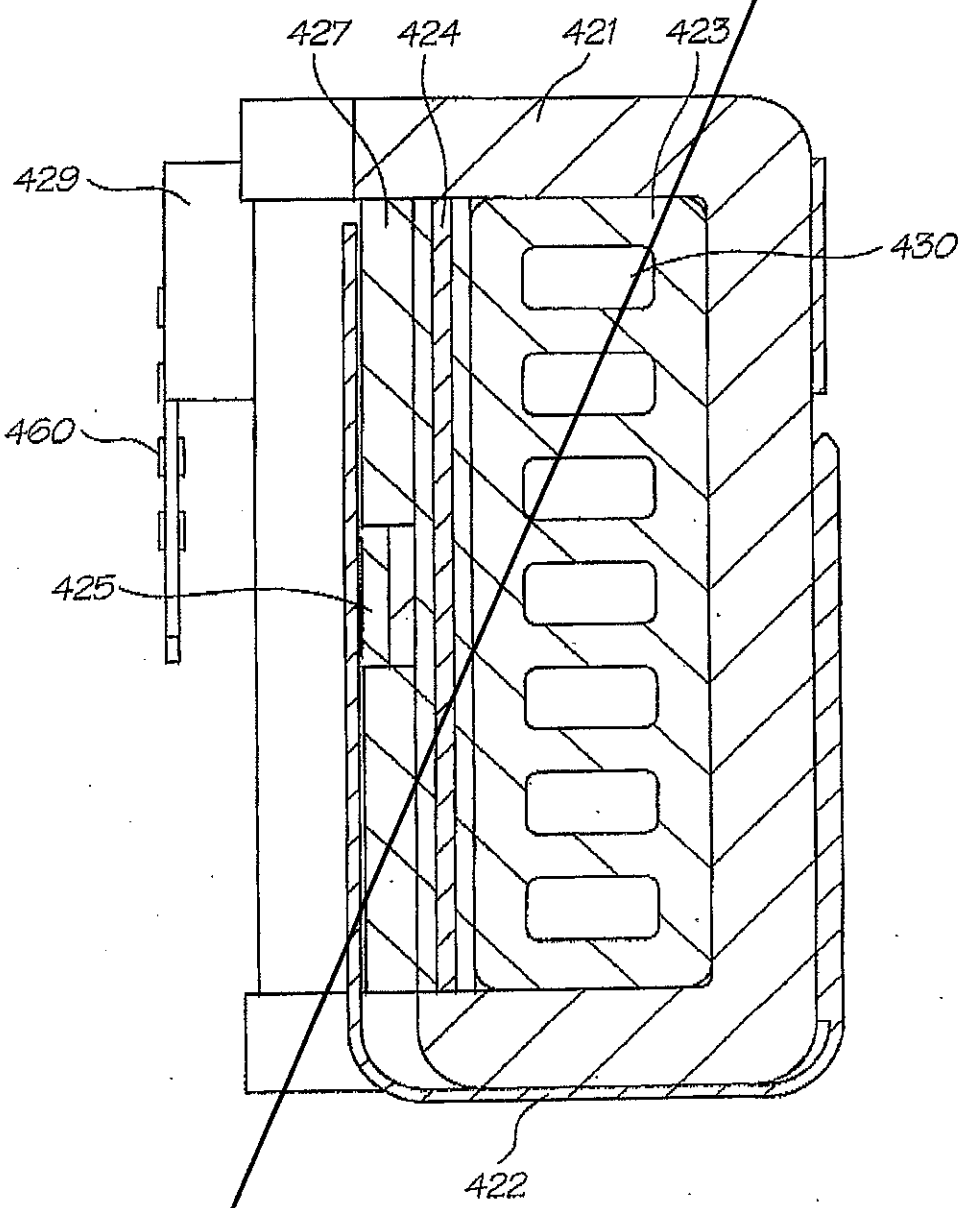

FIG. 19

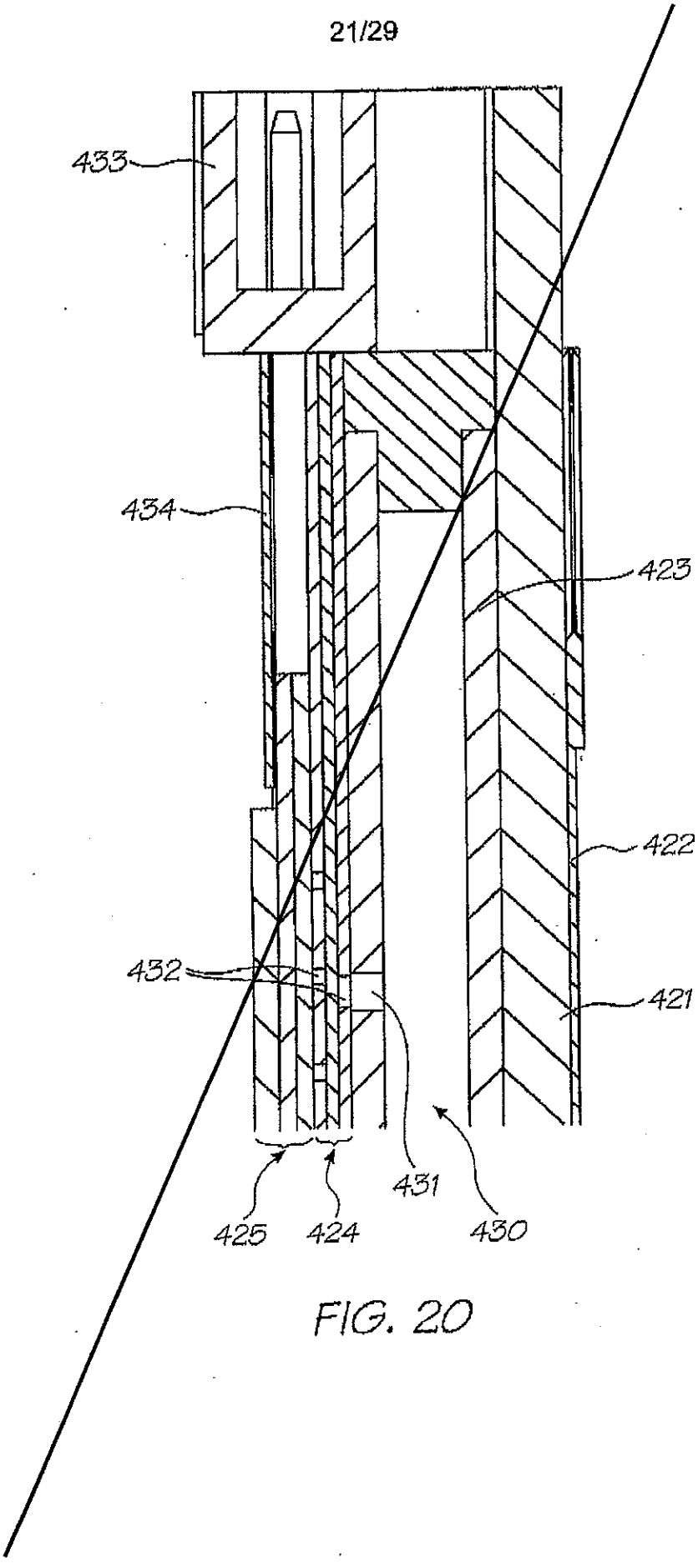

FIG. 20

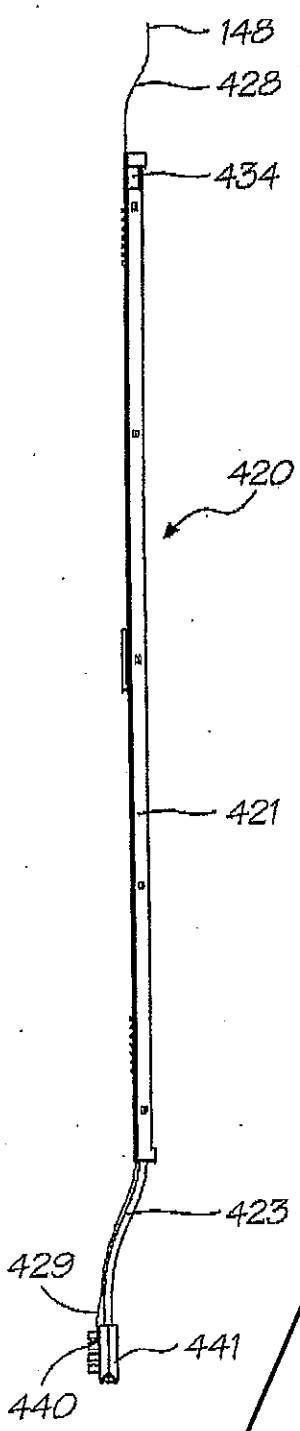

FIG. 21(A)

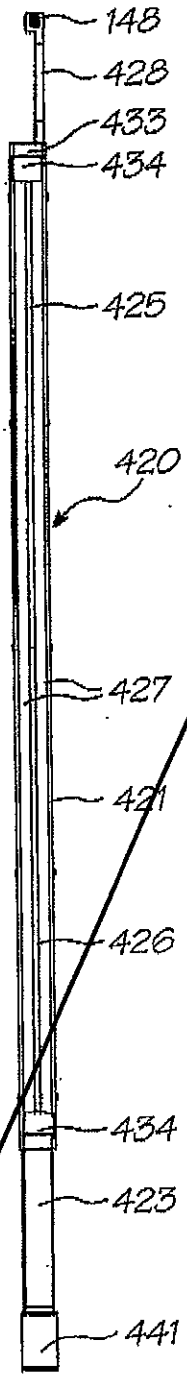

FIG. 21(B)

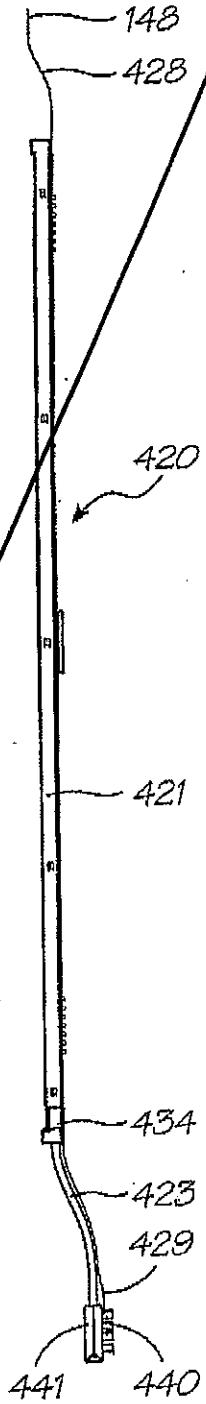

FIG. 21(C)

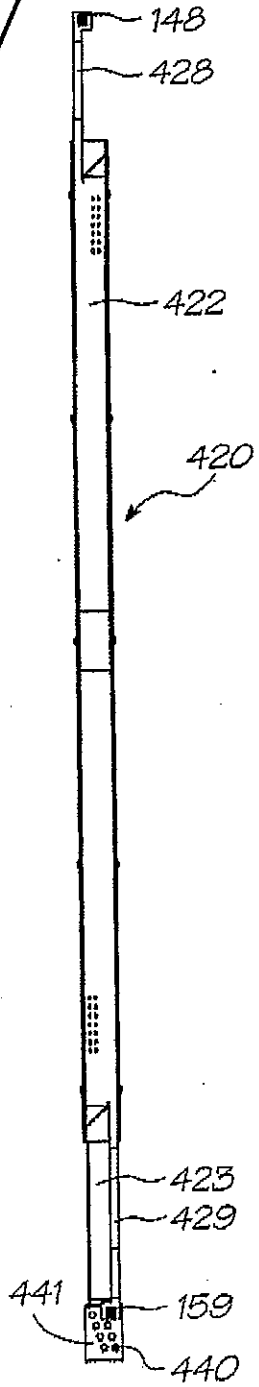

FIG. 21(D)

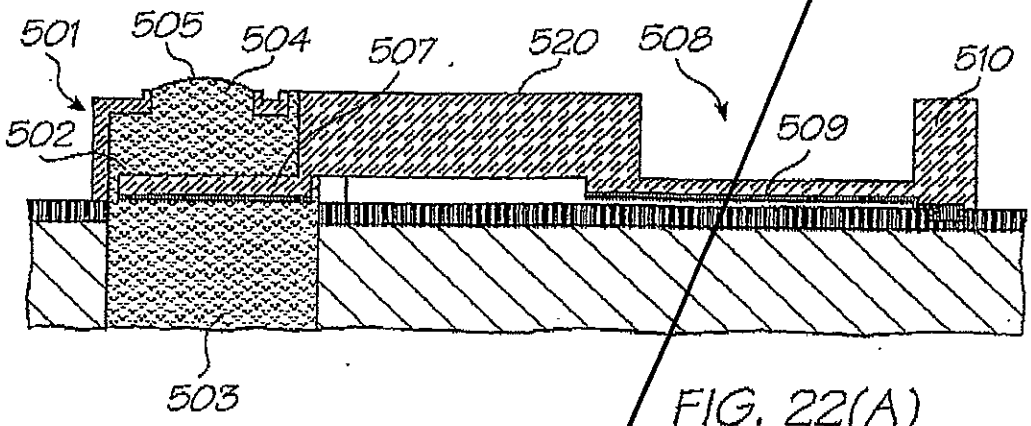

FIG. 22(A)

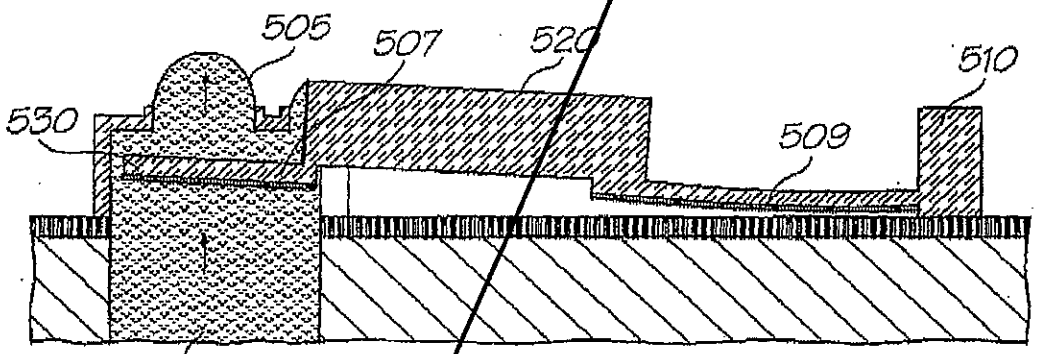

FIG. 22(B)

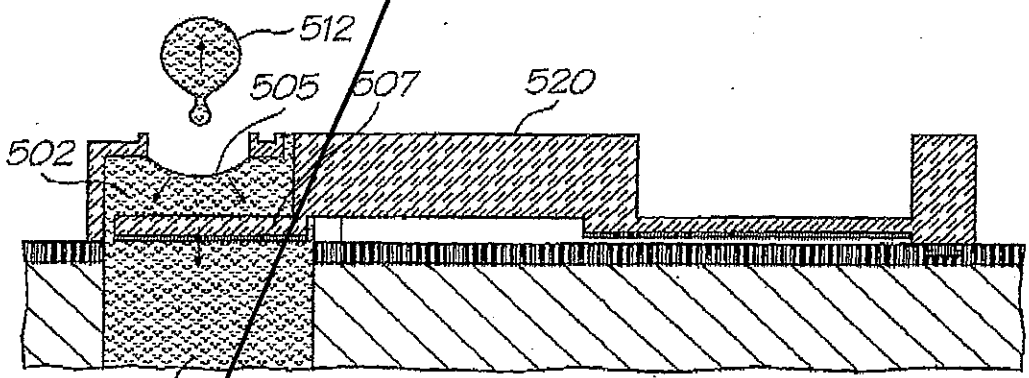

FIG. 22(C)

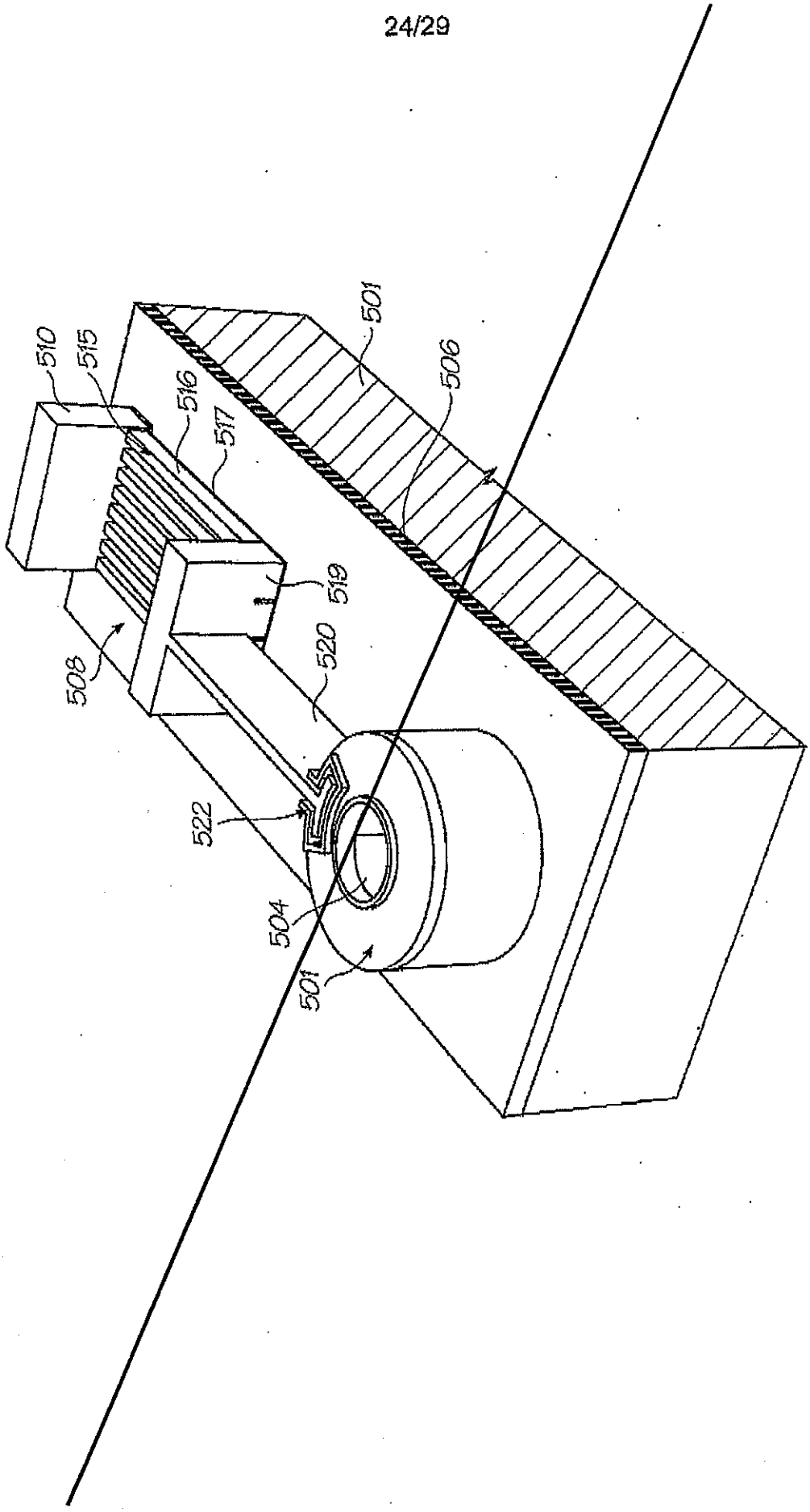

FIG. 23

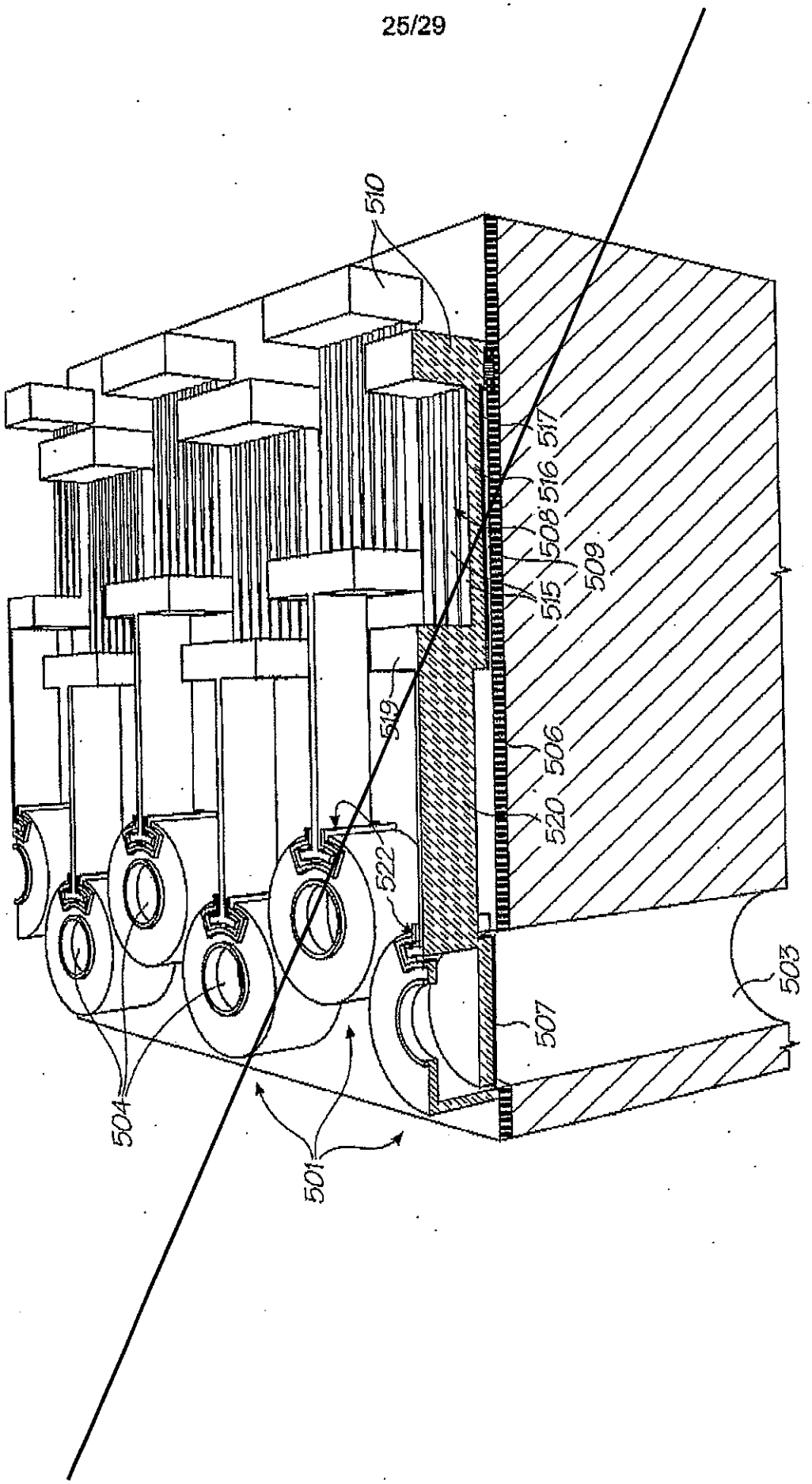

FIG. 24

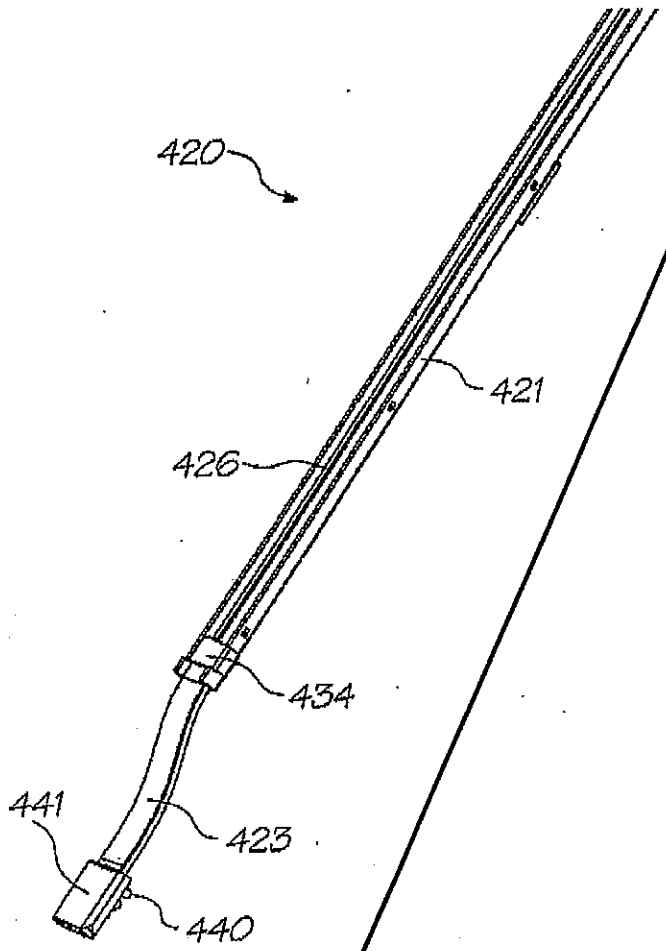

FIG. 25

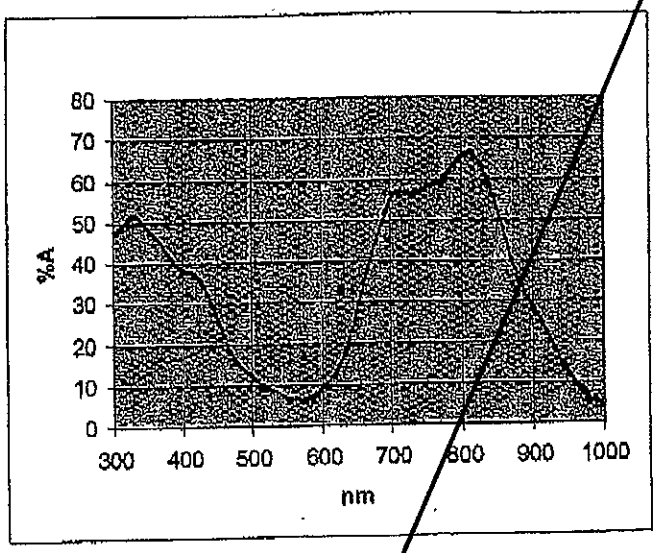
%A
80
70
60
50
40
30
20
10
0
300
400
500
600
700
800
900
1000
nm

FIG. 26

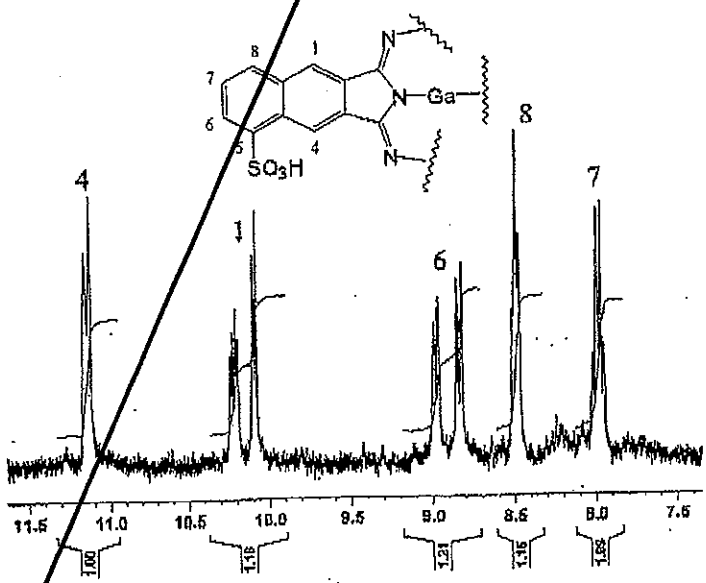
N
Ga
N
N
SO3H
8
1
7
6
5
4
4
1
6
8
7
11.5
11.0
10.5
10.0
9.5
9.0
8.5
8.0
7.5
1.00
1.16
1.21
1.15
1.88

FIG. 27

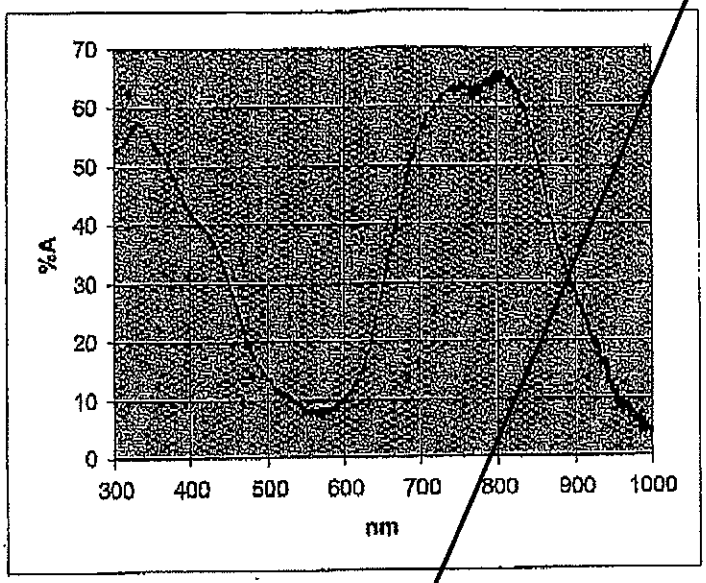
70
60
50
40
30
20
10
0
%A
300
400
500
600
700
800
900
1000
nm

FIG. 28

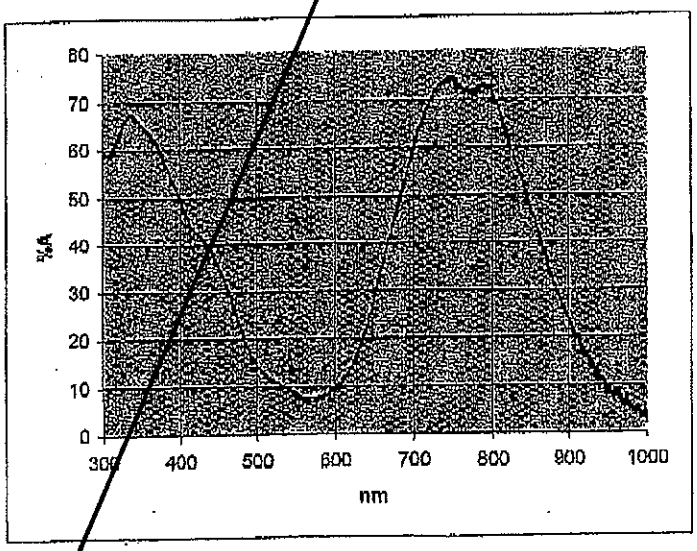
80
70
60
50
40
30
20
10
0
%A
400
500
600
700
800
900
1000
nm

FIG. 29

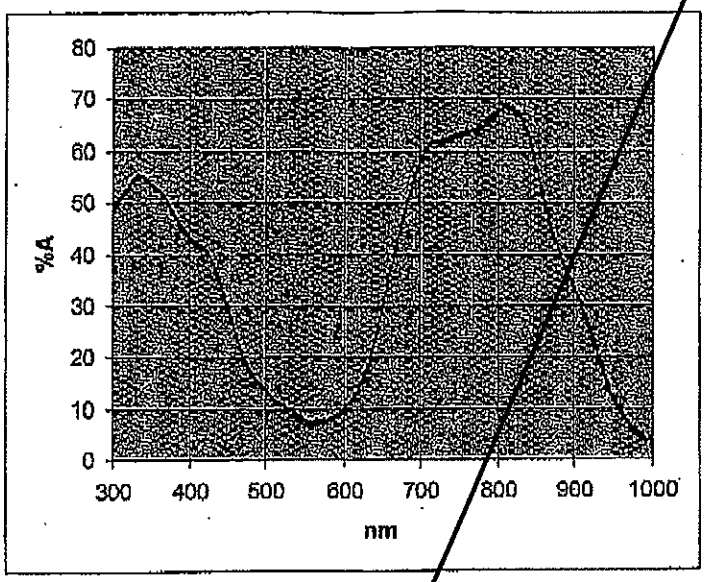
80
70
60
50
40
30
20
10
0
%A
300
400
500
600
700
800
900
1000
nm

FIG. 30

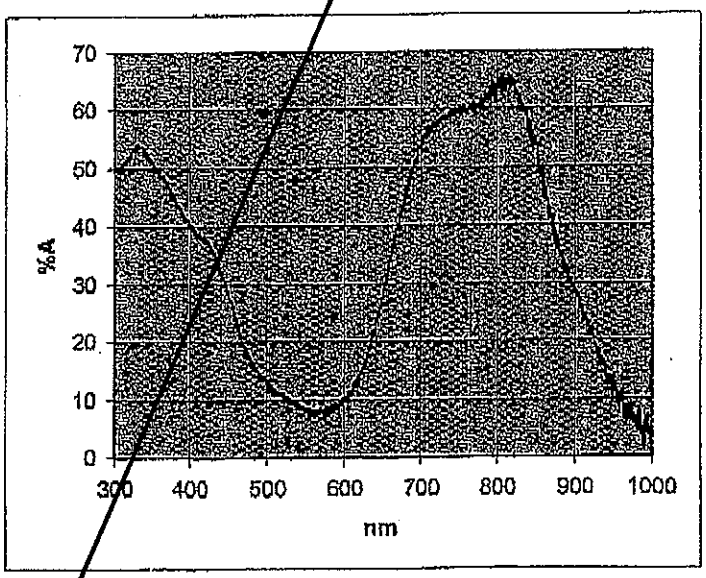
70
60
50
40
30
20
10
0
%A
300
400
500
600
700
800
900
1000
nm

FIG. 31

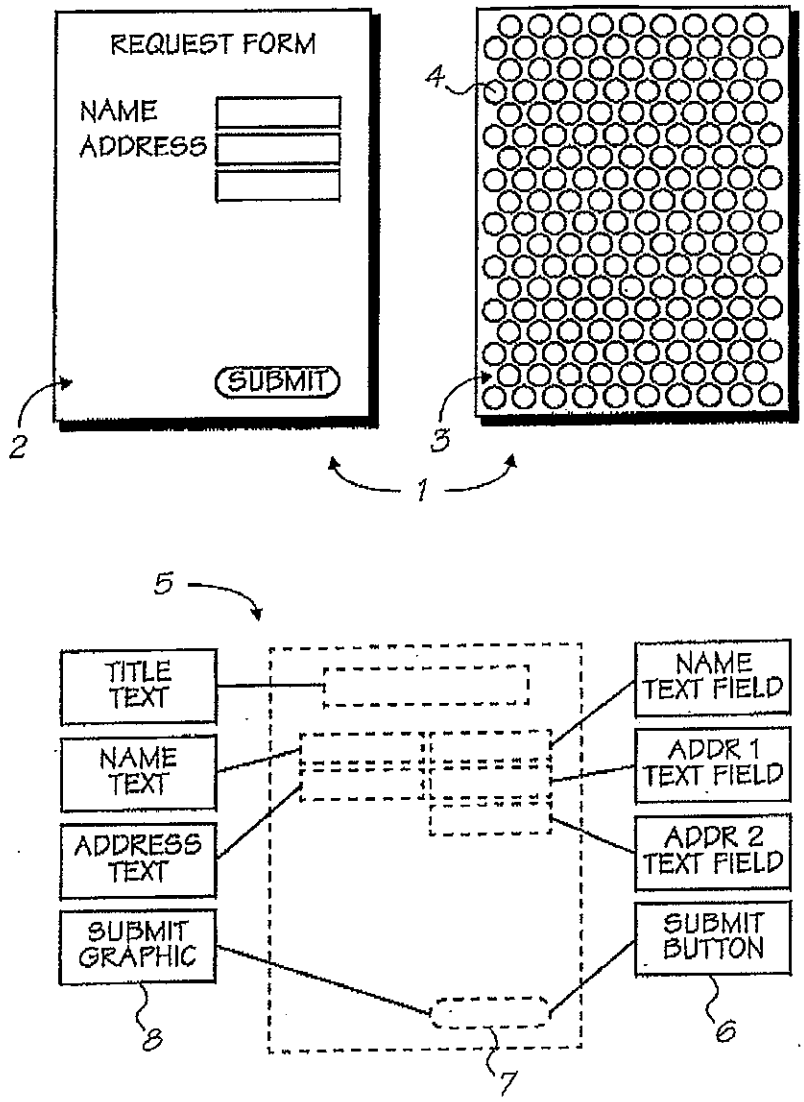
REQUEST FORM
NAME
ADDRESS
SUBMIT
2
4
3
1
5
TITLE TEXT
NAME TEXT
ADDRESS TEXT
SUBMIT GRAPHIC
8
NAME TEXT FIELD
ADDR 1 TEXT FIELD
ADDR 2 TEXT FIELD
SUBMIT BUTTON
6
7

FIG. 1

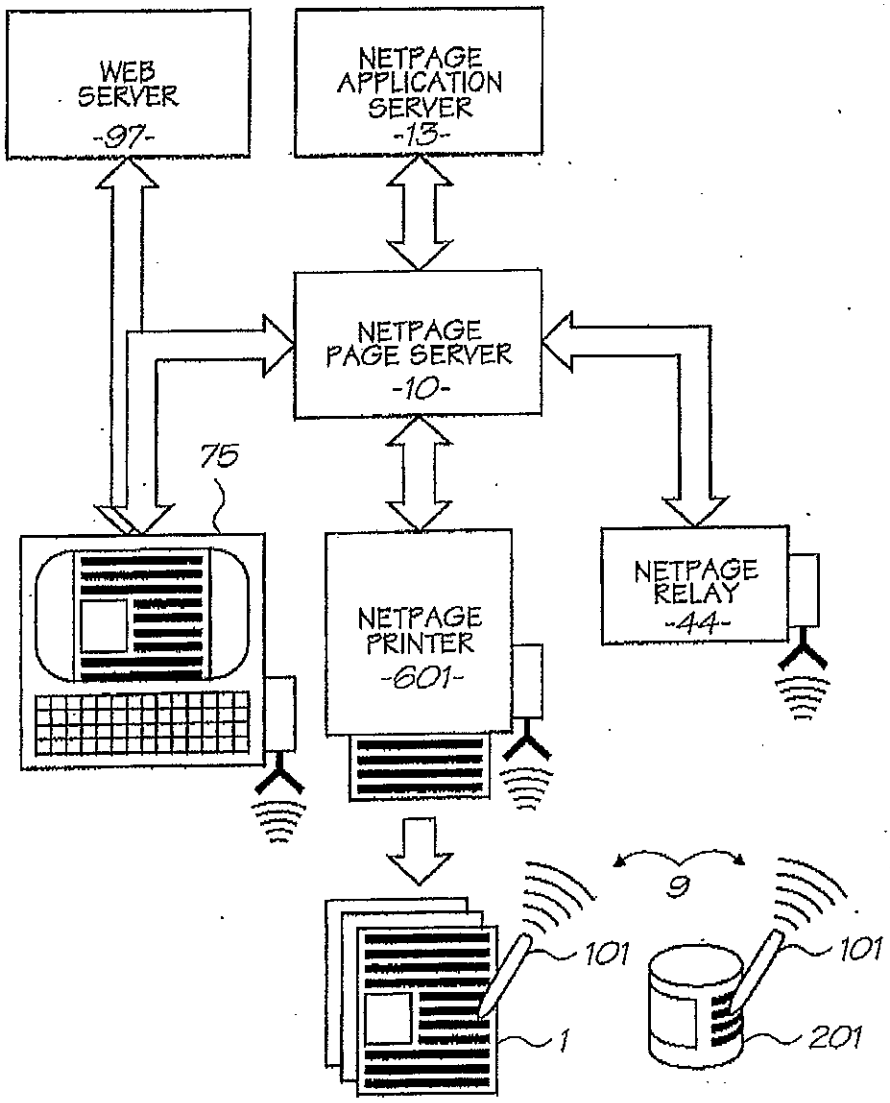
WEB SERVER -97-
NETPAGE APPLICATION SERVER -13-
NETPAGE PAGE SERVER -10-
75
NETPAGE PRINTER -601-
NETPAGE RELAY -44-
9
101
101
1
201

FIG. 2

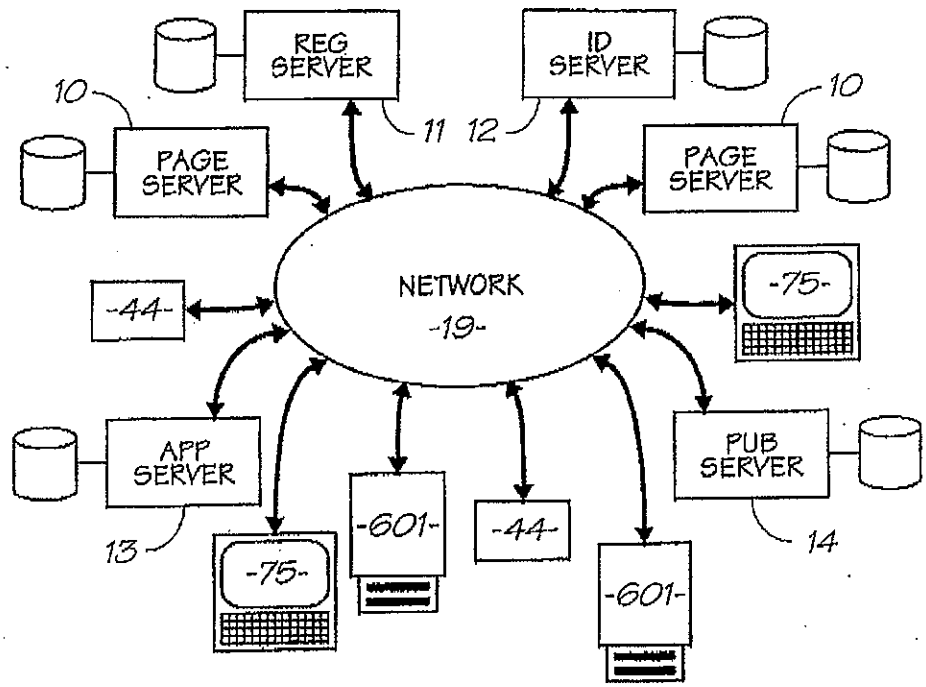
REG SERVER
ID SERVER
10
10
PAGE SERVER
PAGE SERVER
11
12
NETWORK
-19-
-44-
-75-
APP SERVER
PUB SERVER
13
14
-601-
-44-
-75-
-601-

FIG. 3

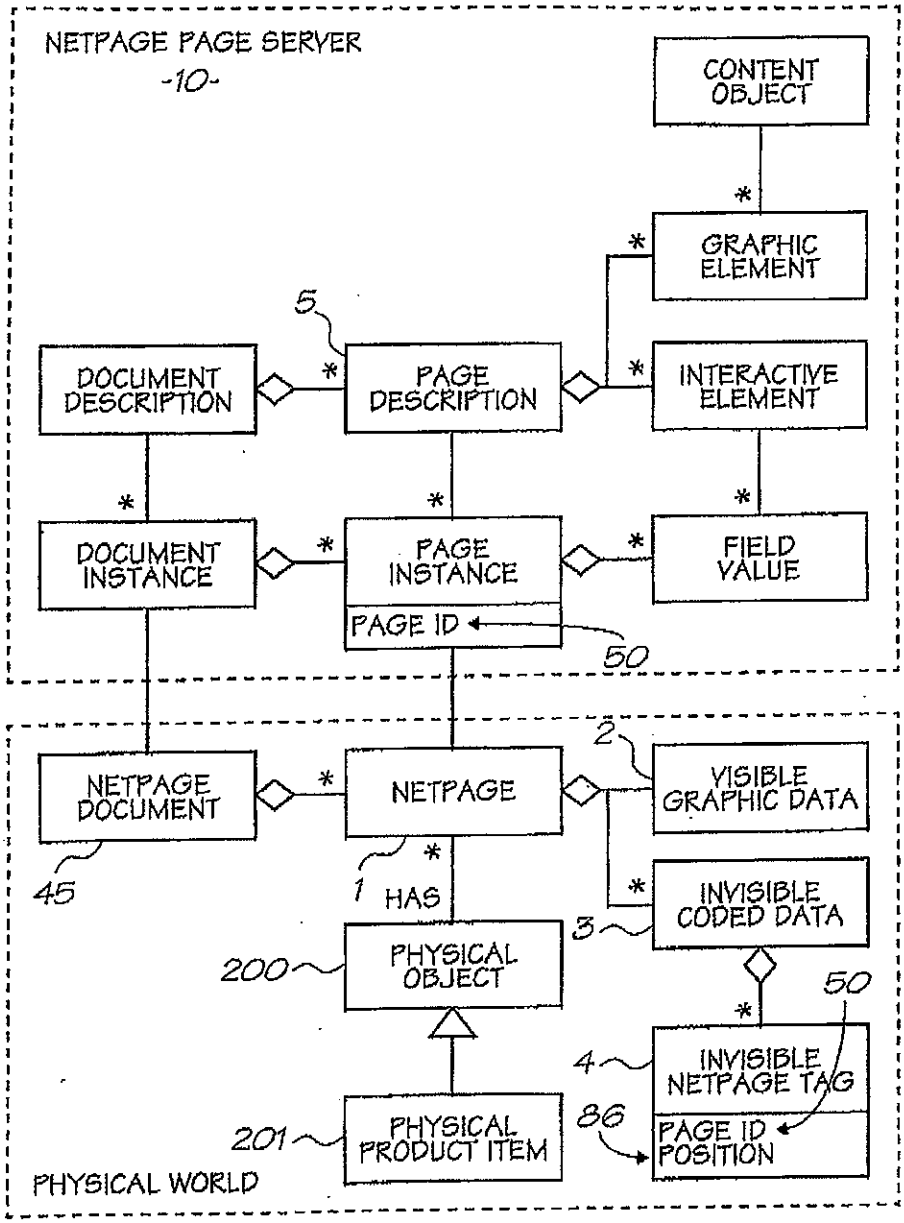
NETPAGE PAGE SERVER
-10-
CONTENT OBJECT
GRAPHIC ELEMENT
5
DOCUMENT DESCRIPTION
PAGE DESCRIPTION
INTERACTIVE ELEMENT
DOCUMENT INSTANCE
PAGE INSTANCE
FIELD VALUE
PAGE ID
50
2
NETPAGE DOCUMENT
NETPAGE
VISIBLE GRAPHIC DATA
45
1
HAS
INVISIBLE CODED DATA
3
200
PHYSICAL OBJECT
50
4
INVISIBLE NETPAGE TAG
86
PAGE ID
POSITION
201
PHYSICAL PRODUCT ITEM
PHYSICAL WORLD

FIG. 4

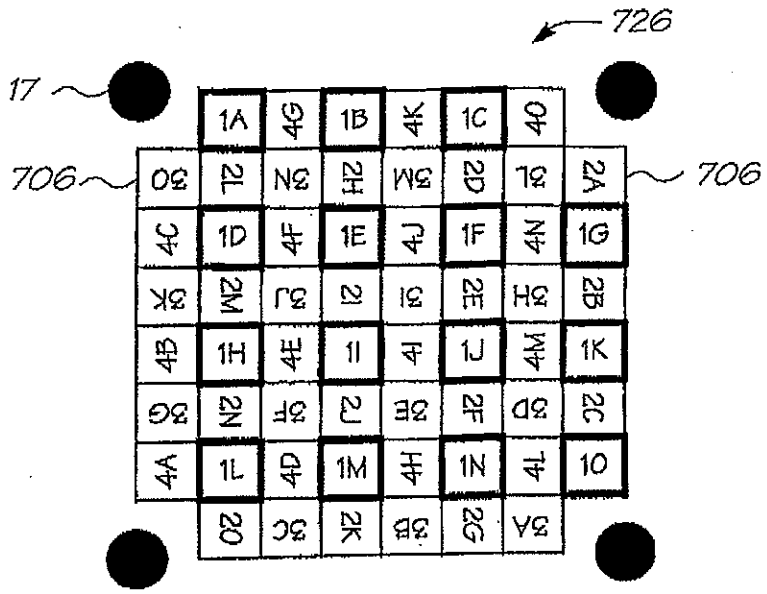
726
17
706
706
1A 4G 1B 4K 1C 4O
3O 2L 3N 2H 3M 2D 3L 2A
4C 1D 4F 1E 4J 1F 4N 1G
3K 2M 3J 2I 3I 2E 3H 2B
4B 1H 4E 1I 4I 1J 4M 1K
3G 2N 3F 2J 3E 2F 3D 2C
4A 1L 4D 1M 4H 1N 4L 1O
2O 3C 2K 3B 2G 3A

FIG. 5A

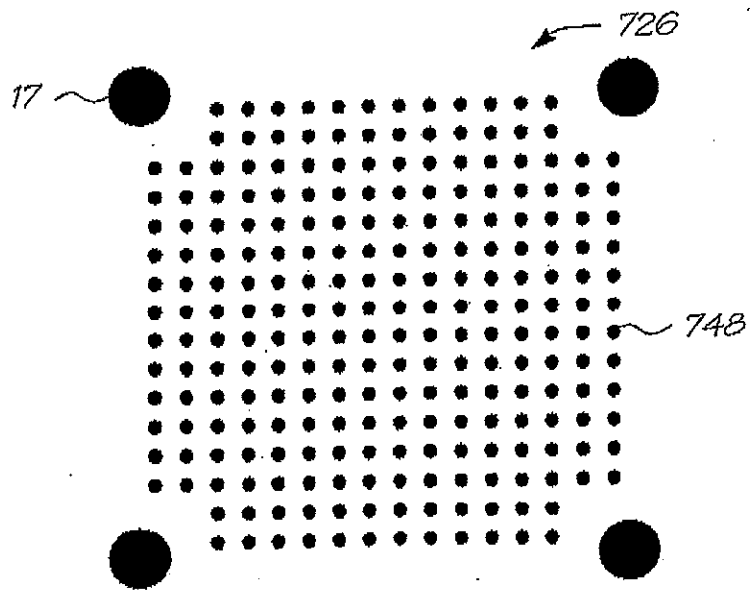
726
17
748

FIG. 5B

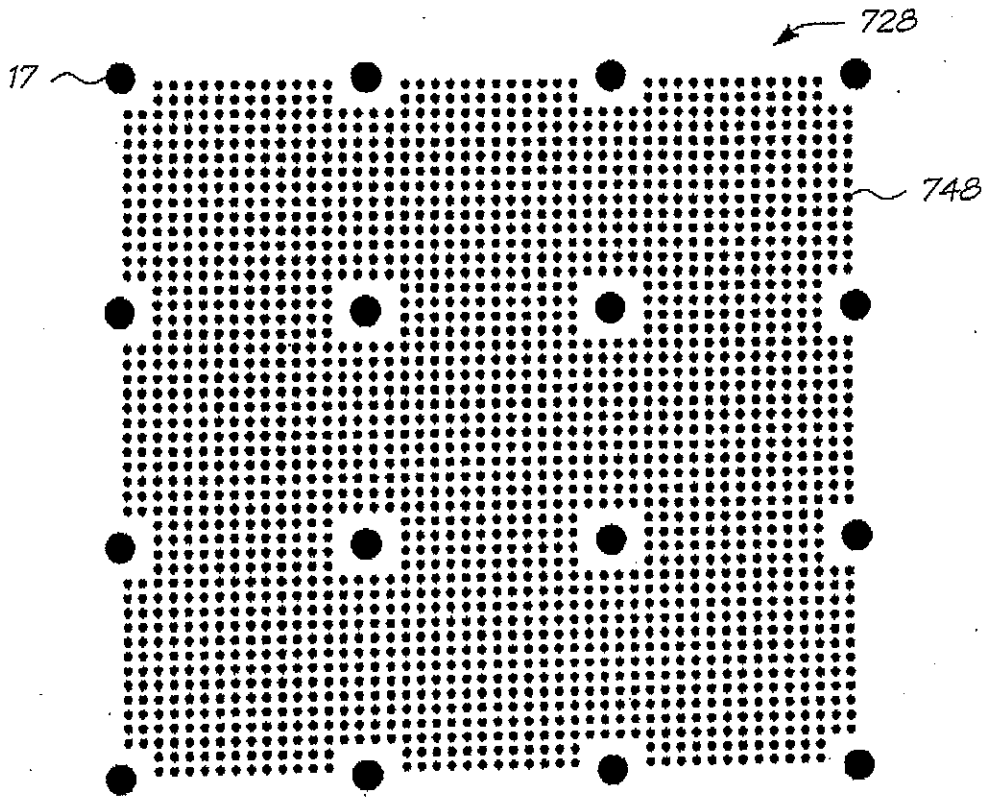

FIG. 5C

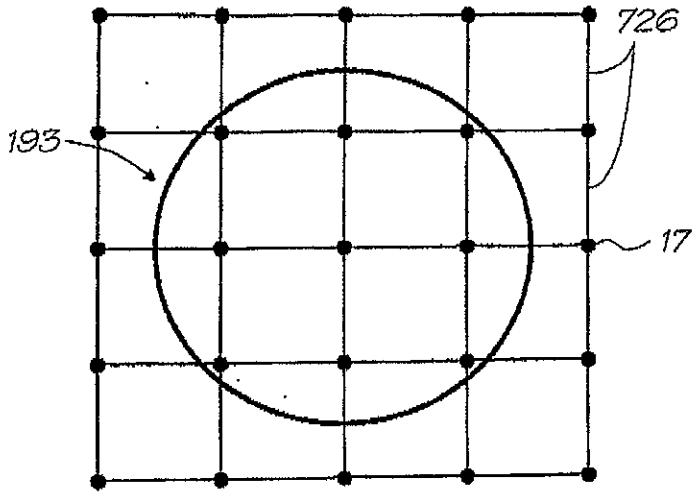

FIG. 5D

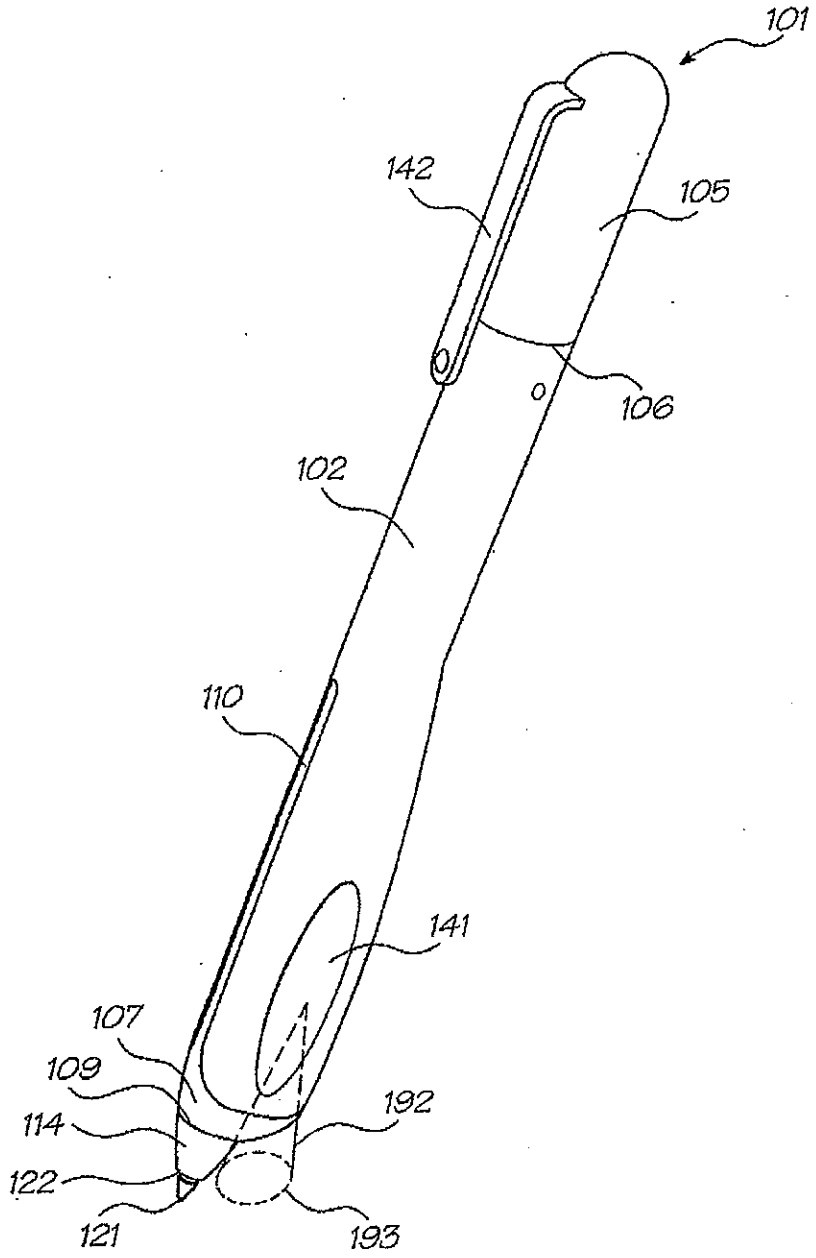

FIG. 6

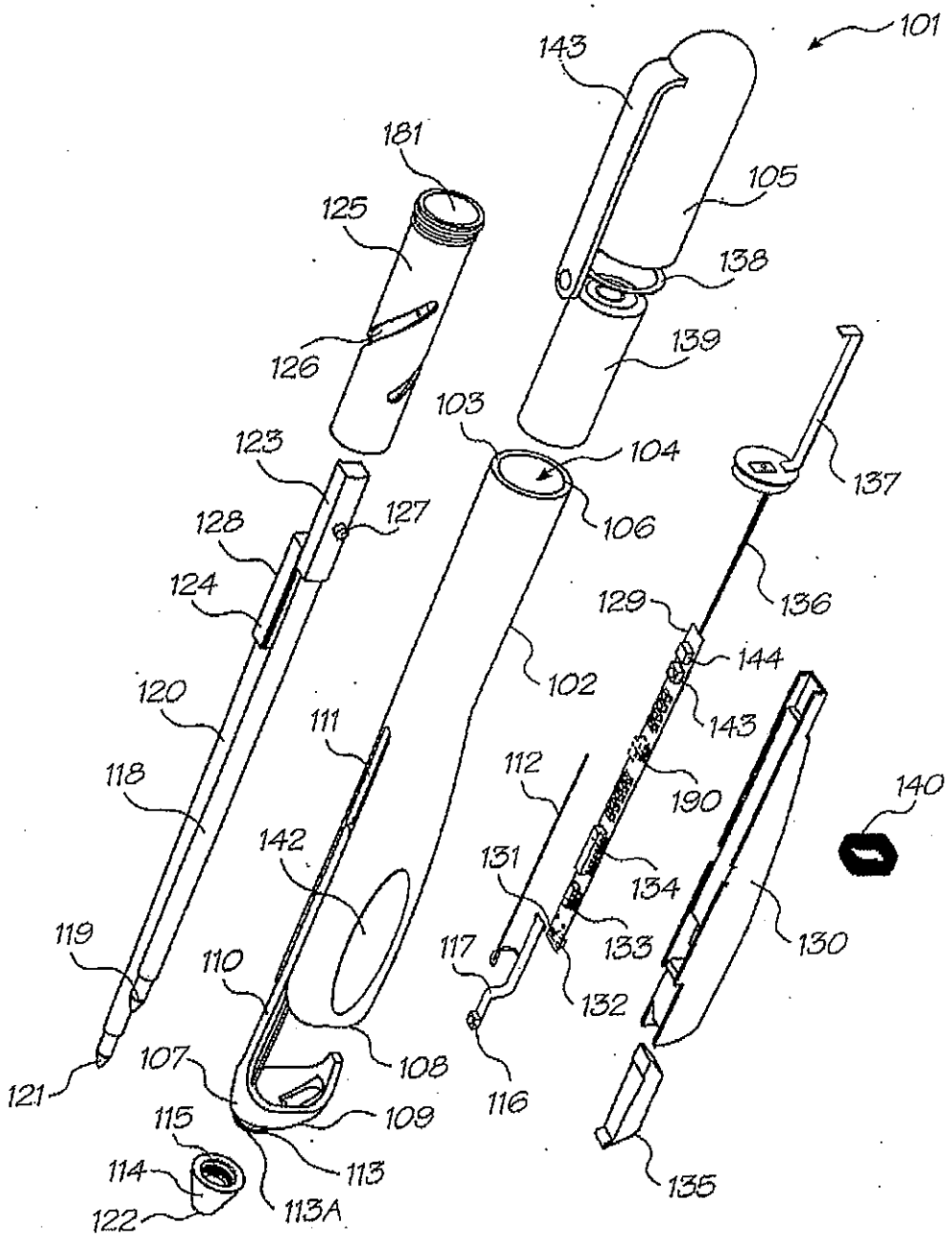
101
143
181
105
125
138
126
139
103
104
123
137
127
106
128
136
124
129
144
102
120
143
111
112
190
118
140
142
131
134
133
130
119
117
110
132
108
107
116
121
109
115
113
114
135
122
113A

FIG. 7

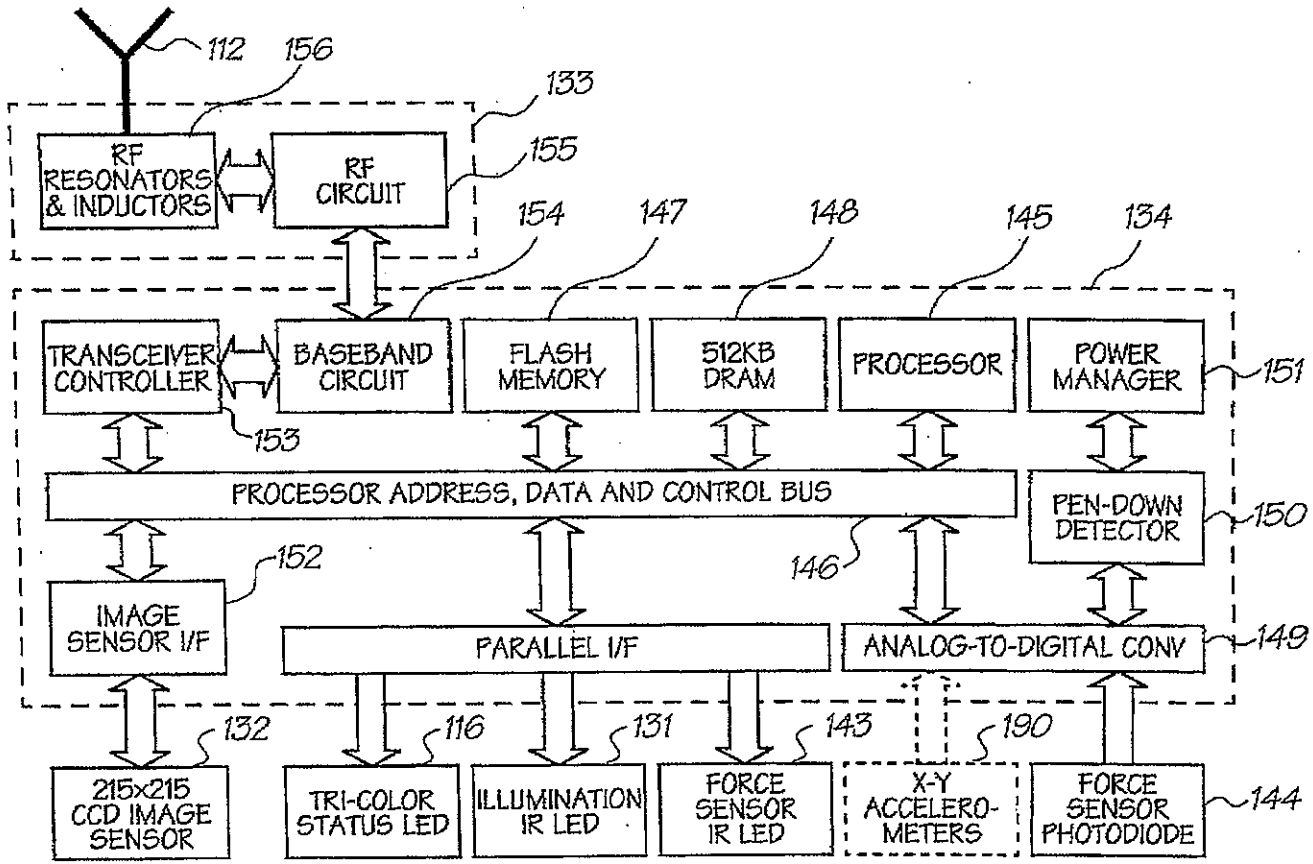
112
156
133
RF RESONATORS & INDUCTORS
RF CIRCUIT
155
154
147
148
145
134
TRANSCEIVER CONTROLLER
BASEBAND CIRCUIT
FLASH MEMORY
512KB DRAM
PROCESSOR
POWER MANAGER
151
153
PROCESSOR ADDRESS, DATA AND CONTROL BUS
PEN-DOWN DETECTOR
150
152
146
IMAGE SENSOR I/F
PARALLEL I/F
ANALOG-TO-DIGITAL CONV
149
132
116
131
143
190
215x215 CCD IMAGE SENSOR
TRI-COLOR STATUS LED
ILLUMINATION IR LED
FORCE SENSOR IR LED
X-Y ACCELERO-METERS
FORCE SENSOR PHOTODIODE
144

FIG. 8

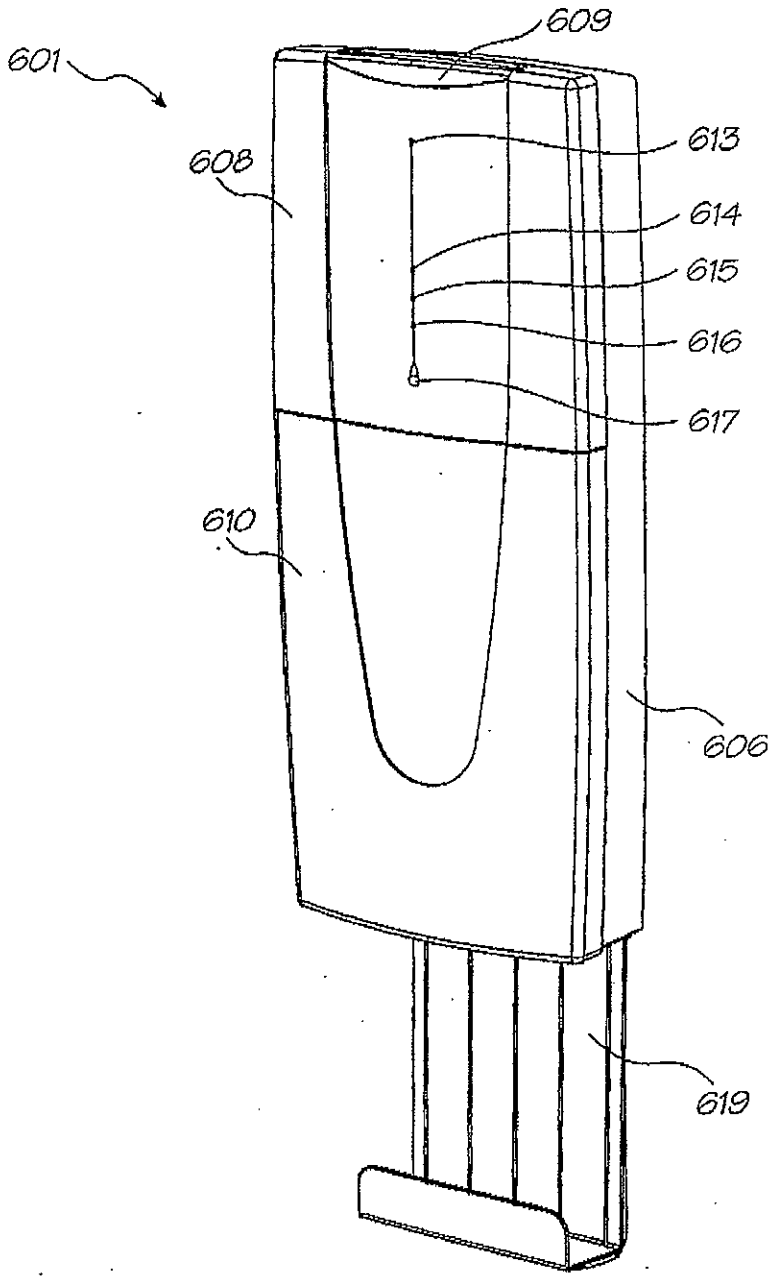

FIG. 9

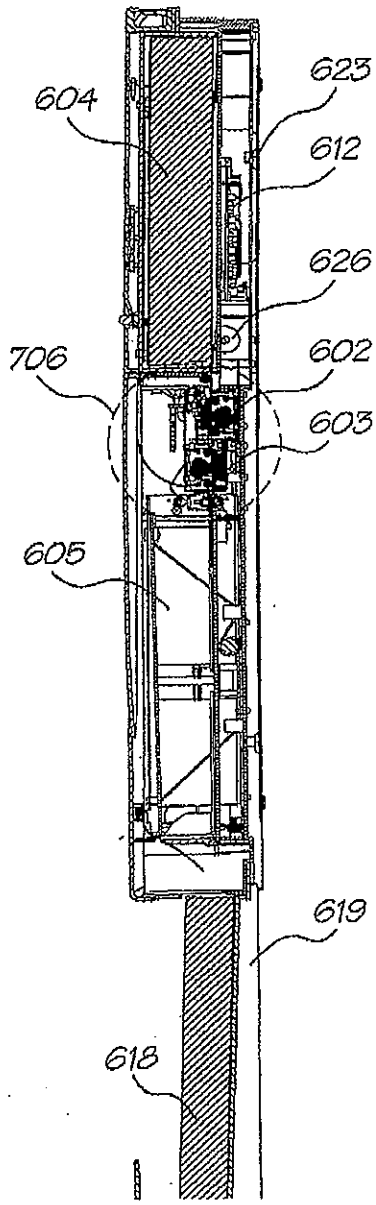
623
604
612
626
706
602
603
605
619
618

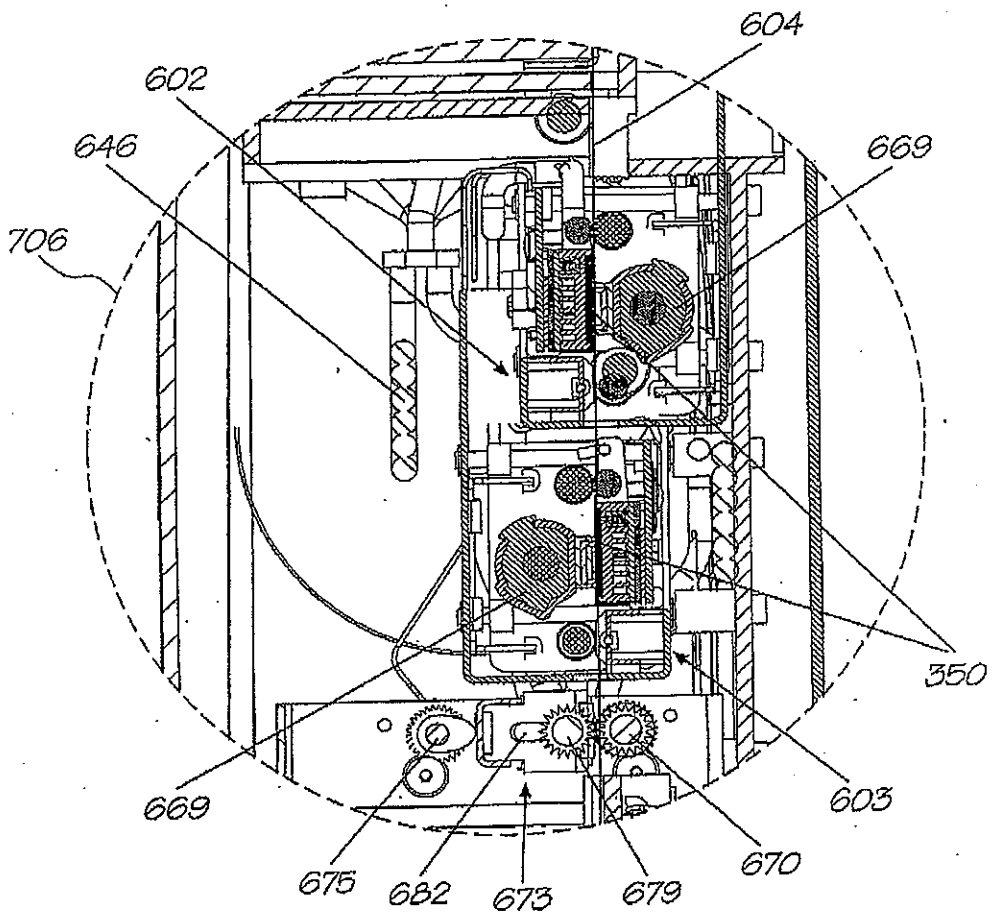

FIG. 10A

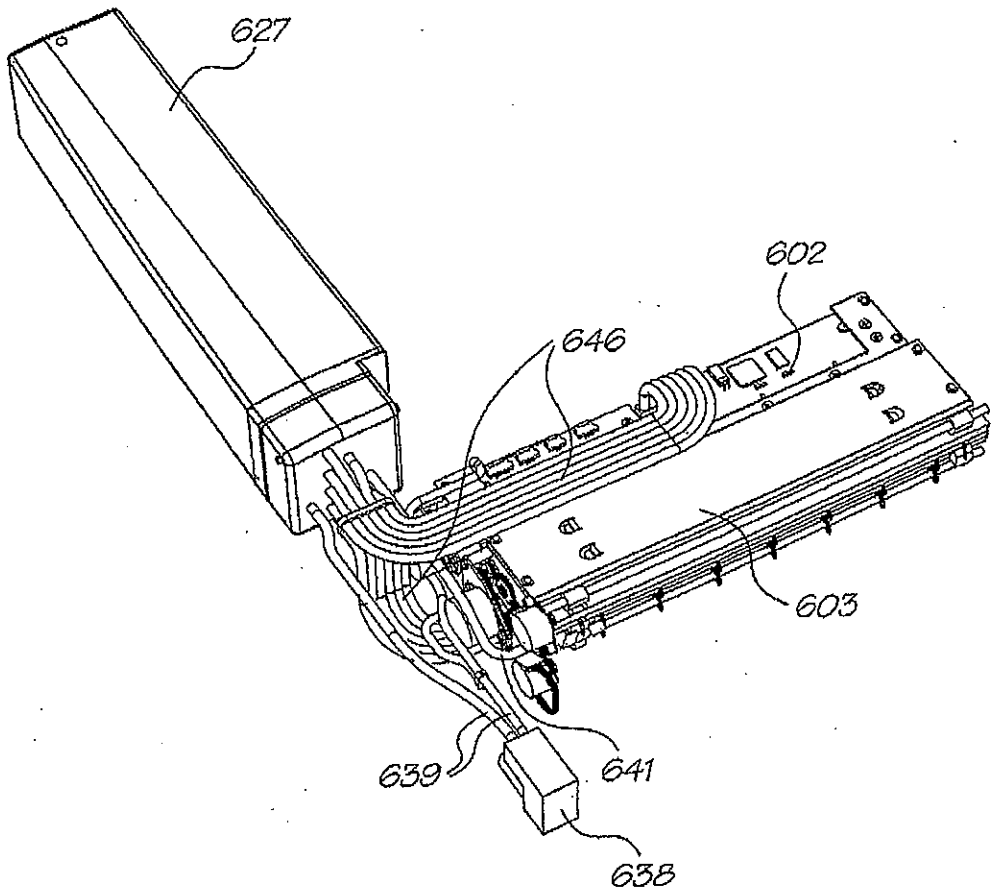

FIG. 11

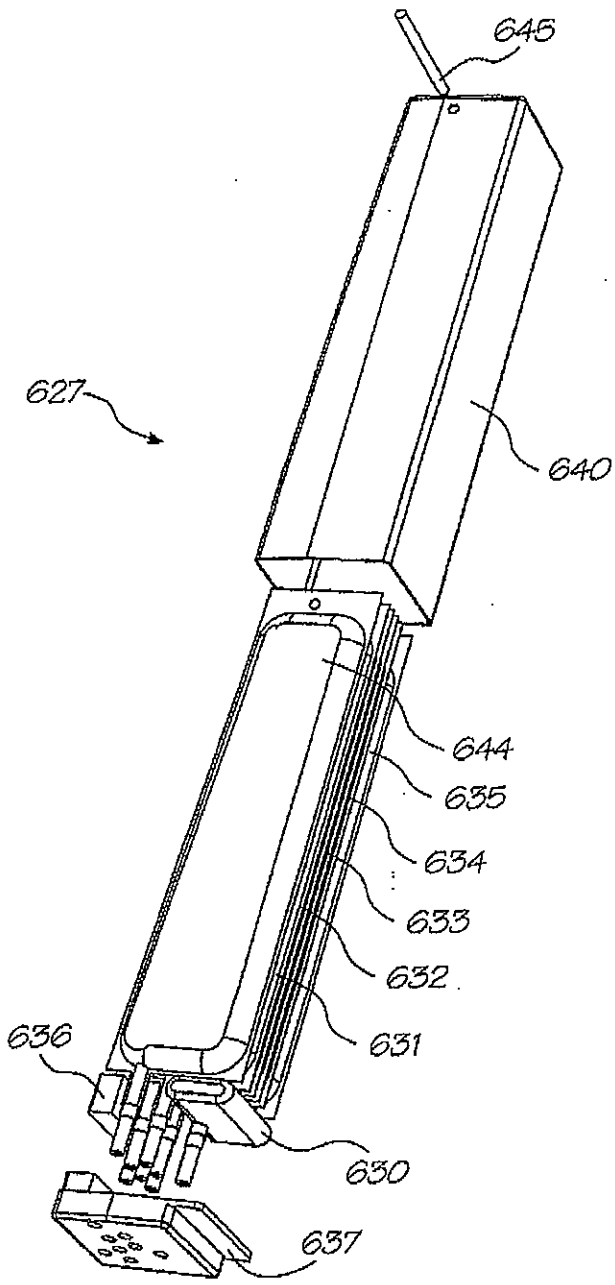

FIG. 12

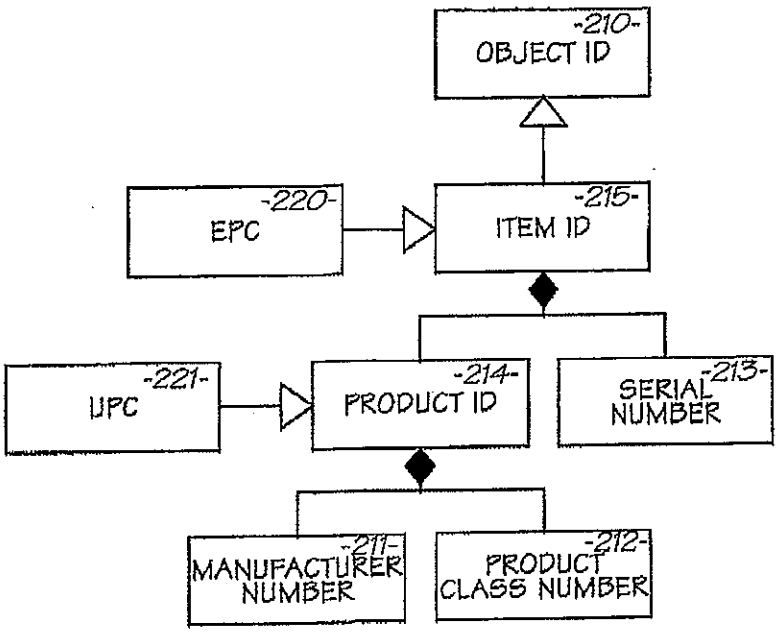
OBJECT ID
-210-
EPC
-220-
ITEM ID
-215-
UPC
-221-
PRODUCT ID
-214-
SERIAL NUMBER
-213-
MANUFACTURER NUMBER
-211-
PRODUCT CLASS NUMBER
-212-

FIG. 13

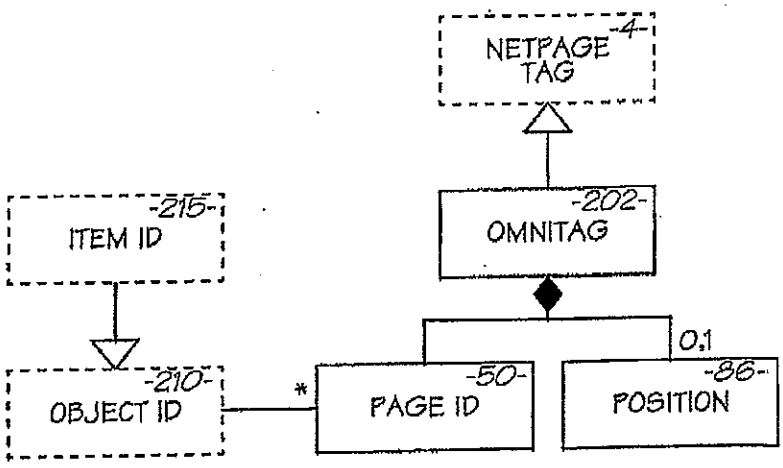
NETPAGE TAG
-4-
ITEM ID
-215-
OMNITAG
-202-
OBJECT ID
-210-
*
PAGE ID
-50-
0,1
POSITION
-86-

FIG. 14

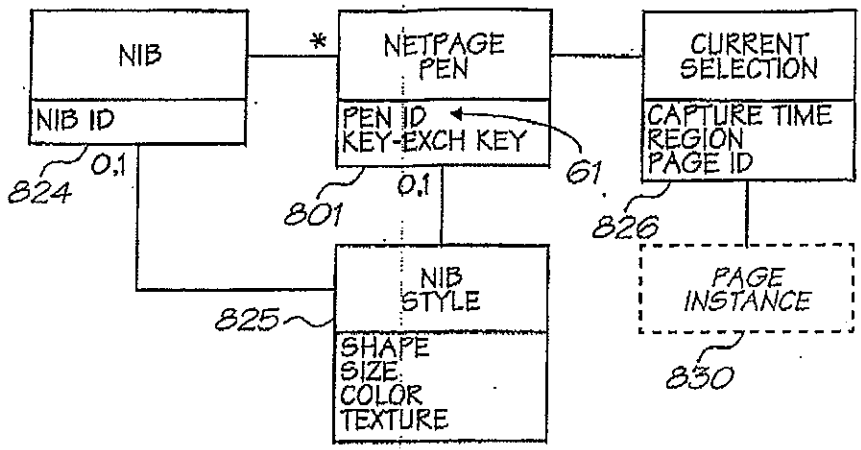
NIB
NIB ID
0,1
824
*
NETPAGE PEN
PEN ID
KEY-EXCH KEY
801
0,1
61
CURRENT SELECTION
CAPTURE TIME
REGION
PAGE ID
826
NIB STYLE
825
SHAPE
SIZE
COLOR
TEXTURE
PAGE INSTANCE
830

FIG. 15

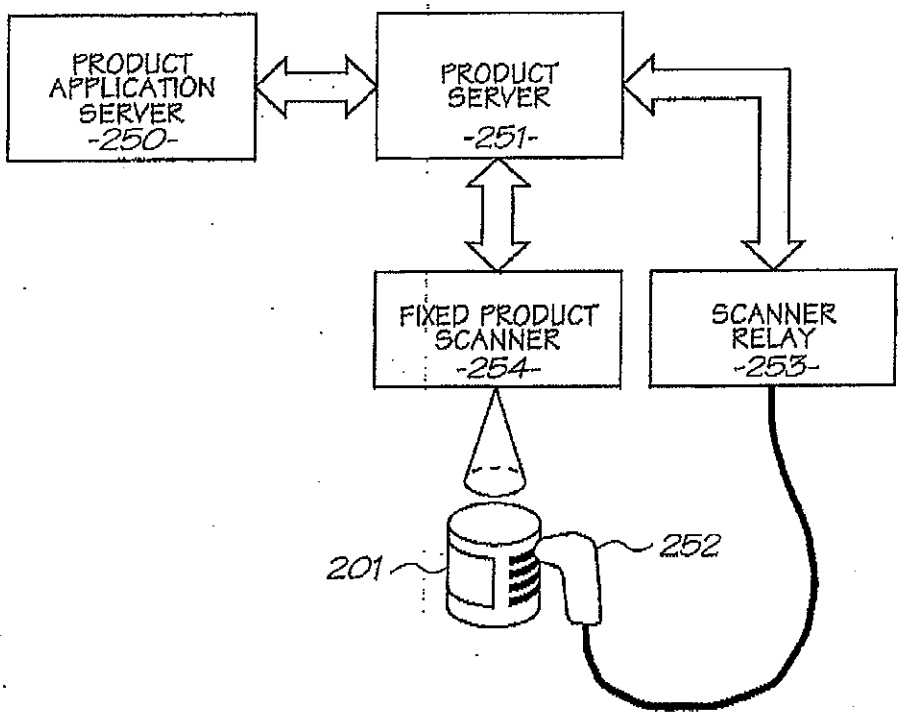
PRODUCT APPLICATION SERVER -250-
PRODUCT SERVER -251-
FIXED PRODUCT SCANNER -254-
SCANNER RELAY -253-
201
252

FIG. 16

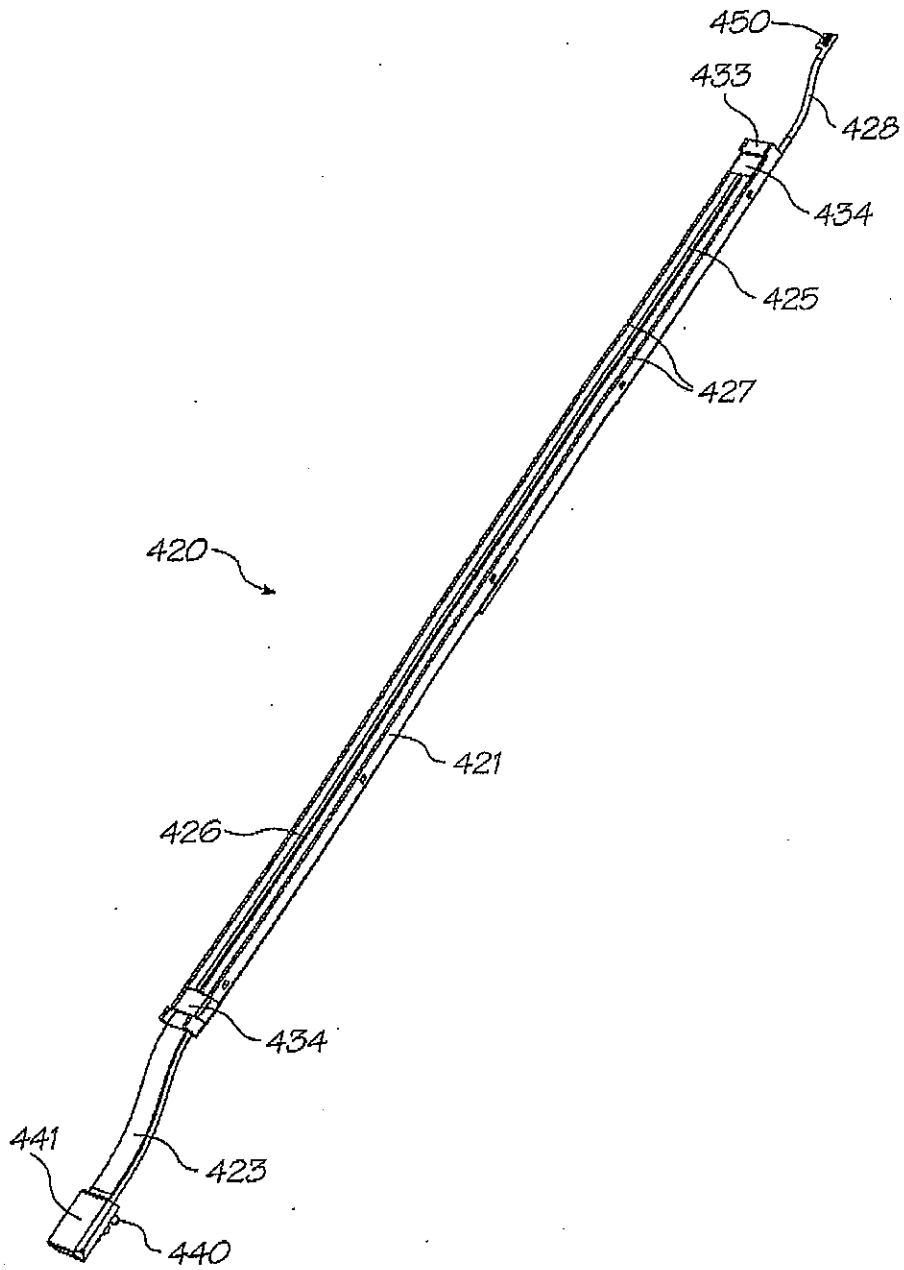

FIG. 17

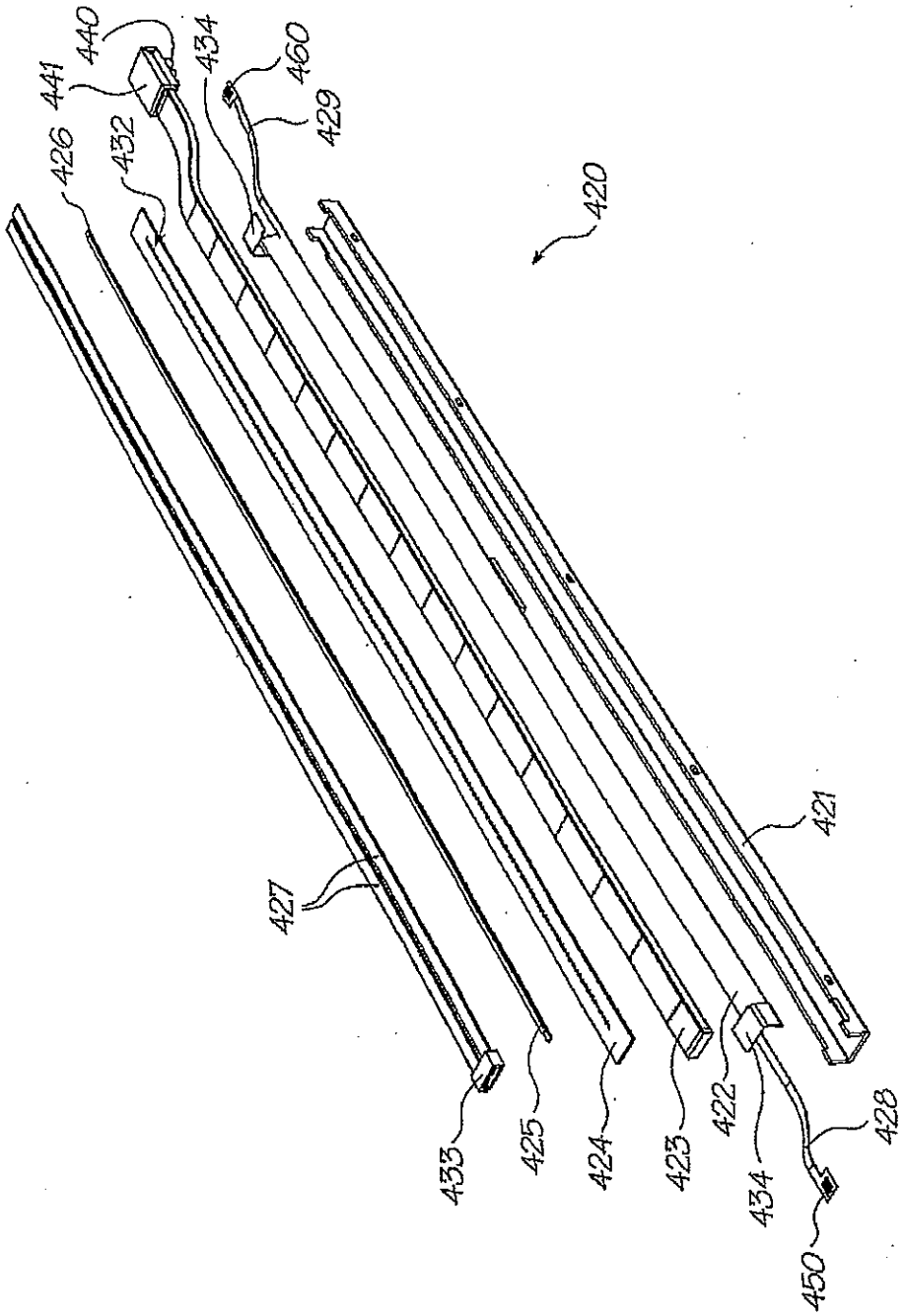
440
441
434
460
426
432
429
420
427
421
433
425
424
423
422
434
428
450

FIG. 18

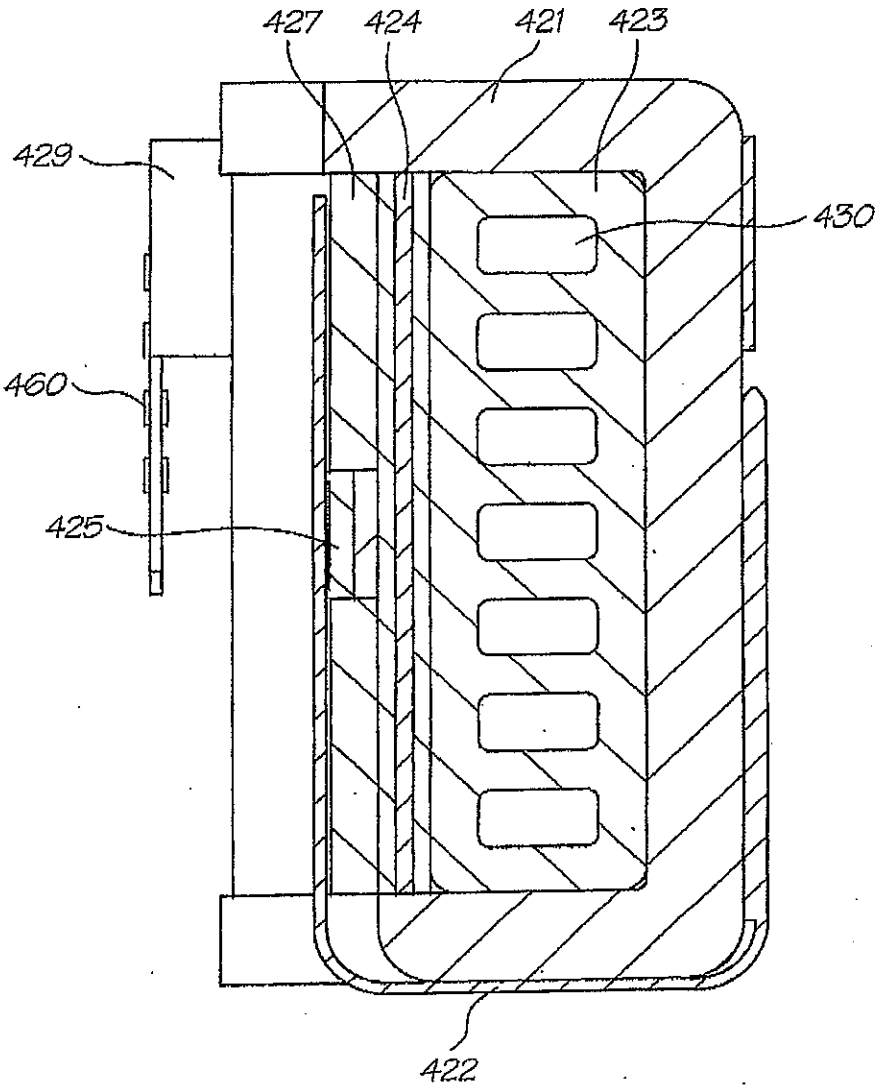

FIG. 19

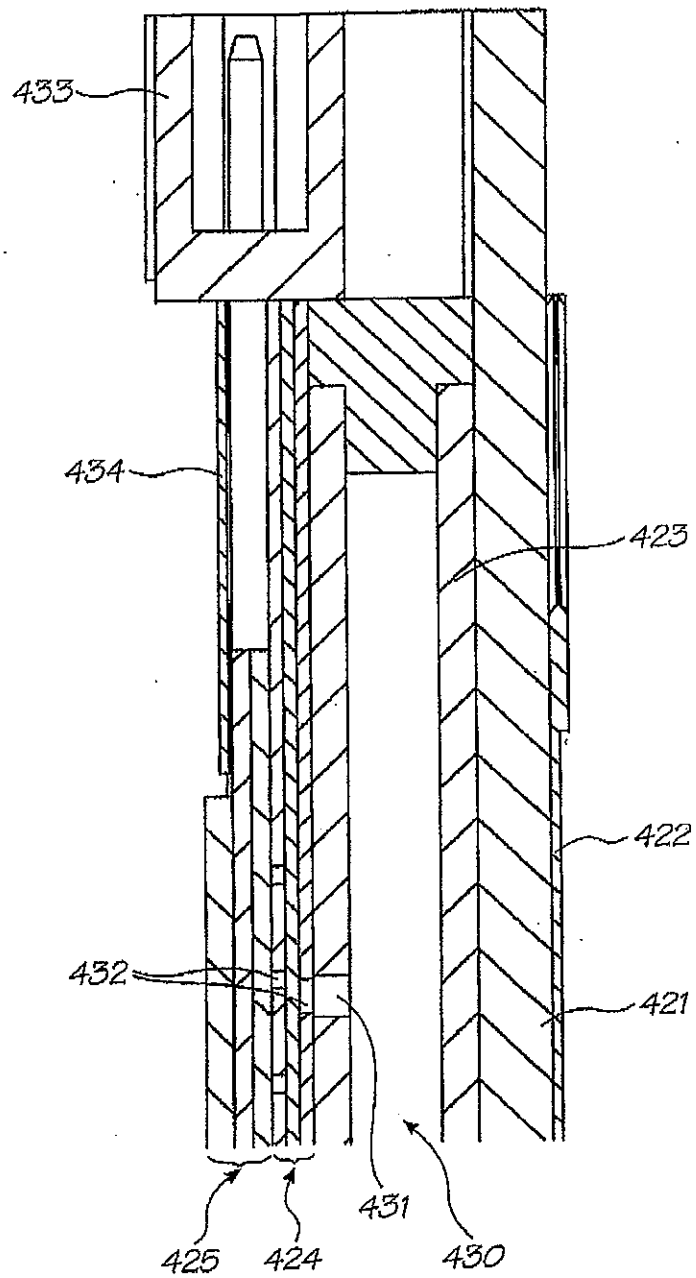

FIG. 20

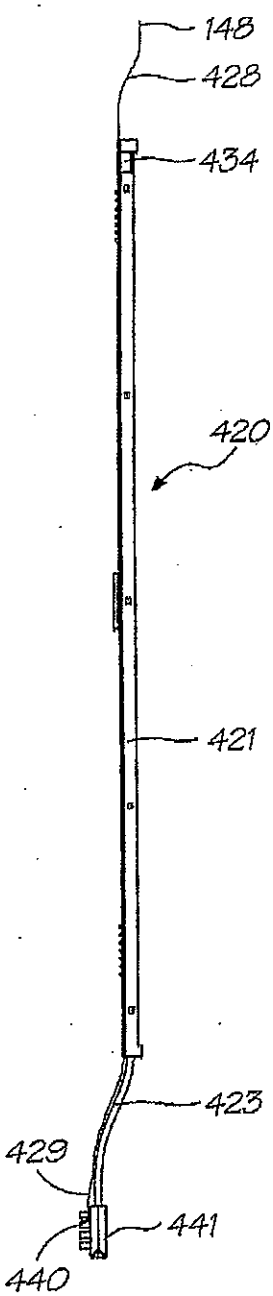

FIG. 21(A)

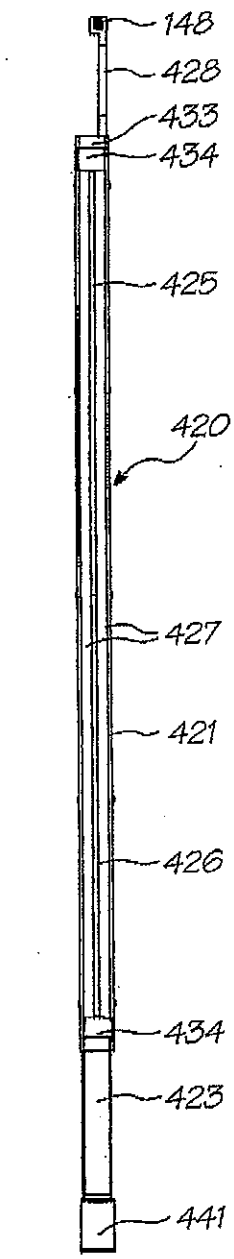

FIG. 21(B)

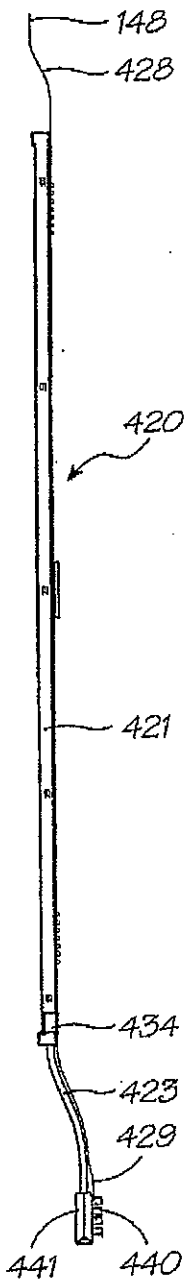

FIG. 21(C)

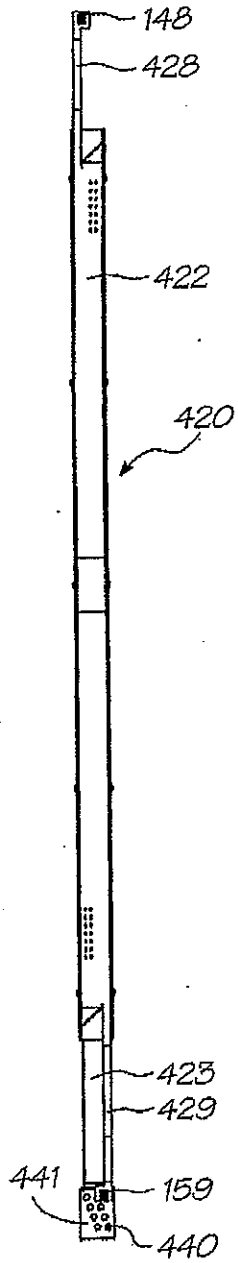

FIG. 21(D)

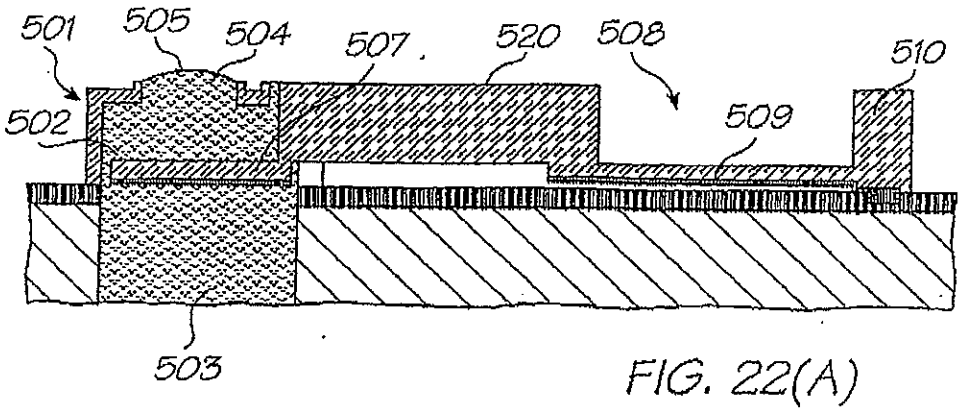

FIG. 22(A)

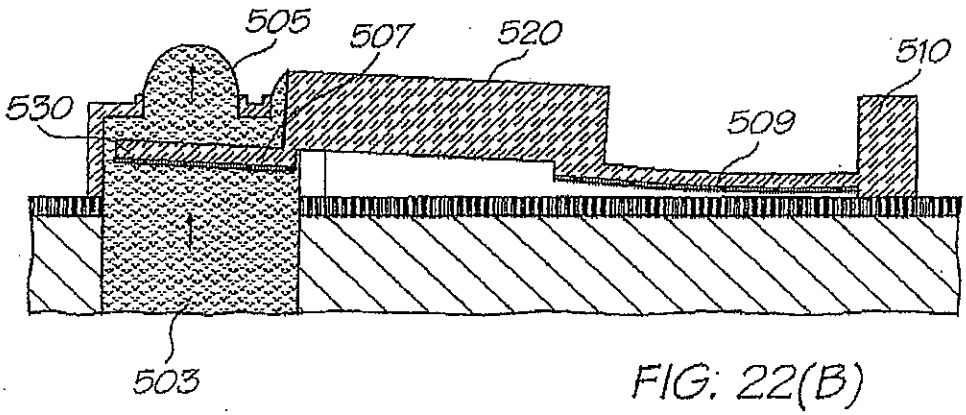

FIG. 22(B)

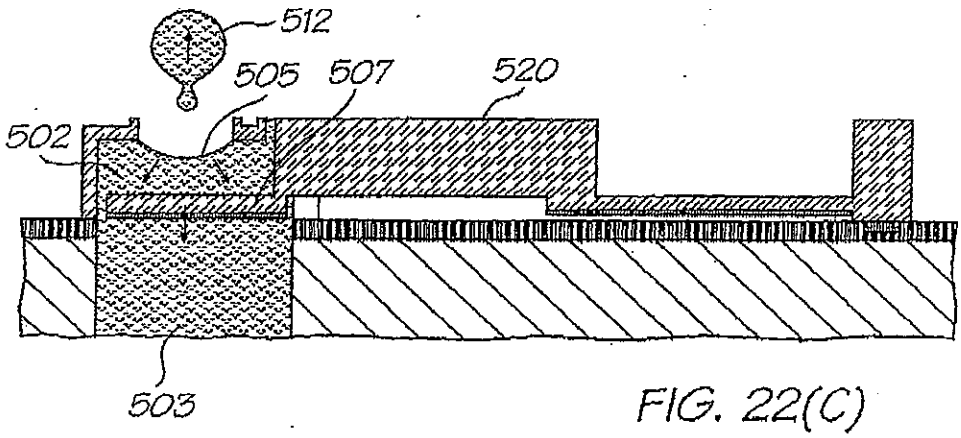

FIG. 22(C)

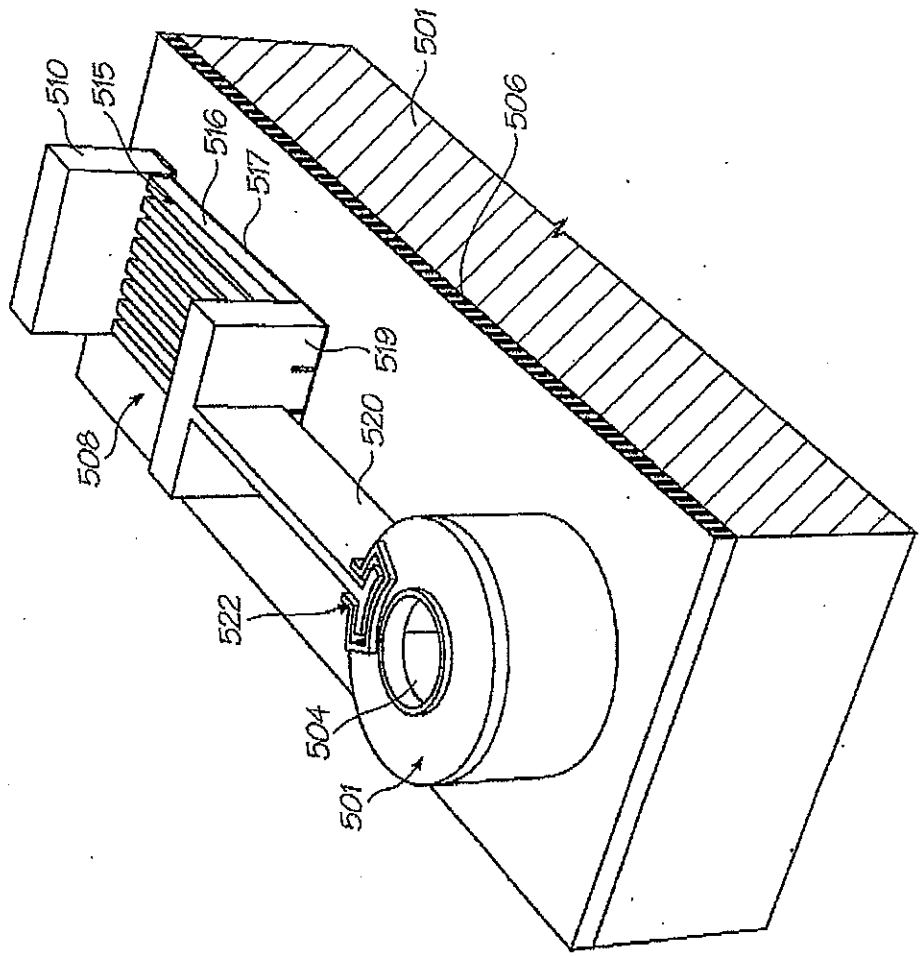

FIG. 23

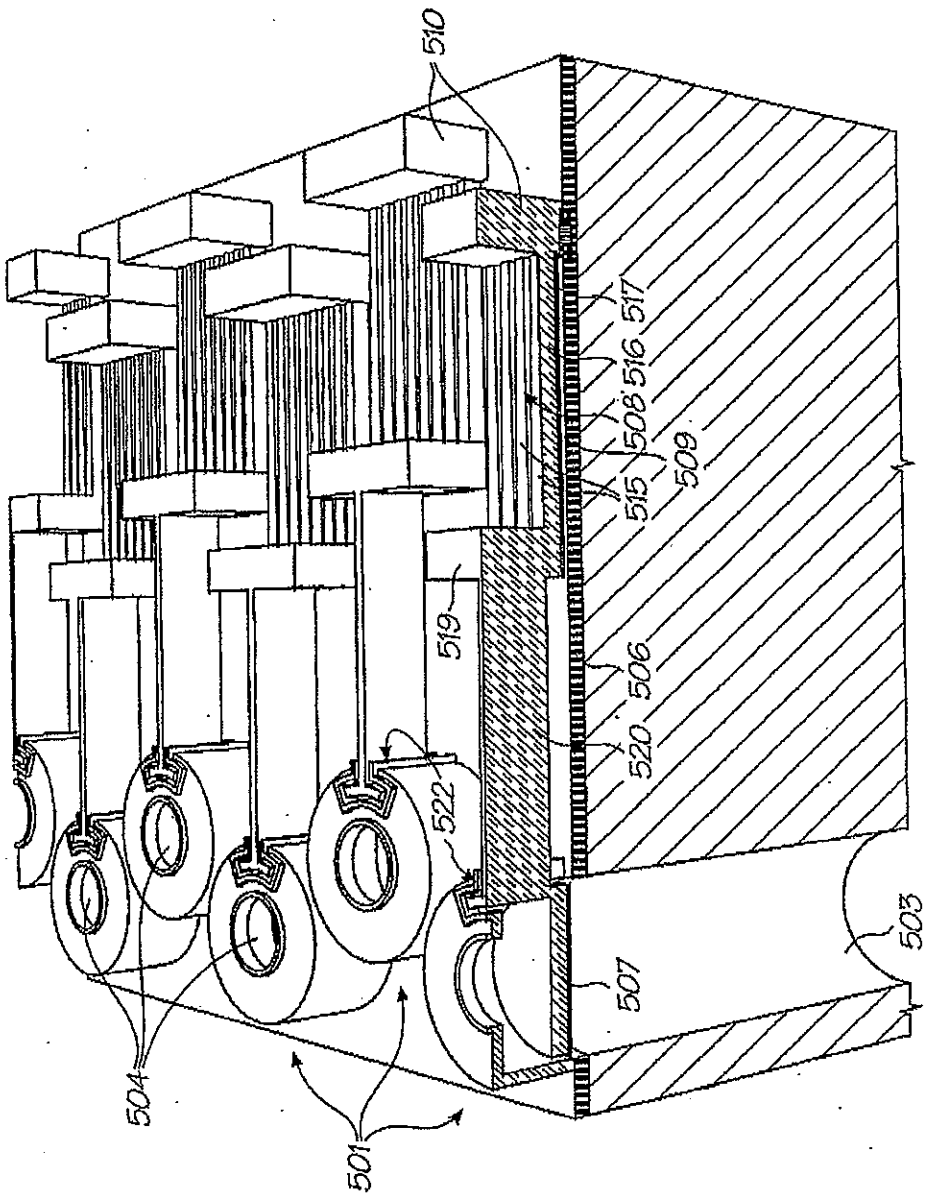

FIG. 24

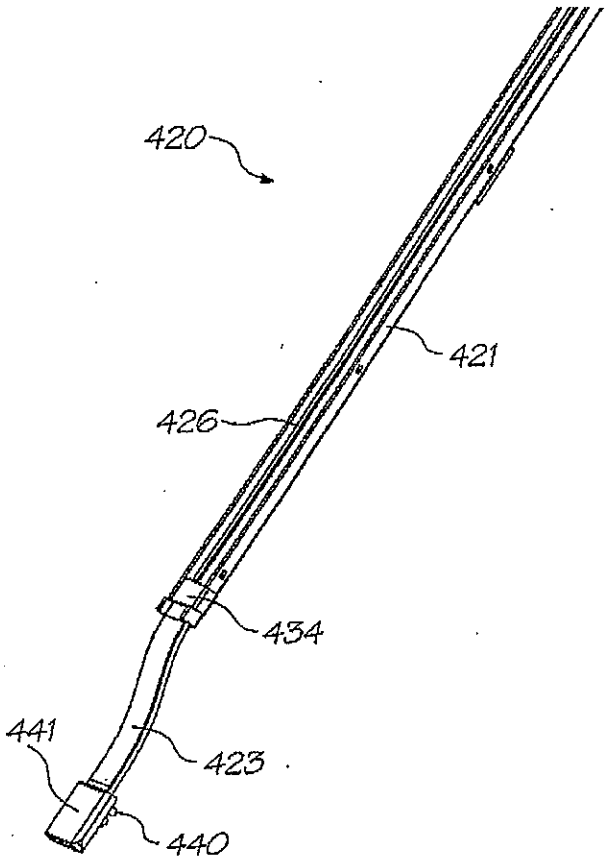

FIG. 25

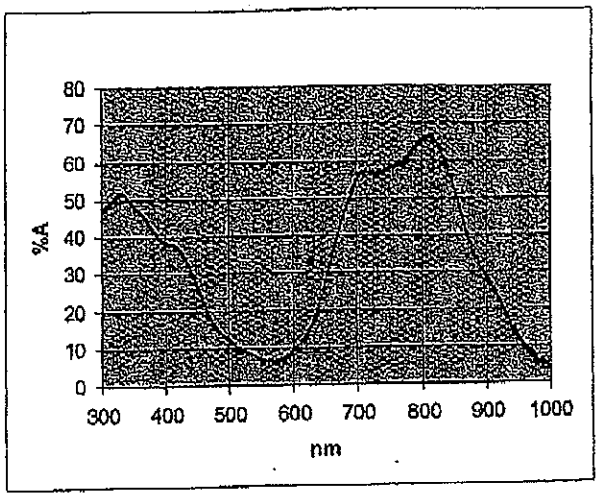
80
70
60
50
40
30
20
10
0
%A
300
400
500
600
700
800
900
1000
nm

FIG. 26

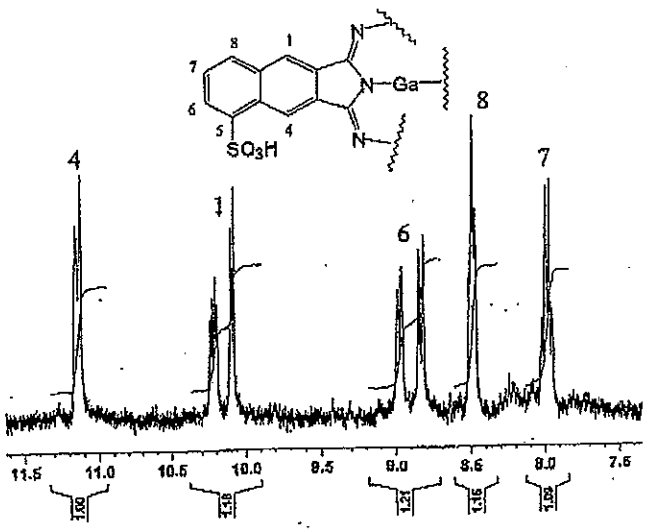
8
1
7
6
5
4
N
N
Ga
N
SO3H
4
1
6
8
7
11.5
11.0
10.5
10.0
9.5
9.0
8.5
8.0
7.5

FIG. 27

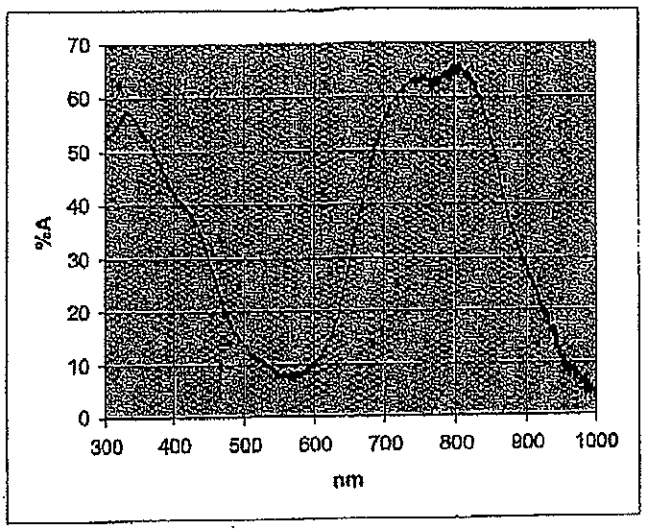
70
60
50
40
30
20
10
0
%A
300
400
500
600
700
800
900
1000
nm

FIG. 28

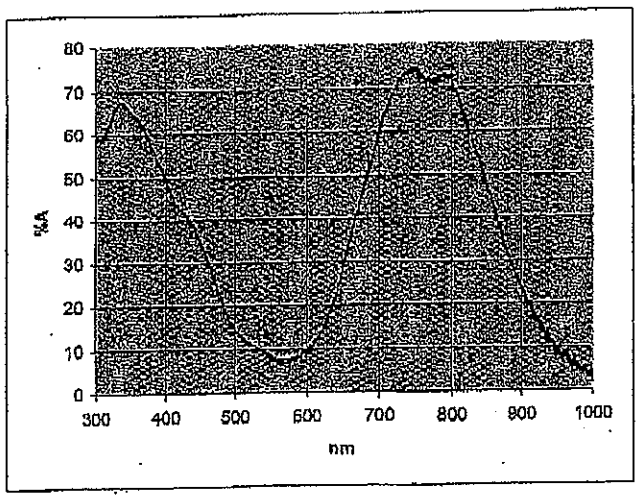
80
70
60
50
40
30
20
10
0
%A
300
400
500
600
700
800
900
1000
nm

FIG. 29

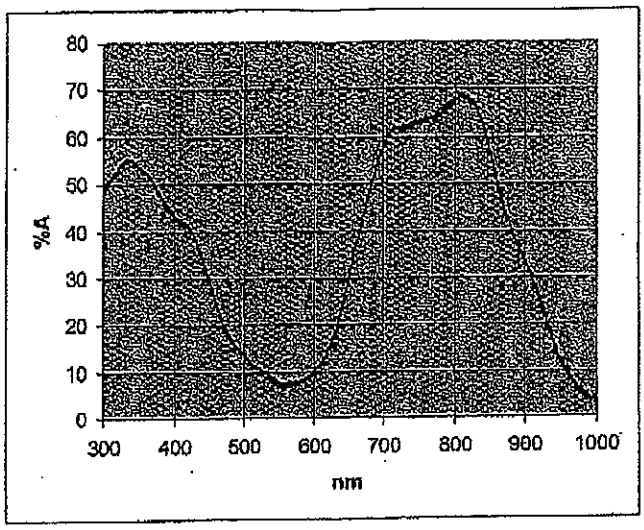
80
70
60
50
40
30
20
10
0
%A
300
400
500
600
700
800
900
1000
nm

FIG. 30

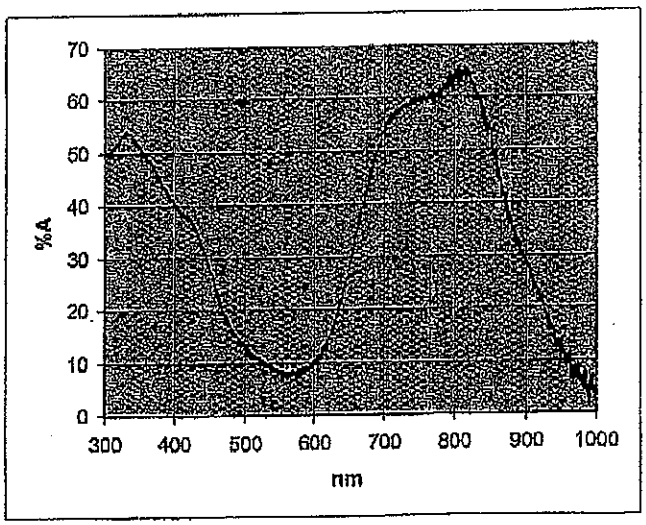
70
60
50
40
30
20
10
0
%A
300
400
500
600
700
800
900
1000
nm

FIG. 31