(12) INTERNATIONAL APPLICATION PUBLISHED UNDER THE PATENT COOPERATION TREATY (PCT)

(19) World Intellectual Property Organization
International Bureau

(43) International Publication Date
26 May 2006 (26.05.2006)

PCT

(10) International Publication Number
WO 2006/053759 A1

(51) International Patent Classification:
A23G 3/10 (2006.01)

(21) International Application Number:
PCT/EP2005/012358

(22) International Filing Date:
16 November 2005 (16.11.2005)

(25) Filing Language: English

(26) Publication Language: English

(30) Priority Data:
0425357.1 18 November 2004 (18.11.2004) GB

(71) Applicant and
(72) Inventor: **HAWTHORNE, Robert, John, Cecil** [GB/GB]; 18 Point Street, Larne, Country Antrim, BT40 1HY (GB).

(74) Agents: **WALLACE, Alan** et al.; F.R. Kelly & Co., 4 Mount Charles, Belfast BT7 1NZ, Northern Ireland (GB).

(81) Designated States *(unless otherwise indicated, for every kind of national protection available)*: AE, AG, AL, AM, AT, AU, AZ, BA, BB, BG, BR, BW, BY, BZ, CA, CH, CN, CO, CR, CU, CZ, DE, DK, DM, DZ, EC, EE, EG, ES, FI, GB, GD, GE, GH, GM, HR, HU, ID, IL, IN, IS, JP, KE, KG, KM, KN, KP, KR, KZ, LC, LK, LR, LS, LT, LU, LV, LY, MA, MD, MG, MK, MN, MW, MX, MZ, NA, NG, NI, NO, NZ, OM, PG, PH, PL, PT, RO, RU, SC, SD, SE, SG, SK, SL, SM, SY, TJ, TM, TN, TR, TT, TZ, UA, UG, US, UZ, VC, VN, YU, ZA, ZM, ZW.

(84) Designated States *(unless otherwise indicated, for every kind of regional protection available)*: ARIPO (BW, GH, GM, KE, LS, MW, MZ, NA, SD, SL, SZ, TZ, UG, ZM, ZW), Eurasian (AM, AZ, BY, KG, KZ, MD, RU, TJ, TM), European (AT, BE, BG, CH, CY, CZ, DE, DK, EE, ES, FI, FR, GB, GR, HU, IE, IS, IT, LT, LU, LV, MC, NL, PL, PT, RO, SE, SI, SK, TR), OAPI (BF, BJ, CF, CG, CI, CM, GA, GN, GQ, GW, ML, MR, NE, SN, TD, TG).

Published:
— *with international search report*

For two-letter codes and other abbreviations, refer to the "Guidance Notes on Codes and Abbreviations" appearing at the beginning of each regular issue of the PCT Gazette.

(54) **Title:** AN APPARATUS FOR MAKING CANDY FLOSS

(57) **Abstract:** An apparatus for making candy floss comprising a rotatable bowl; a rotatable heating element located within the bowl; means for depositing a quantity of sugar into the bowl; and an actuating mechanism including means for gripping a stick. The actuating mechanism actuates a gripped stick in a first direction between an extended position, in which the stick is at least partially located within the bowl, and a retracted position in which the stick is withdrawn from the bowl. The actuating mechanism and/or the gripping means rotate the gripped stick about its longitudinal axis.

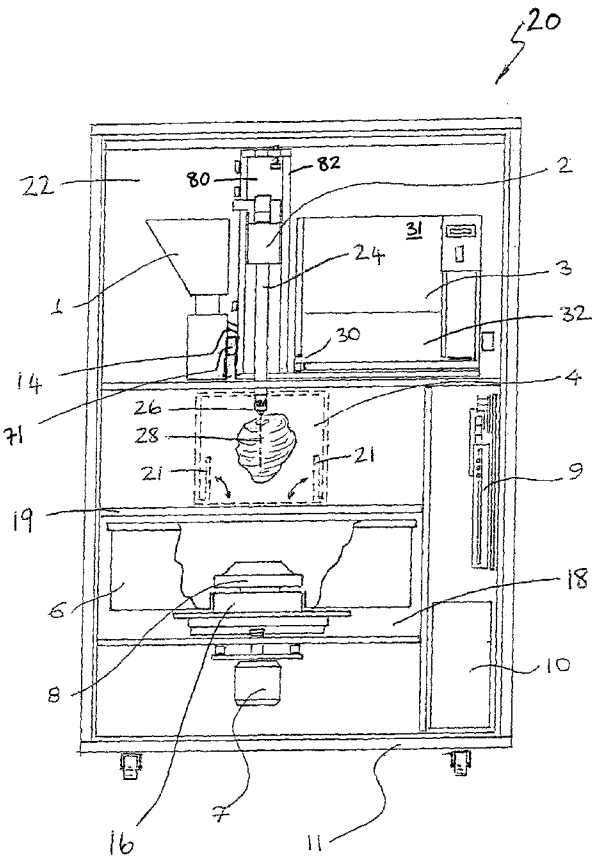

WO 2006/053759 A1