(12) INTERNATIONAL APPLICATION PUBLISHED UNDER THE PATENT COOPERATION TREATY (PCT)

(19) World Intellectual Property Organization
International Bureau

(43) International Publication Date
7 February 2008 (07.02.2008)

PCT

(10) International Publication Number
WO 2008/016569 A3

(51) International Patent Classification:
*G01N 7/14* (2006.01)

(21) International Application Number:
PCT/US2007/017038

(22) International Filing Date: 30 July 2007 (30.07.2007)

(25) Filing Language: English

(26) Publication Language: English

(30) Priority Data:
60/820,958 31 July 2006 (31.07.2006) US

(71) Applicant *(for all designated States except US)*: **APPLIED MATERIALS, INC.** [US/US]; 3050 Bowers Avenue, Santa Clara, CA 95054 (US).

(72) Inventors; and
(75) Inventors/Applicants *(for US only)*: **CARLSON, David, K.** [US/US]; 4054 Claitor Way, San Jose, CA 95132 (US).

**KUPPURAO, Satheesh** [US/US]; 4578 Piper Drive, San Jose, CA 95129 (US).

(74) Agents: **DUGAN, Brian, M.** et al.; Dugan & Dugan, PC, Suite 309, 245 Saw Mill River Road, Hawthorne, NY 10532 (US).

(81) Designated States *(unless otherwise indicated, for every kind of national protection available)*: AE, AG, AL, AM, AT, AU, AZ, BA, BB, BG, BH, BR, BW, BY, BZ, CA, CH, CN, CO, CR, CU, CZ, DE, DK, DM, DO, DZ, EC, EE, EG, ES, FI, GB, GD, GE, GH, GM, GT, HN, HR, HU, ID, IL, IN, IS, JP, KE, KG, KM, KN, KP, KR, KZ, LA, LC, LK, LR, LS, LT, LU, LY, MA, MD, ME, MG, MK, MN, MW, MX, MY, MZ, NA, NG, NI, NO, NZ, OM, PG, PH, PL, PT, RO, RS, RU, SC, SD, SE, SG, SK, SL, SM, SV, SY, TJ, TM, TN, TR, TT, TZ, UA, UG, US, UZ, VC, VN, ZA, ZM, ZW.

(84) Designated States *(unless otherwise indicated, for every kind of regional protection available)*: ARIPO (BW, GH, GM, KE, LS, MW, MZ, NA, SD, SL, SZ, TZ, UG, ZM,

*[Continued on next page]*

(54) Title: METHODS AND APPARATUS FOR INSITU ANALYSIS OF GASES IN ELECTRONIC DEVICE FABRICATION SYSTEMS

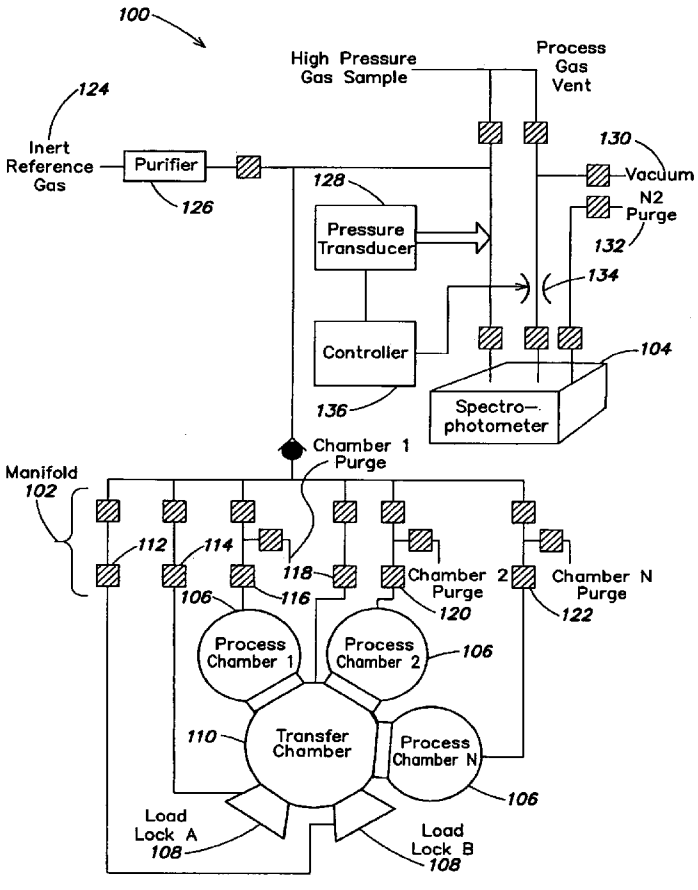


(57) Abstract: Systems and methods are disclosed that include adjusting a pressure level of a sample gas in a testing chamber, for example, using a pressurized inert reference gas, and determining a composition of the adjusted sample gas. By adjusting the pressure level of the sample gas, the composition of the sample gas may be determined more accurately than otherwise possible. Numerous other aspects are disclosed.

WO 2008/016569 A3

ZW), Eurasian (AM, AZ, BY, KG, KZ, MD, RU, TJ, TM), European (AT, BE, BG, CH, CY, CZ, DE, DK, EE, ES, FI, FR, GB, GR, HU, IE, IS, IT, LT, LU, LV, MC, MT, NL, PL, PT, RO, SE, SI, SK, TR), OAPI (BF, BJ, CF, CG, CI, CM, GA, GN, GQ, GW, ML, MR, NE, SN, TD, TG).

**Published:**
— *with international search report*

**(88) Date of publication of the international search report:**
27 March 2008