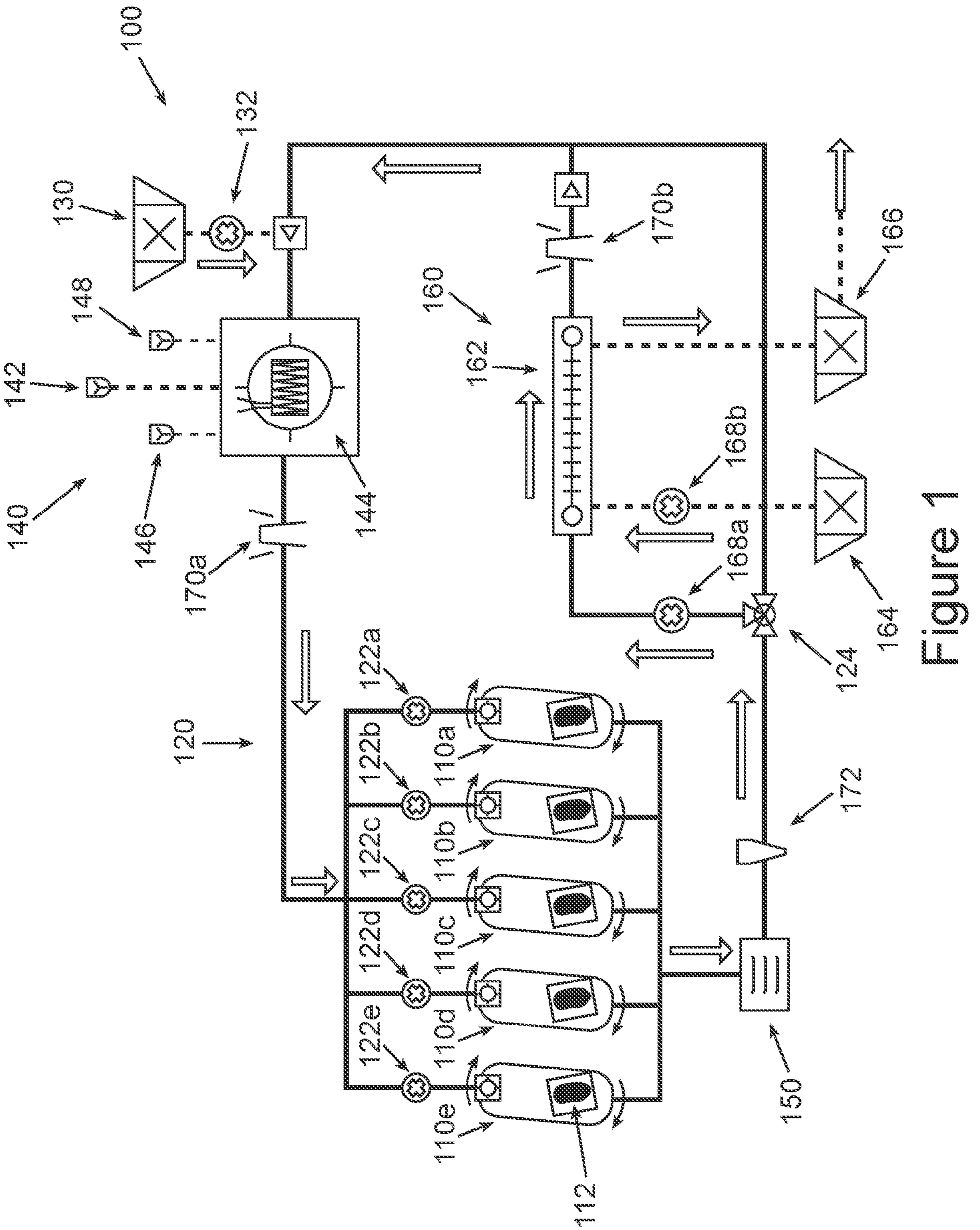
100
132
130
148
142
140
146
144
170a
160
162
170b
166
168b
168a
164
124
172
150
120
122a
122b
122c
122d
122e
110a
110b
110c
110d
110e
112

Figure 1

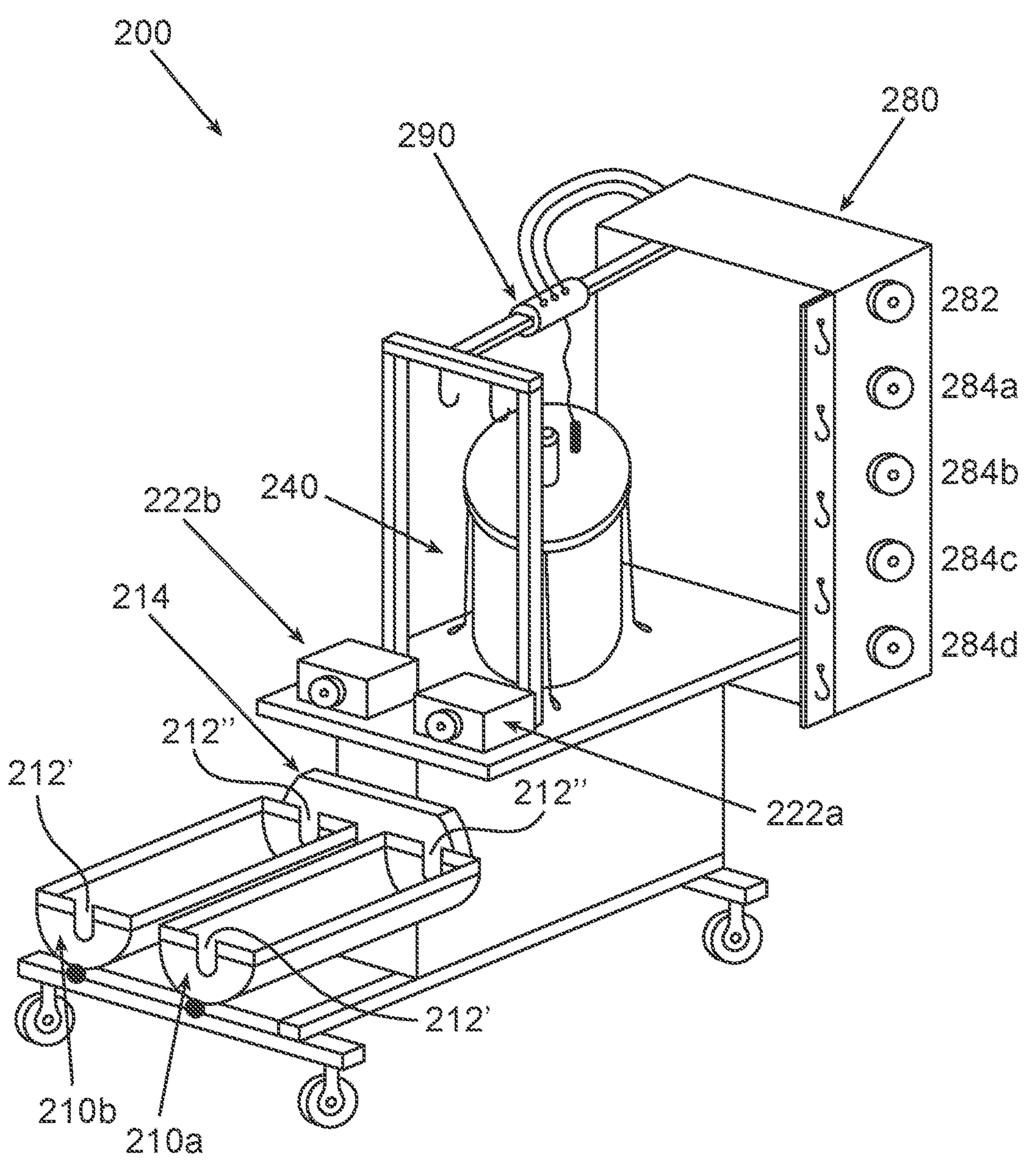
200
280
290
282
284a
284b
284c
284d
240
222b
214
212''
212'
212''
222a
212'
210b
210a

Figure 2

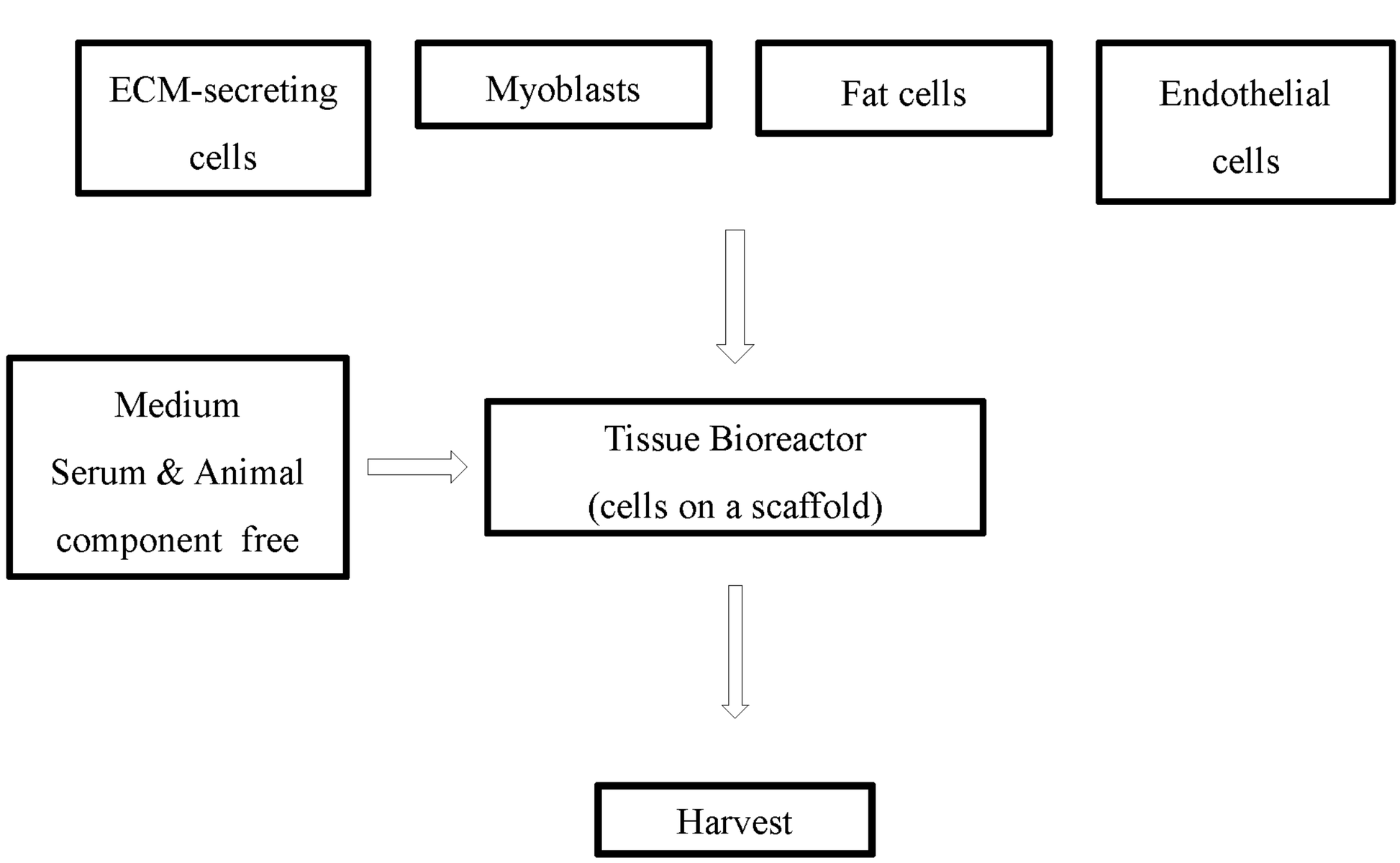
ECM-secreting cells
Myoblasts
Fat cells
Endothelial cells
Medium
Serum & Animal component free
Tissue Bioreactor
(cells on a scaffold)
Harvest

Figure 3

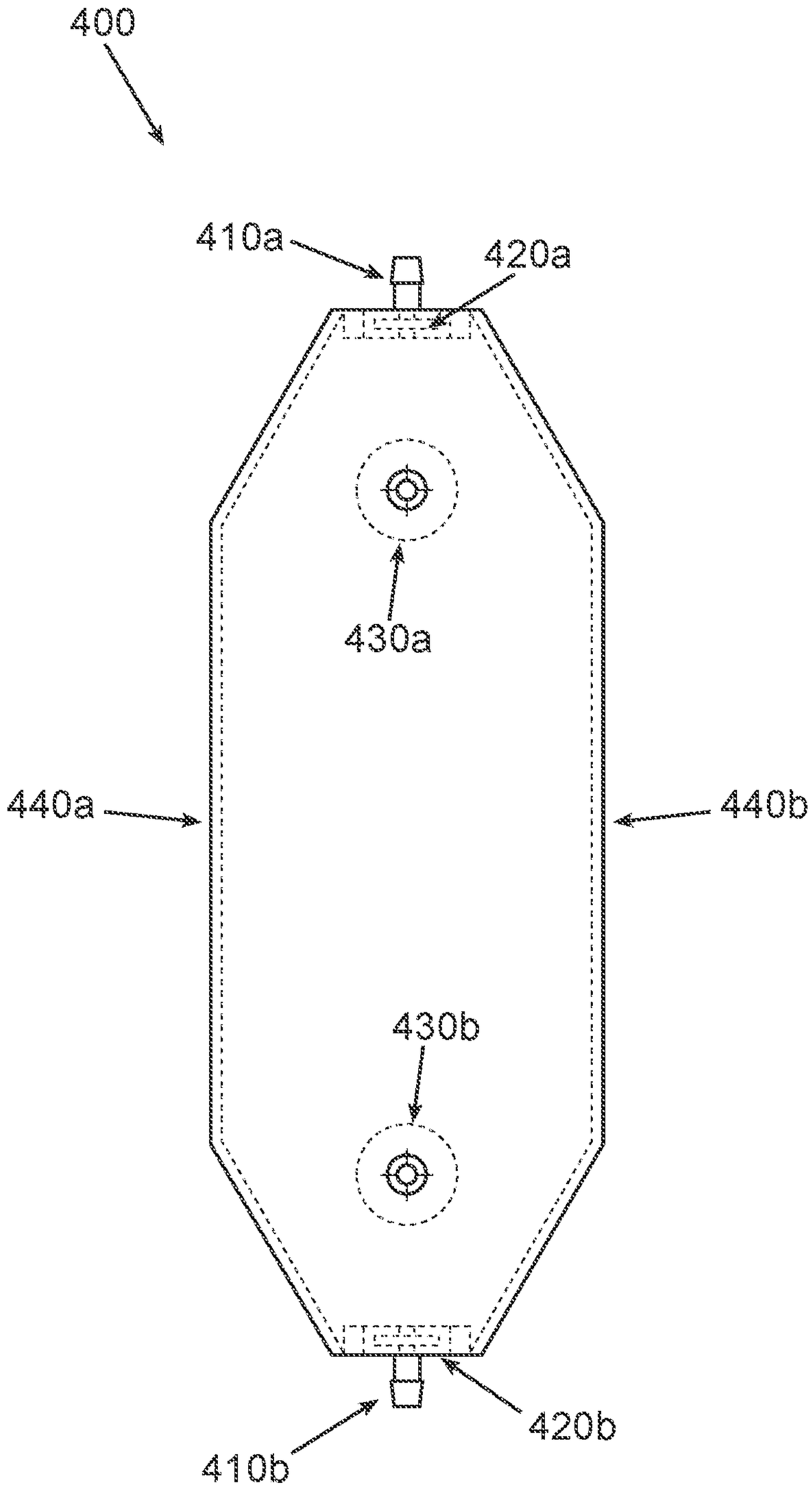


Figure 4

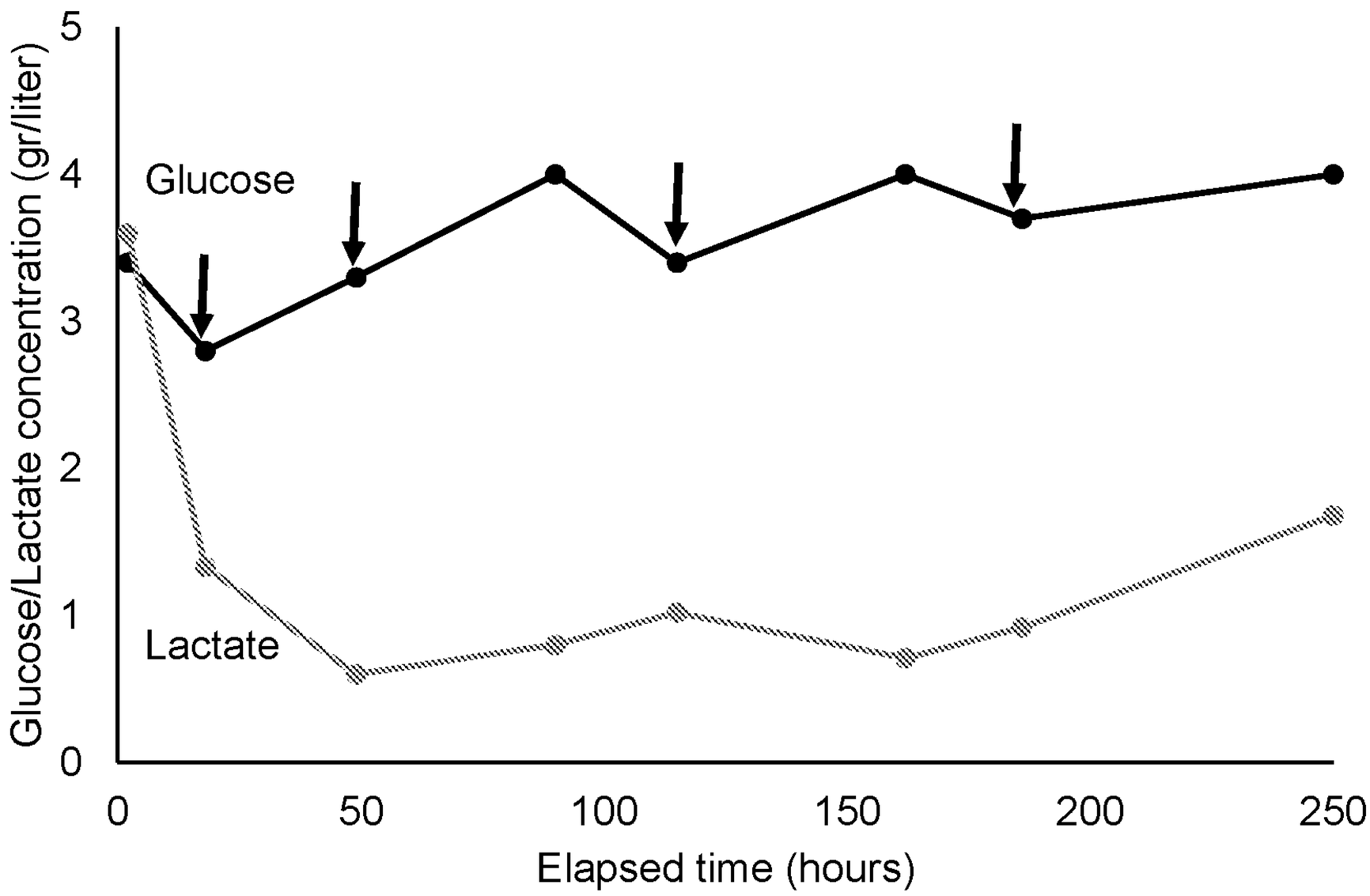
Glucose/Lactate concentration (gr/liter)
5
4
3
2
1
0
Glucose
Lactate
0
50
100
150
200
250
Elapsed time (hours)

Figure 5

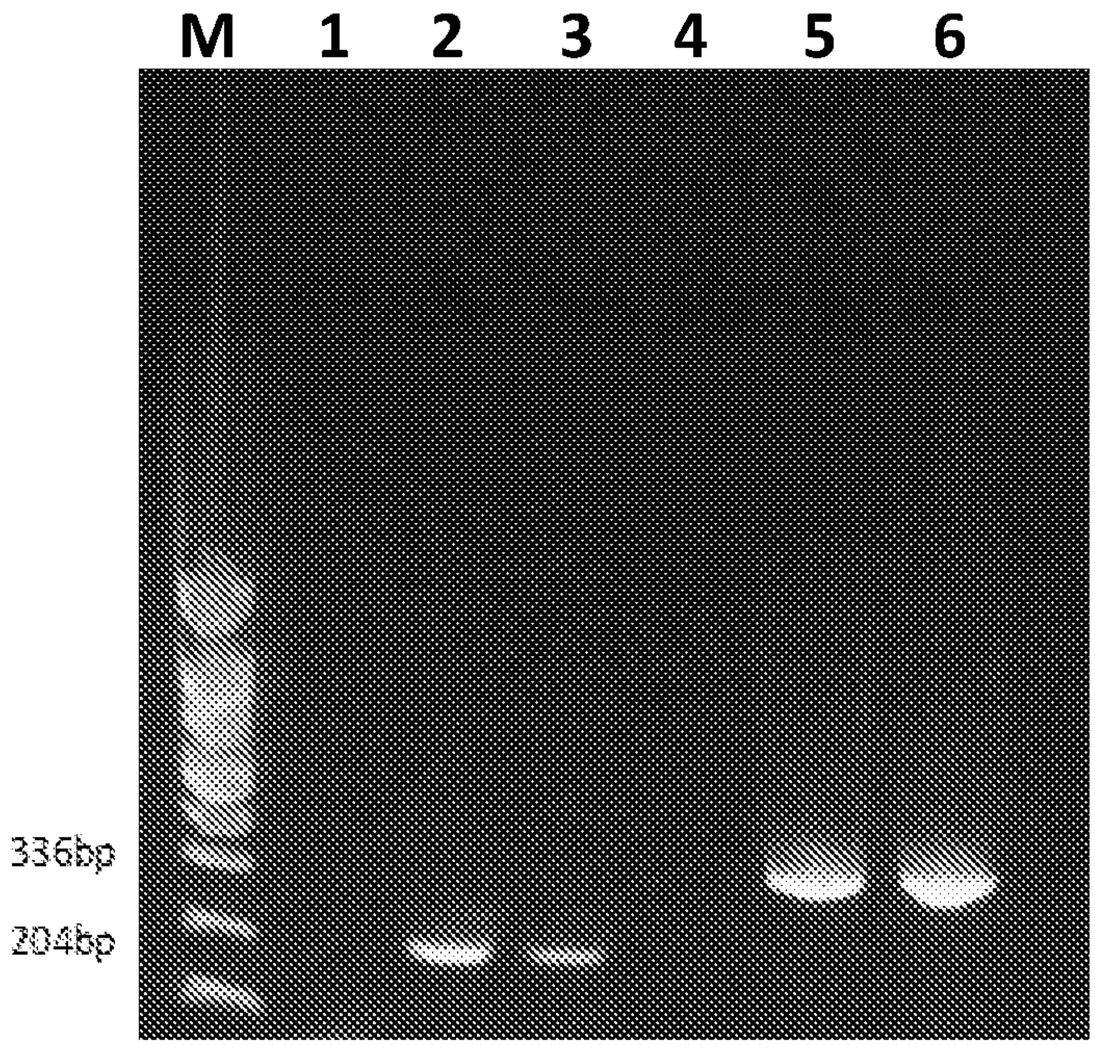


Figure 6