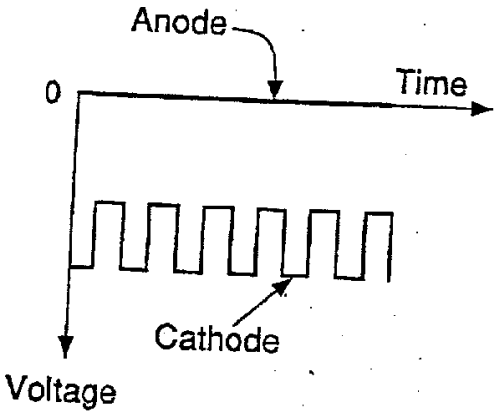

Figure 1a

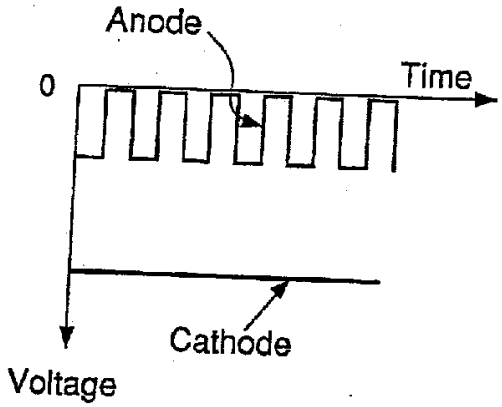

Figure 1b

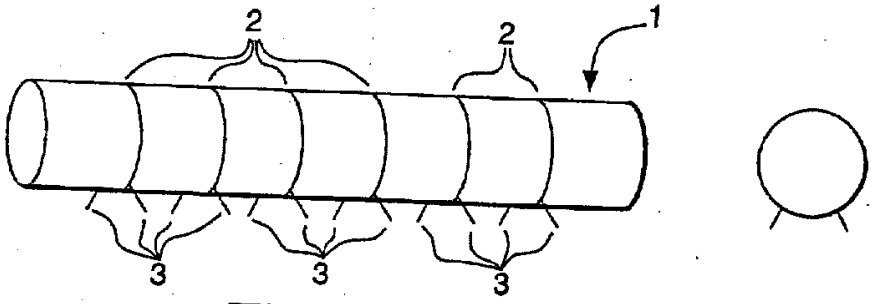

Figure 3

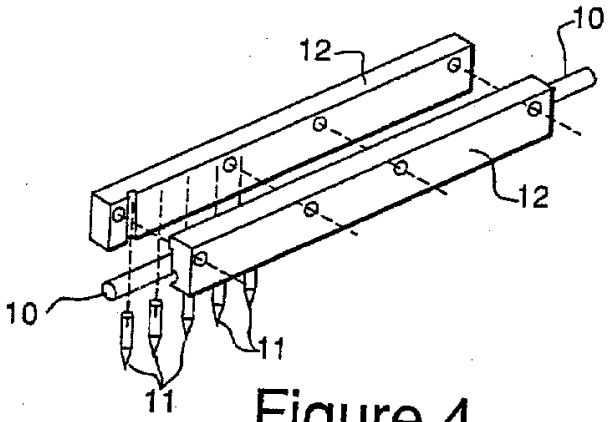

Figure 4



Figure 2a

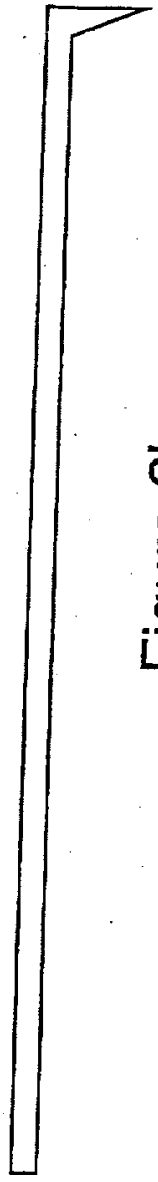

Figure 2b



Figure 2c

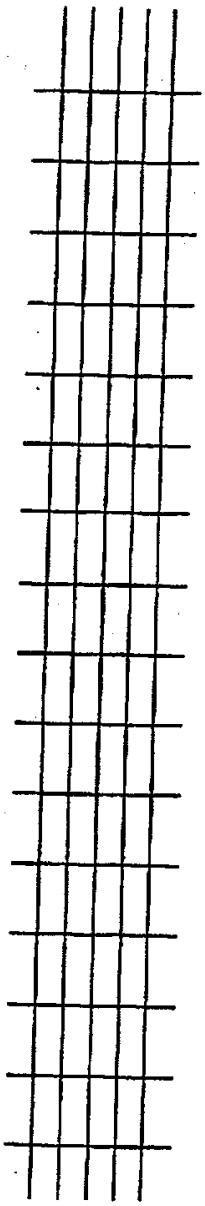

Figure 2d

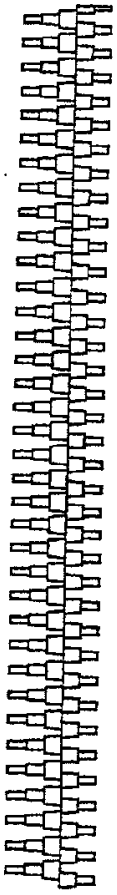

Figure 2e

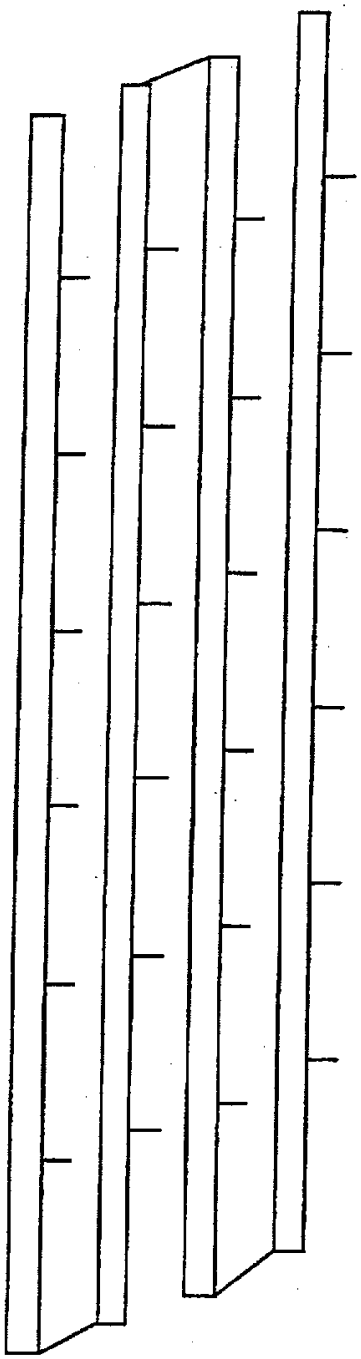

Figure 2f

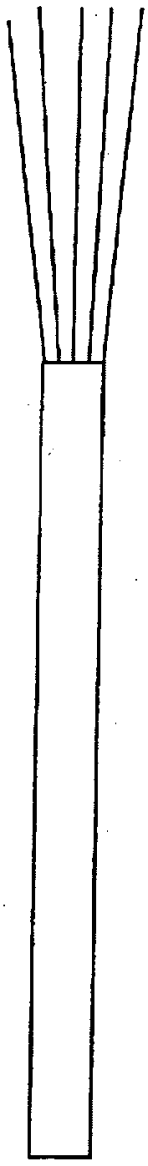

Figure 2g

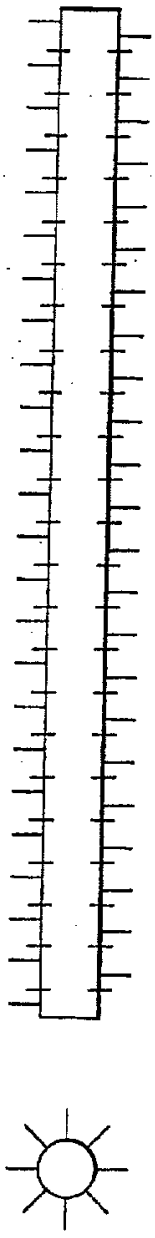

Figure 2h

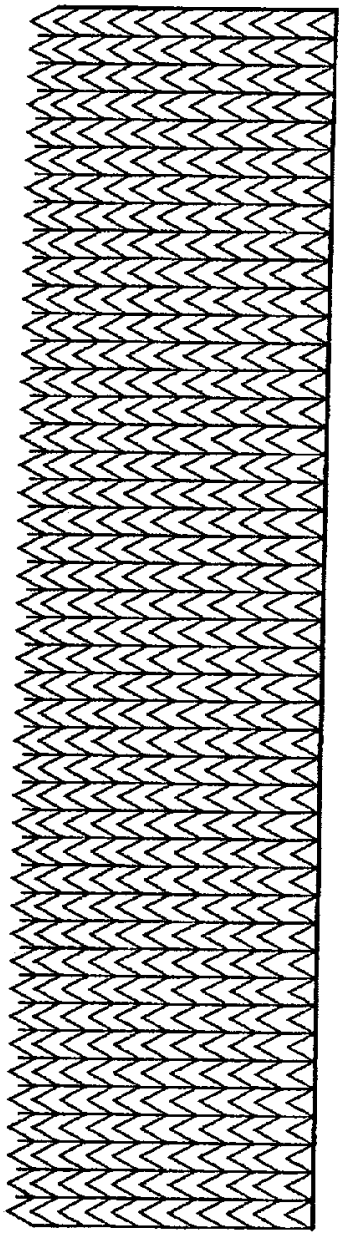

Figure 2i

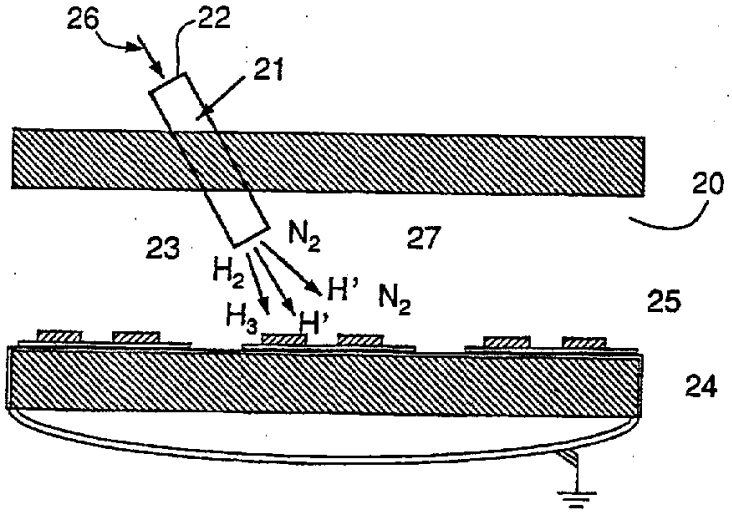

Figure 5

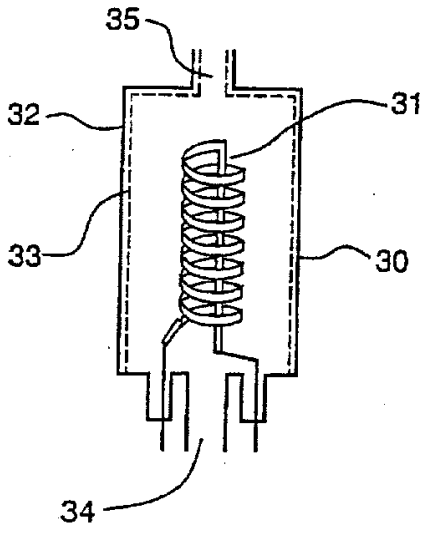

Figure 6

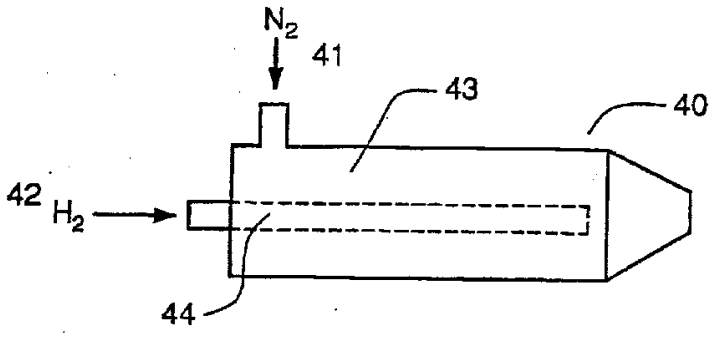

Figure 7

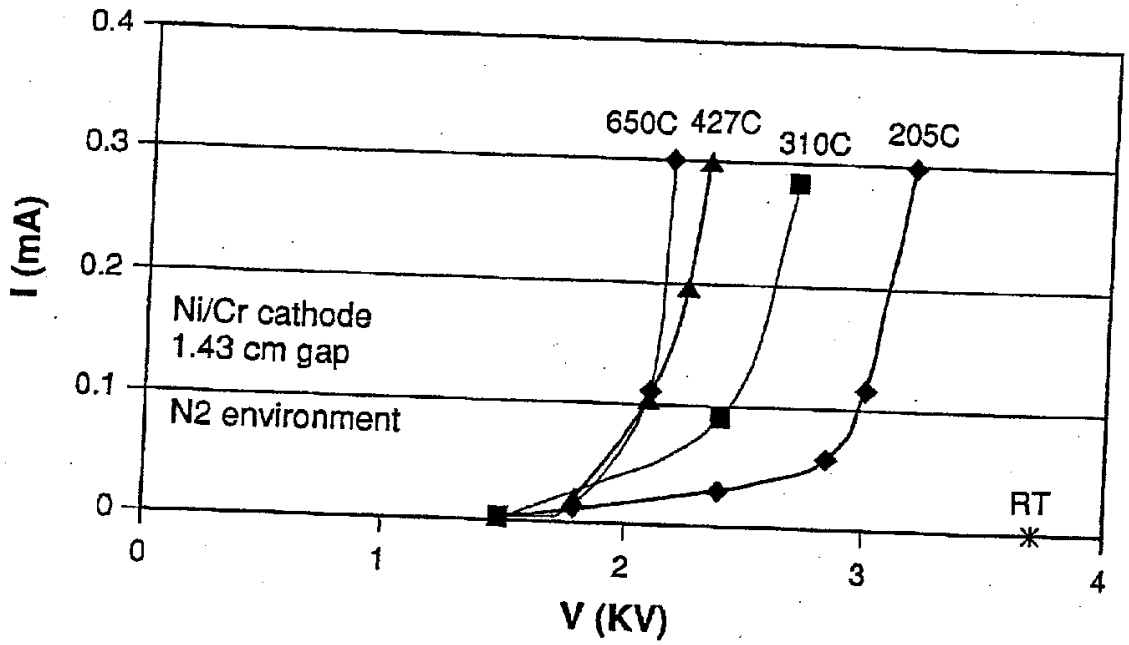

Figure 8

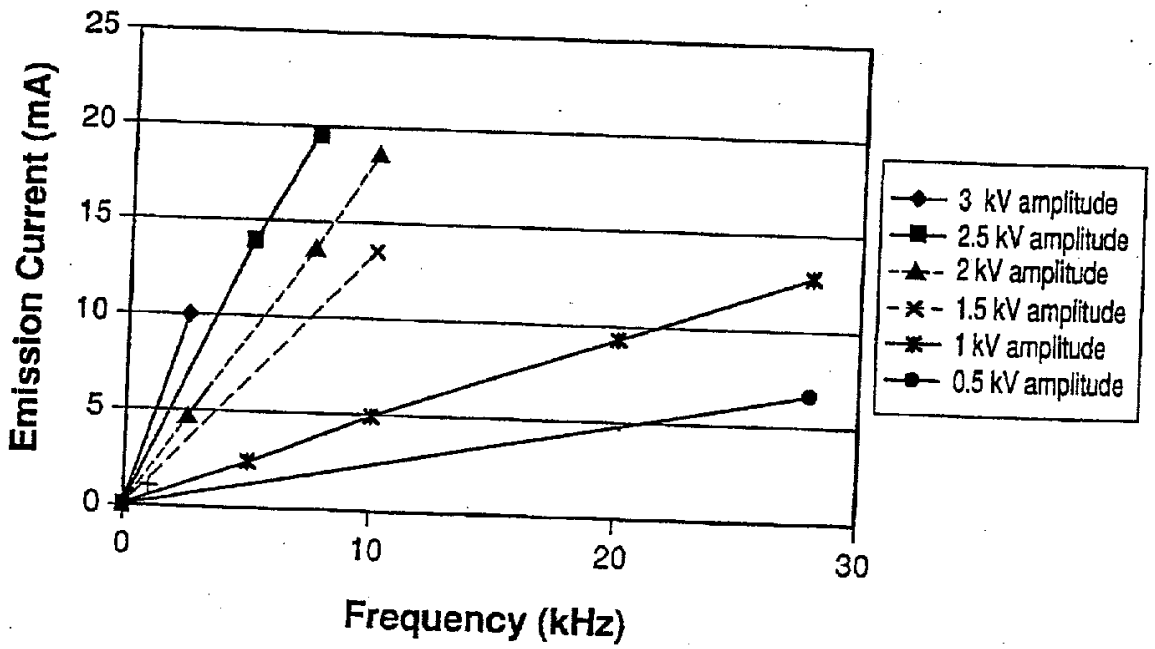

Figure 9

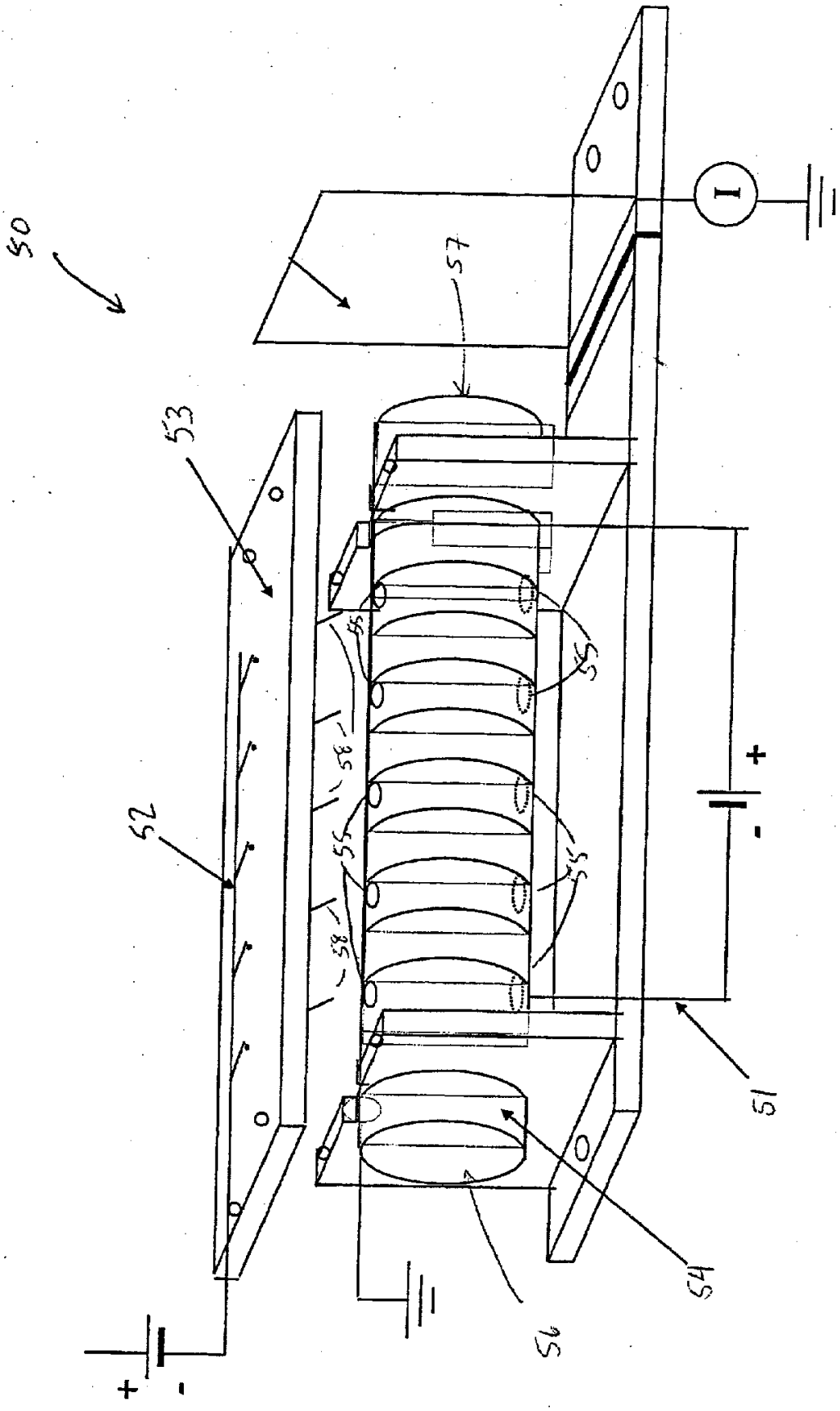

FIG. 10A

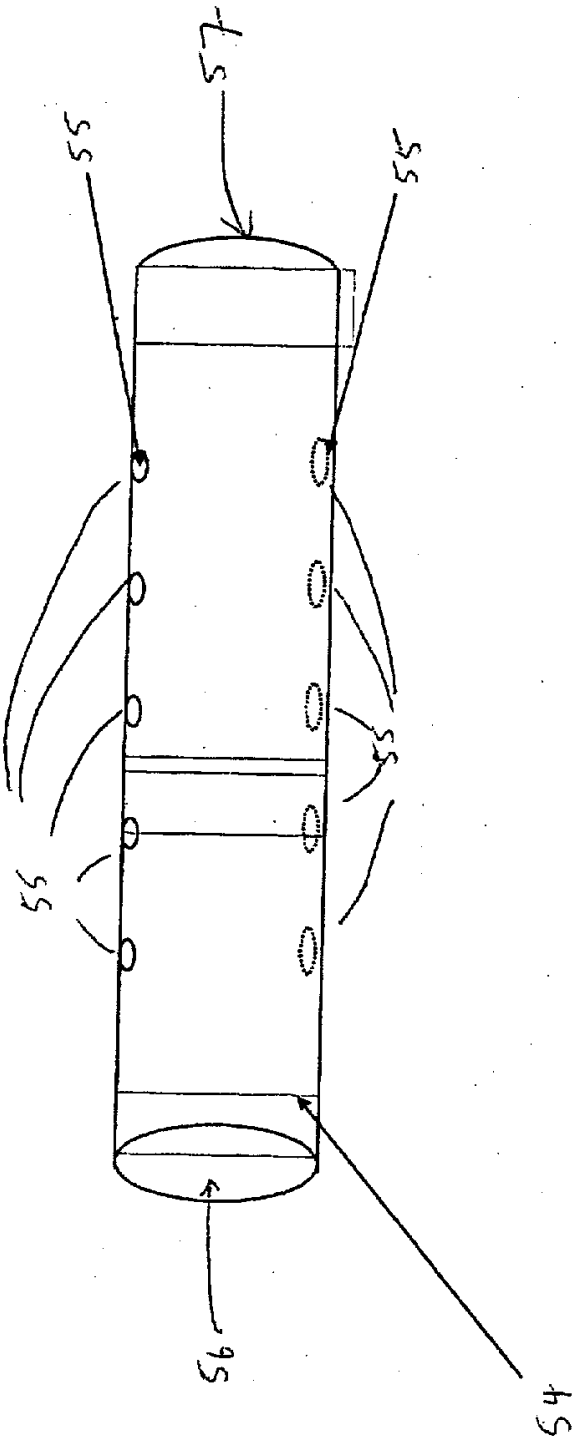

FIG. 10b

ppt00 2

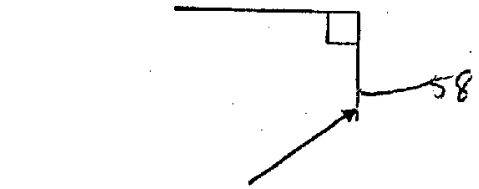

0.025" Ni/Cr Wire
With 10° Tip Sharpness

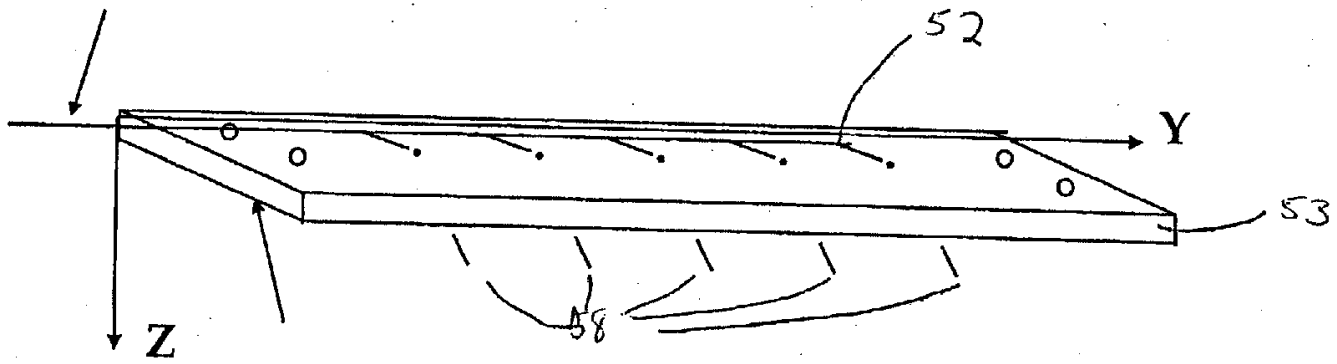

FIG. 10 C

Cathode

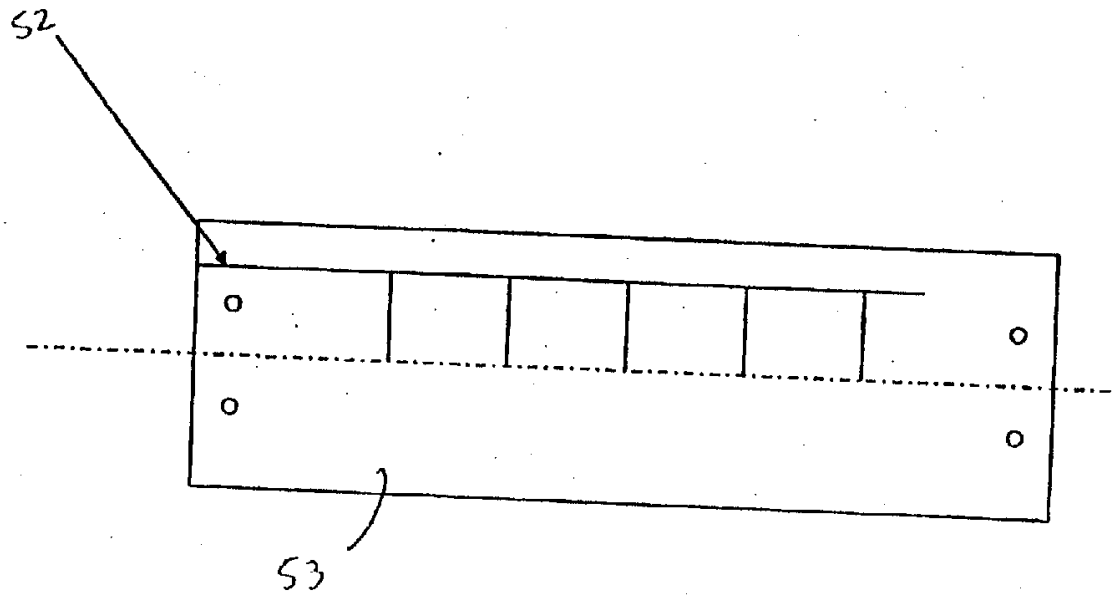

FIG. 10d