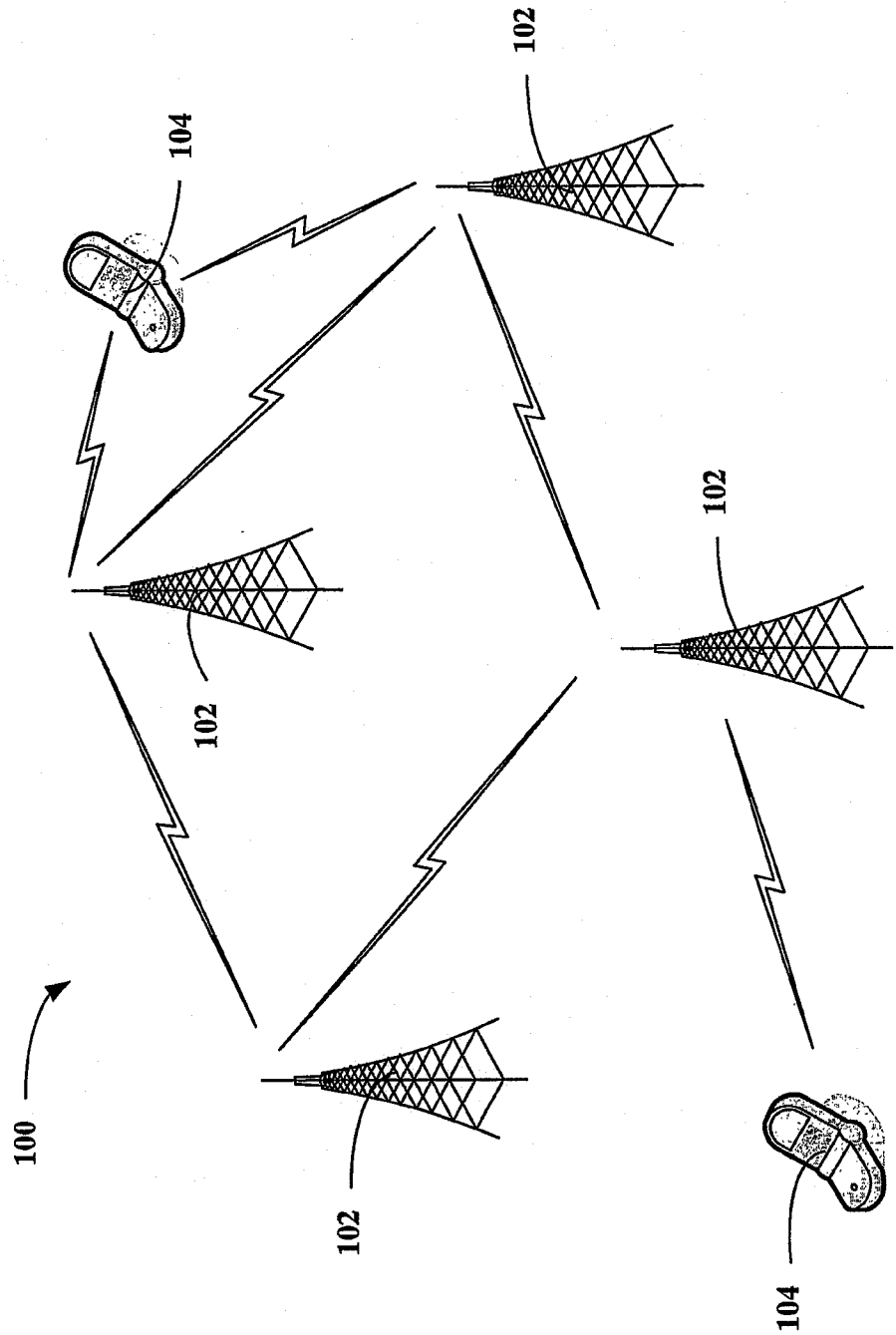

FIG. 1

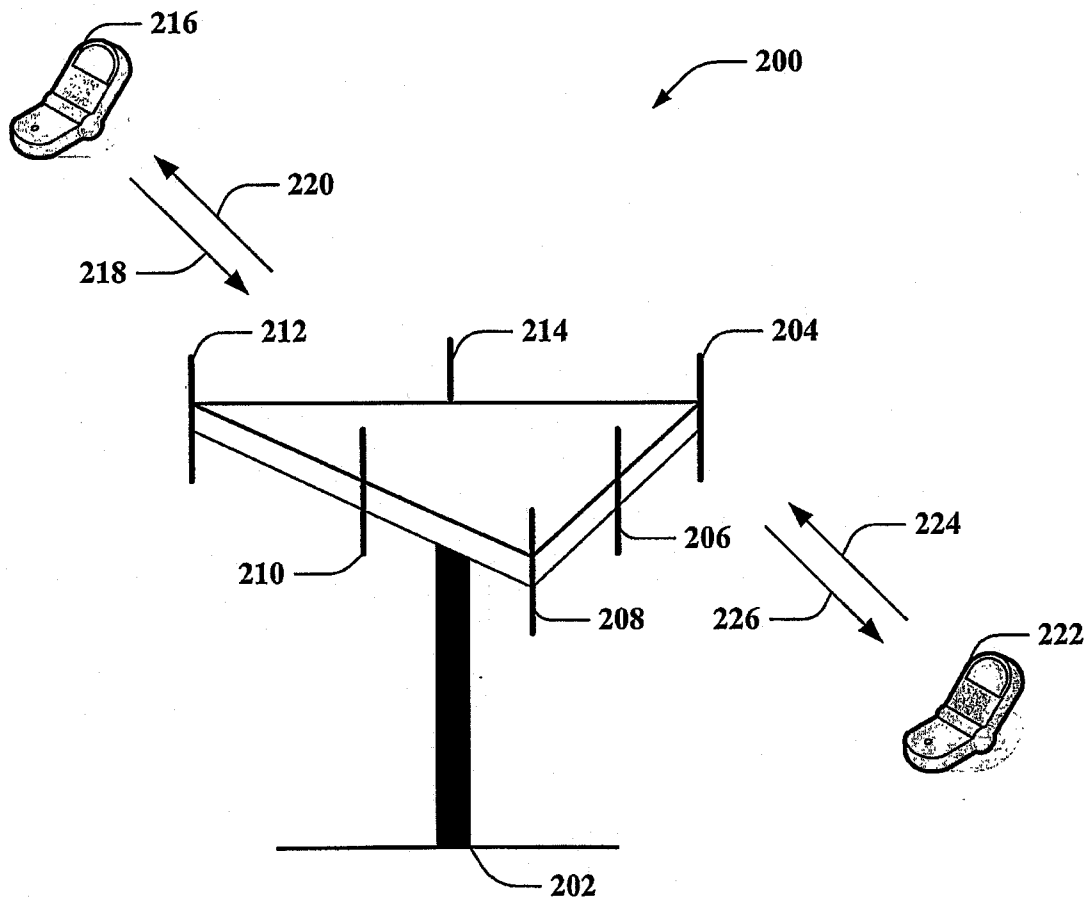

FIG. 2

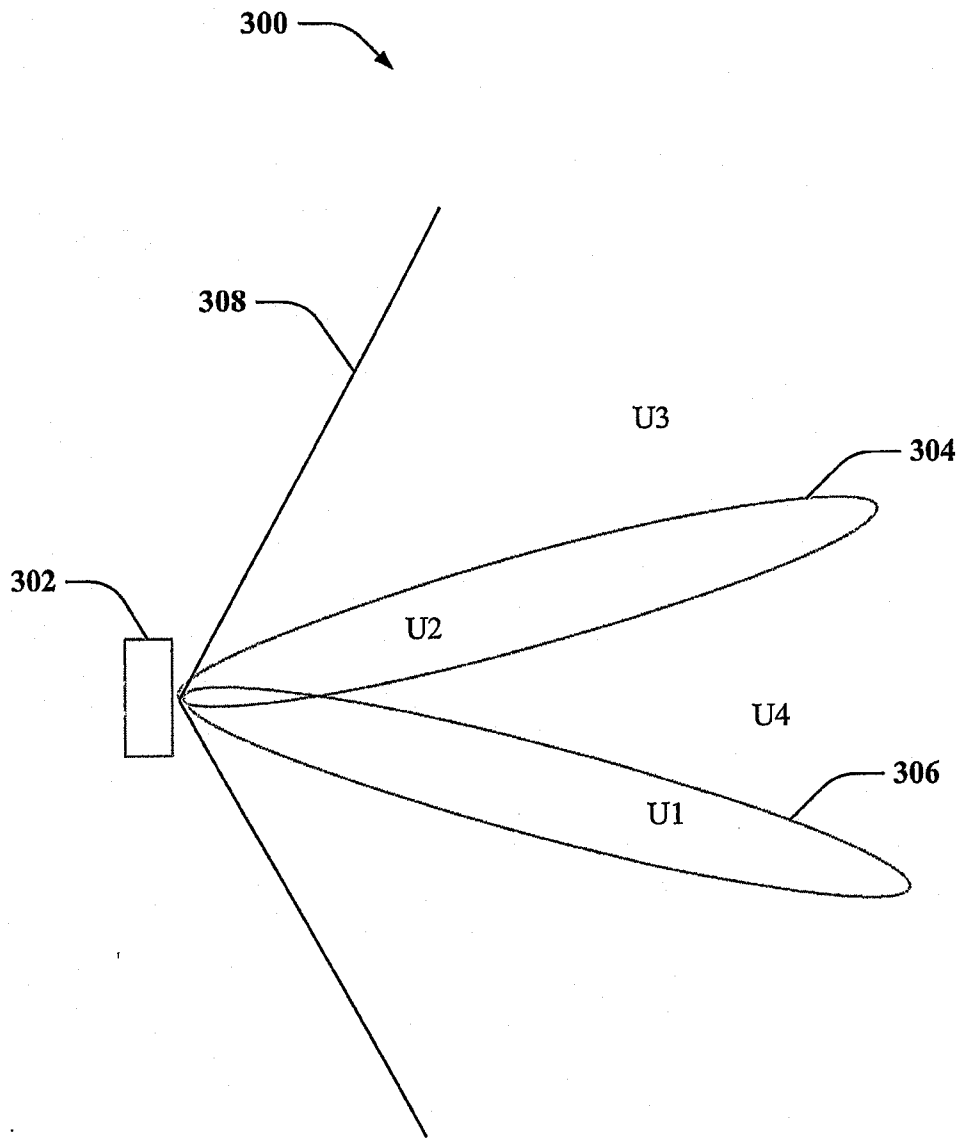

FIG. 3

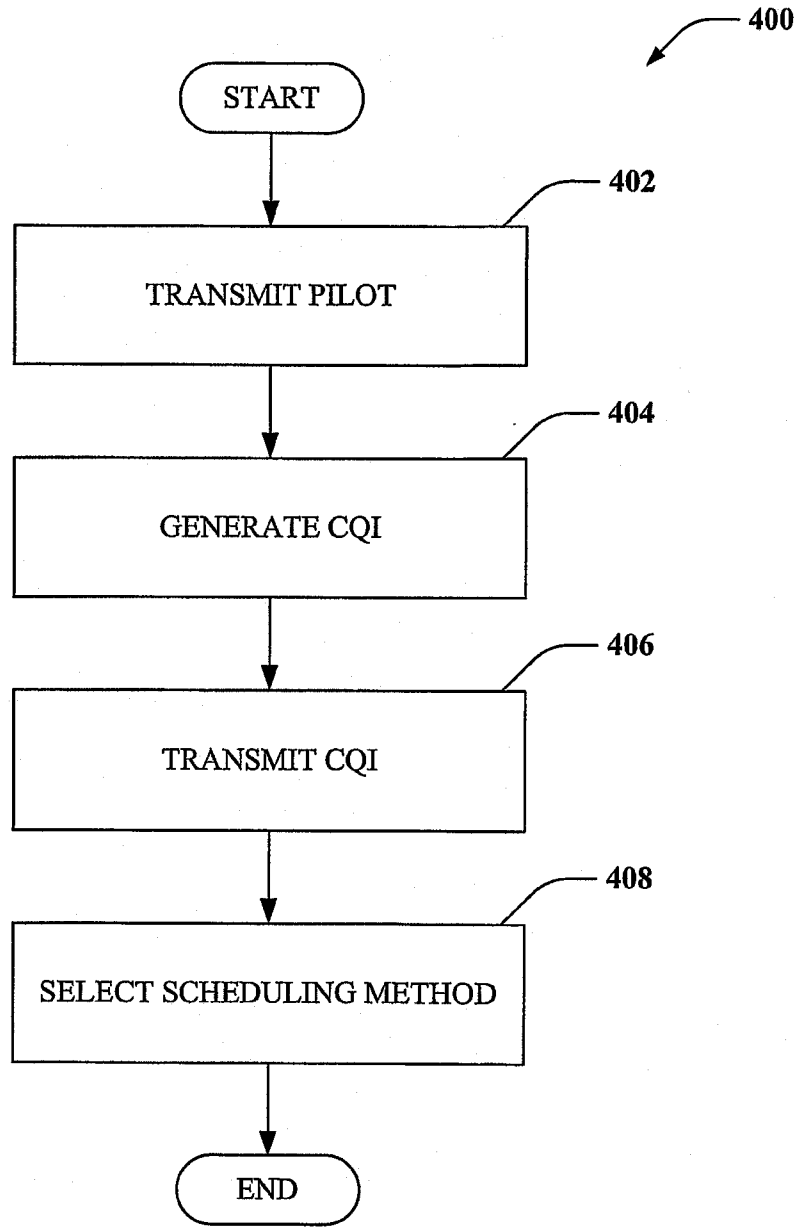
400
START
402
TRANSMIT PILOT
404
GENERATE CQI
406
TRANSMIT CQI
408
SELECT SCHEDULING METHOD
END

FIG. 4

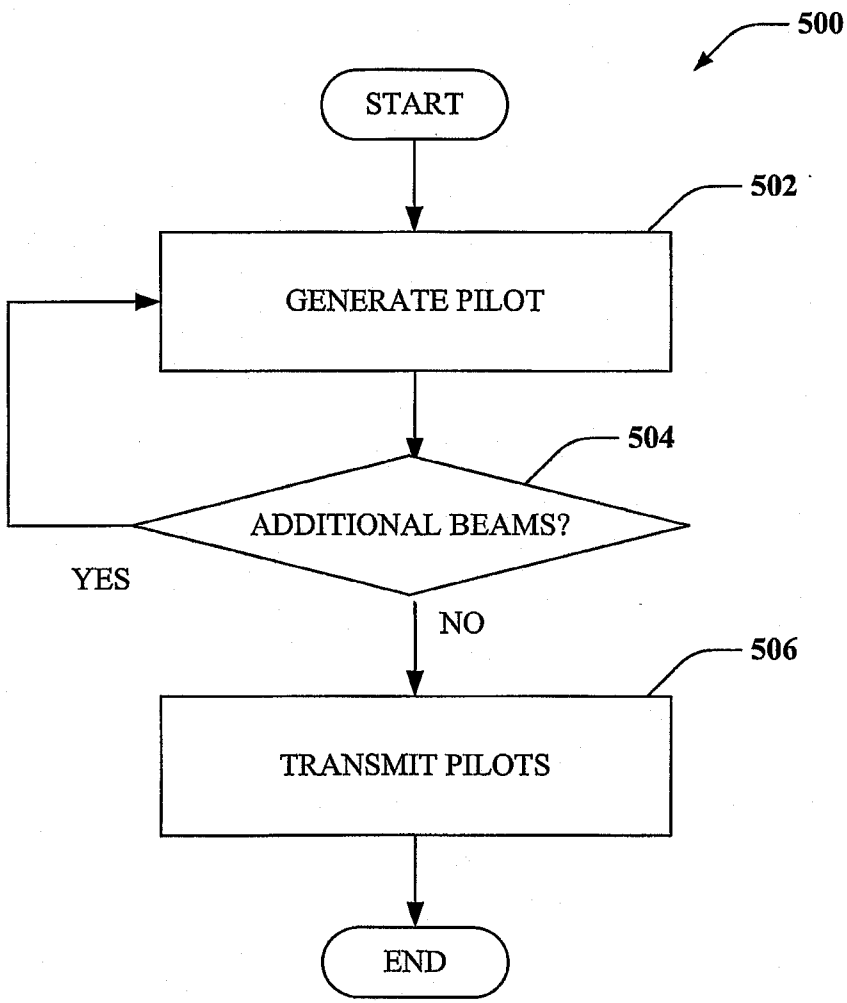
500
START
502
GENERATE PILOT
504
ADDITIONAL BEAMS?
YES
NO
506
TRANSMIT PILOTS
END

FIG. 5

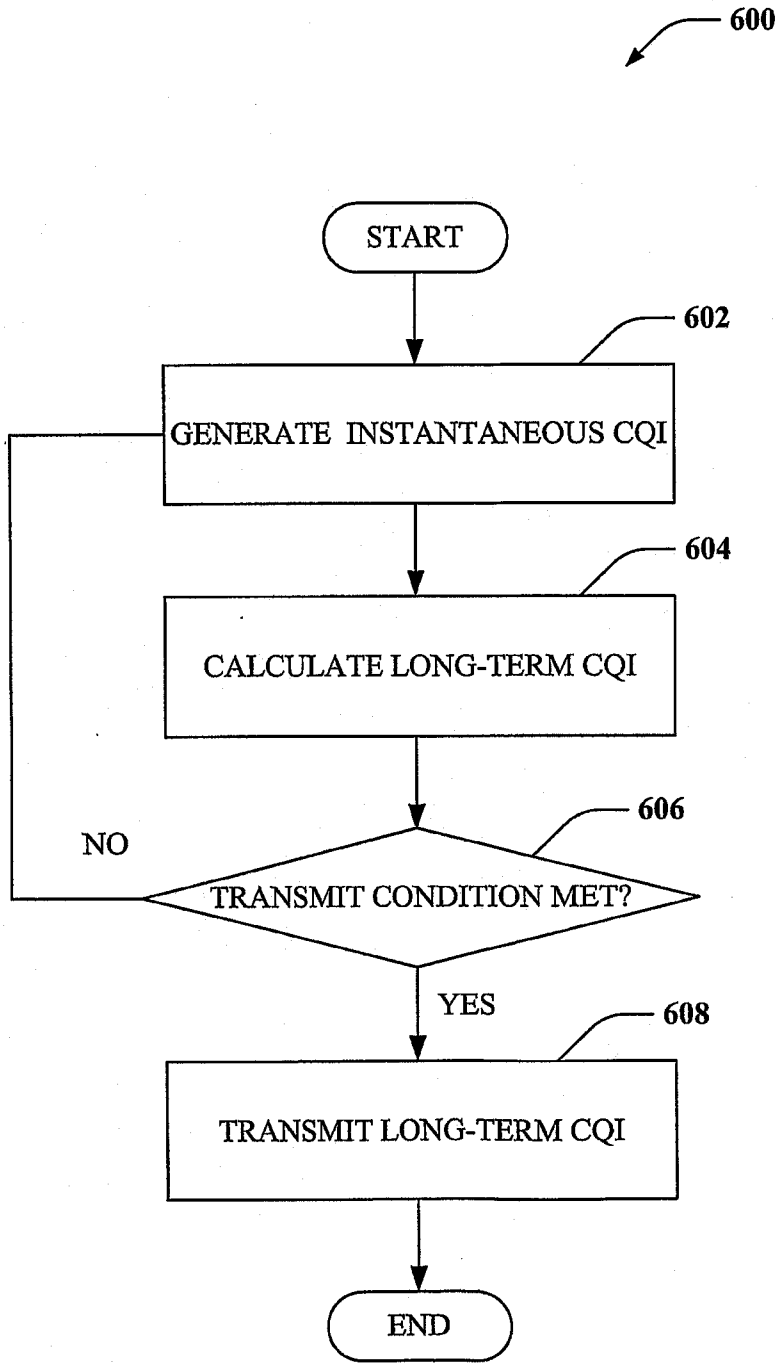
600
START
602
GENERATE INSTANTANEOUS CQI
604
CALCULATE LONG-TERM CQI
606
NO
TRANSMIT CONDITION MET?
YES
608
TRANSMIT LONG-TERM CQI
END

FIG. 6

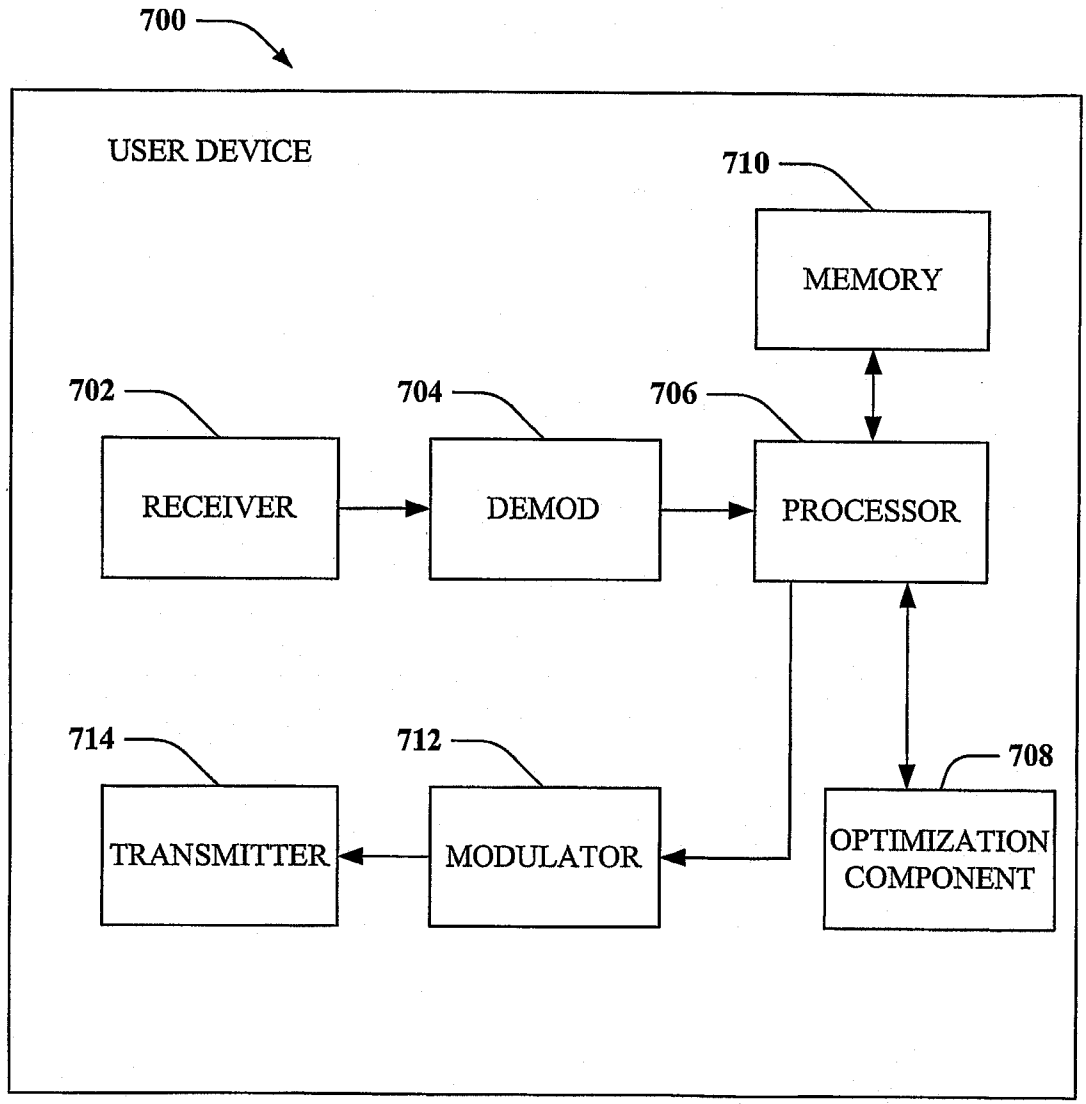
700
USER DEVICE
710
MEMORY
702
704
706
RECEIVER
DEMOD
PROCESSOR
714
712
708
TRANSMITTER
MODULATOR
OPTIMIZATION COMPONENT

FIG. 7

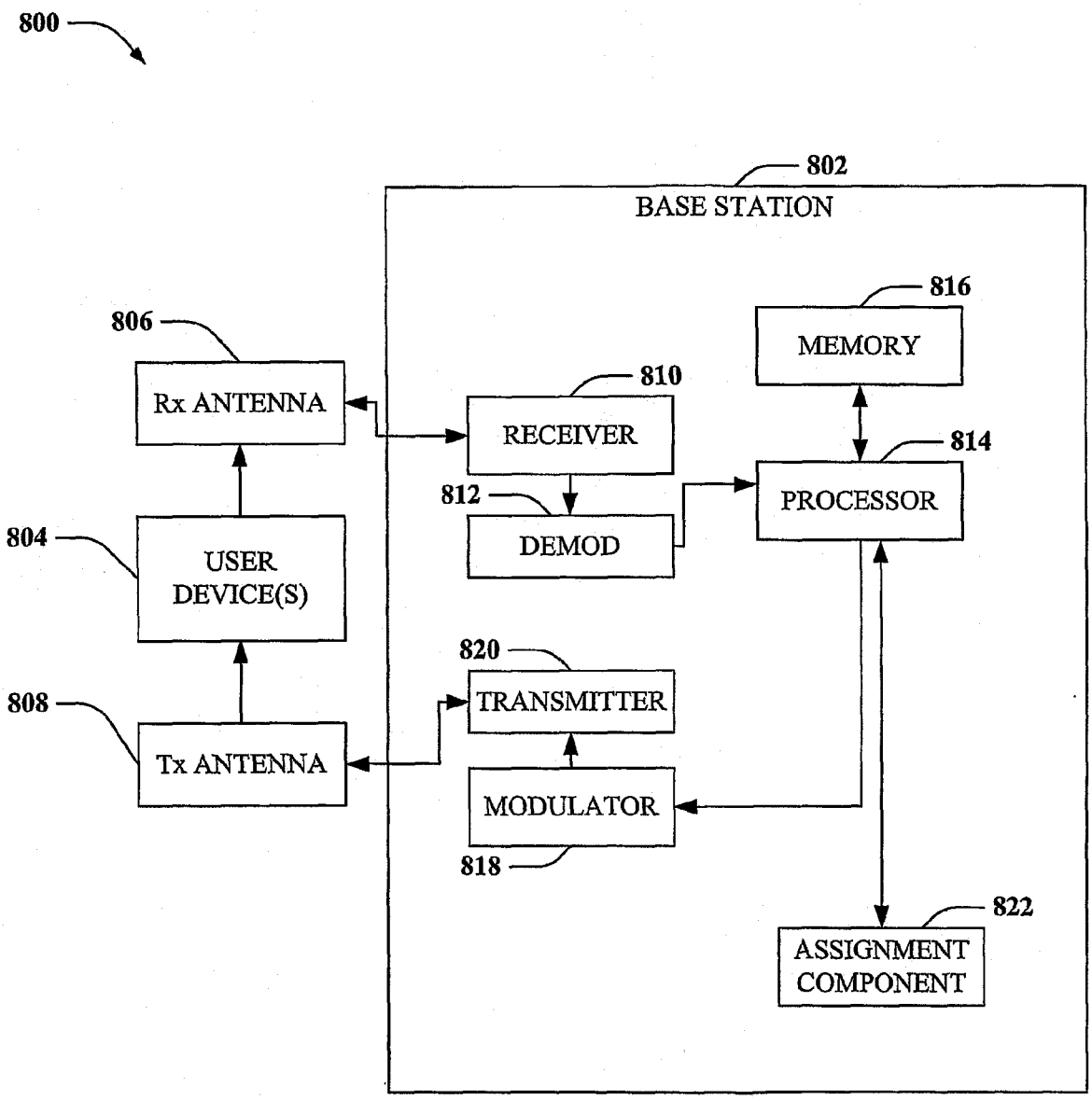
800
802
BASE STATION
816
MEMORY
806
Rx ANTENNA
810
RECEIVER
814
PROCESSOR
812
DEMOD
804
USER DEVICE(S)
820
TRANSMITTER
808
Tx ANTENNA
MODULATOR
818
822
ASSIGNMENT COMPONENT

FIG. 8

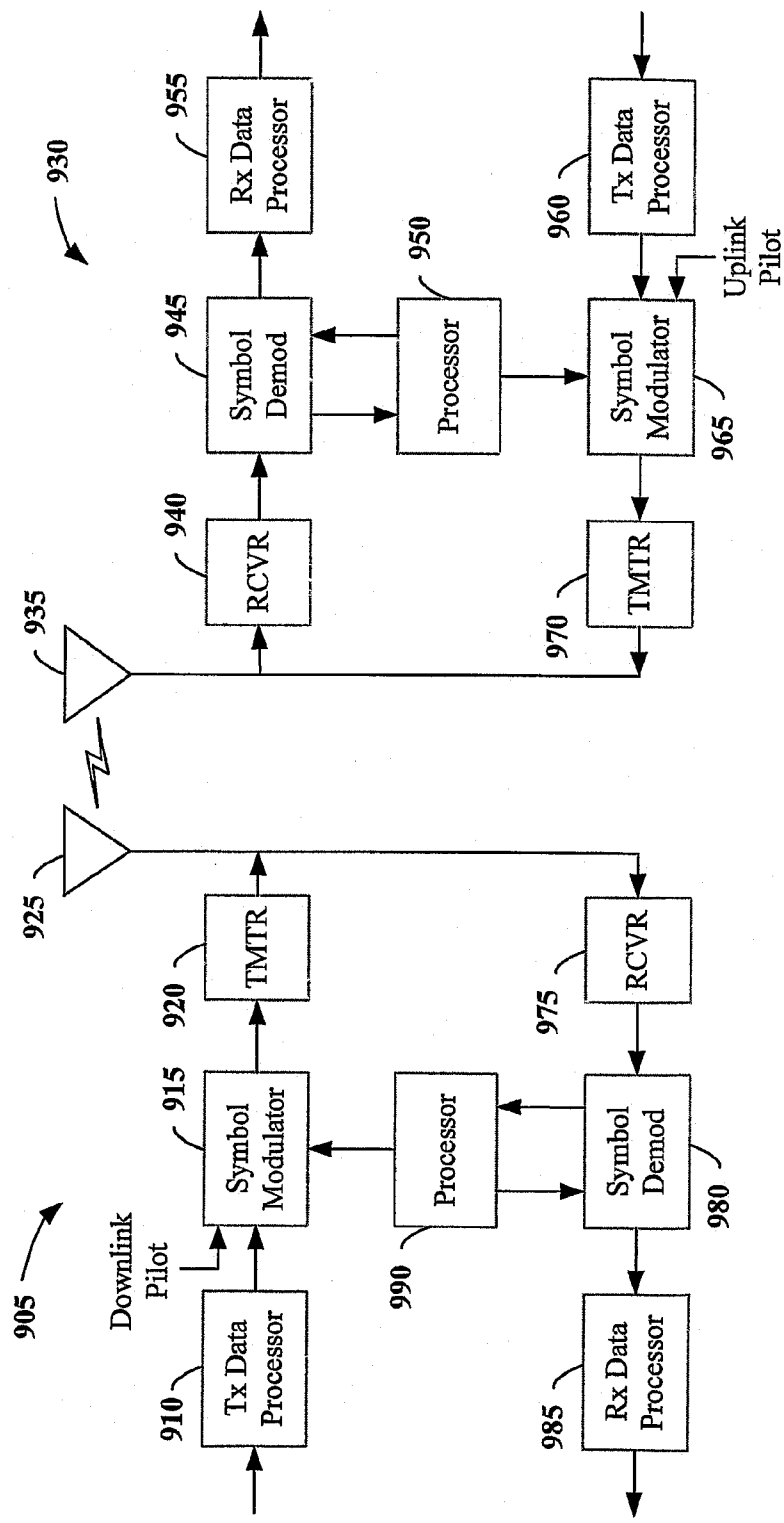
900
905
910
Tx Data Processor
Downlink Pilot
915
Symbol Modulator
920
TMTR
925
935
940
RCVR
945
Symbol Demod
950
Processor
955
Rx Data Processor
930
960
Tx Data Processor
Uplink Pilot
965
Symbol Modulator
970
TMTR
975
RCVR
980
Symbol Demod
985
Rx Data Processor
990
Processor

FIG. 9