PCT WORLD INTELLECTUAL PROPERTY ORGANIZATION
International Bureau

INTERNATIONAL APPLICATION PUBLISHED UNDER THE PATENT COOPERATION TREATY (PCT)

(51) International Patent Classification 6 : H03G 3/20 — A1

(11) International Publication Number: WO 95/30274

(43) International Publication Date: 9 November 1995 (09.11.95)

(21) International Application Number: PCT/US95/05250

(22) International Filing Date: 28 April 1995 (28.04.95)

(30) Priority Data:
235,811 28 April 1994 (28.04.94) US

(71) Applicant: QUALCOMM INCORPORATED [US/US]; 6455 Lusk Boulevard, San Diego, CA 92121 (US).

(72) Inventors: PETERZELL, Paul, E.; 6146 Calle Mariselda #203, San Diego, CA 92124 (US). WILSON, Nathaniel, B.; 11346-8 Portobelo, San Diego, CA 92124 (US). BLACK, Peter, J.; Apartment #13, 11 Austral Street, St. Lucia, QLD 4067 (AU).

(74) Agent: MILLER, Russell, B.; QUALCOMM Incorporated, 6455 Lusk Boulevard, San Diego, CA 92121 (US).

(81) Designated States: AM, AT, AU, BB, BG, BR, BY, CA, CH, CN, CZ, DE, DK, EE, ES, FI, GB, GE, HU, IS, JP, KE, KG, KP, KR, KZ, LK, LR, LT, LU, LV, MD, MG, MN, MW, MX, NO, NZ, PL, PT, RO, RU, SD, SE, SG, SI, SK, TJ, TT, UA, UZ, VN, European patent (AT, BE, CH, DE, DK, ES, FR, GB, GR, IE, IT, LU, MC, NL, PT, SE), OAPI patent (BF, BJ, CF, CG, CI, CM, GA, GN, ML, MR, NE, SN, TD, TG), ARIPO patent (KE, MW, SD, SZ, UG).

Published
With international search report.

SG 9611774-2

(54) Title: METHOD AND APPARATUS FOR AUTOMATIC GAIN CONTROL IN A DIGITAL RECEIVER

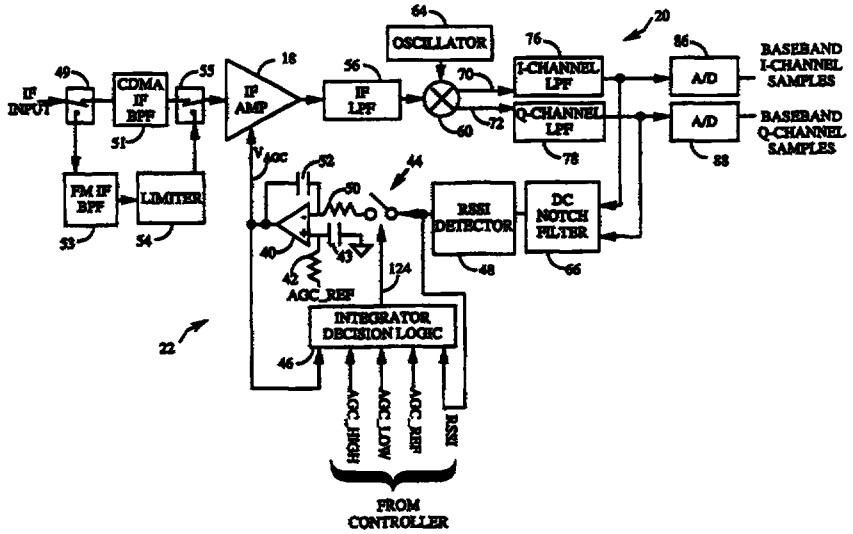

(57) Abstract

An automatic gain control (AGC) apparatus for a digital receiver is disclosed herein. The AGC apparatus includes an adjustable gain amplifier (18) having an input port for receiving an input signal, a control port for receiving a gain control signal, and an output port for providing an output signal. The AGC apparatus further includes a measurement circuit for generating a received power signal based on the power of the output signal. A saturating integrator (22) compares the received power signal to a reference signal and generates a gain control signal in response to a result of the comparison. The saturating integrator (22) includes a decision circuit (46) for enabling integration based on values of the received power signal, the reference signal, and the gain control signal. In a preferred implementation, the utilization of an input limiter in conjunction with an analog to digital converter enables accommodation of an increased input signal dynamic range.

FOR THE PURPOSES OF INFORMATION ONLY

Codes used to identify States party to the PCT on the front pages of pamphlets publishing international applications under the PCT.

AT	Austria	**GB**	United Kingdom	**MR**	Mauritania
AU	Australia	**GE**	Georgia	**MW**	Malawi
BB	Barbados	**GN**	Guinea	**NE**	Niger
BE	Belgium	**GR**	Greece	**NL**	Netherlands
BF	Burkina Faso	**HU**	Hungary	**NO**	Norway
BG	Bulgaria	**IE**	Ireland	**NZ**	New Zealand
BJ	Benin	**IT**	Italy	**PL**	Poland
BR	Brazil	**JP**	Japan	**PT**	Portugal
BY	Belarus	**KE**	Kenya	**RO**	Romania
CA	Canada	**KG**	Kyrgystan	**RU**	Russian Federation
CF	Central African Republic	**KP**	Democratic People's Republic of Korea	**SD**	Sudan
CG	Congo			**SE**	Sweden
CH	Switzerland	**KR**	Republic of Korea	**SI**	Slovenia
CI	Côte d'Ivoire	**KZ**	Kazakhstan	**SK**	Slovakia
CM	Cameroon	**LI**	Liechtenstein	**SN**	Senegal
CN	China	**LK**	Sri Lanka	**TD**	Chad
CS	Czechoslovakia	**LU**	Luxembourg	**TG**	Togo
CZ	Czech Republic	**LV**	Latvia	**TJ**	Tajikistan
DE	Germany	**MC**	Monaco	**TT**	Trinidad and Tobago
DK	Denmark	**MD**	Republic of Moldova	**UA**	Ukraine
ES	Spain	**MG**	Madagascar	**US**	United States of America
FI	Finland	**ML**	Mali	**UZ**	Uzbekistan
FR	France	**MN**	Mongolia	**VN**	Viet Nam
GA	Gabon				

9611774-2