(12) INTERNATIONAL APPLICATION PUBLISHED UNDER THE PATENT COOPERATION TREATY (PCT)

(19) World Intellectual Property Organization
International Bureau

(43) International Publication Date
9 August 2007 (09.08.2007)

PCT

(10) International Publication Number
WO 2007/087668 A1

(51) International Patent Classification:
A61F 2/46 (2006.01)

(21) International Application Number:
PCT/AU2006/000111

(22) International Filing Date: 31 January 2006 (31.01.2006)

(25) Filing Language: English

(26) Publication Language: English

(71) Applicant *(for all designated States except US)*: **ELLYSIAN LIMITED**; C/Craigmuir Chambers, Road Town, Tortola, Grand Cayman (VG).

(72) Inventor; and

(75) Inventor/Applicant *(for US only)*: **LYE, Bob** [AU/AU]; 6 Roger Street, Brookvale, NSW 2100 (AU).

(74) Agent: **F B RICE & CO**; Patent Attorneys, Level 23, 200 Queen Street, Melbourne, VIC 3000 (AU).

(81) Designated States *(unless otherwise indicated, for every kind of national protection available)*: AE, AG, AL, AM, AT, AU, AZ, BA, BB, BG, BR, BW, BY, BZ, CA, CH, CN, CO, CR, CU, CZ, DE, DK, DM, DZ, EC, EE, EG, ES, FI, GB, GD, GE, GH, GM, HR, HU, ID, IL, IN, IS, JP, KE, KG, KM, KN, KP, KR, KZ, LC, LK, LR, LS, LT, LU, LV, LY, MA, MD, MG, MK, MN, MW, MX, MZ, NA, NG, NI, NO, NZ, OM, PG, PH, PL, PT, RO, RU, SC, SD, SE, SG, SK, SL, SM, SY, TJ, TM, TN, TR, TT, TZ, UA, UG, US, UZ, VC, VN, YU, ZA, ZM, ZW.

(84) Designated States *(unless otherwise indicated, for every kind of regional protection available)*: ARIPO (BW, GH, GM, KE, LS, MW, MZ, NA, SD, SL, SZ, TZ, UG, ZM, ZW), Eurasian (AM, AZ, BY, KG, KZ, MD, RU, TJ, TM), European (AT, BE, BG, CH, CY, CZ, DE, DK, EE, ES, FI, FR, GB, GR, HU, IE, IS, IT, LT, LU, LV, MC, NL, PL, PT, RO, SE, SI, SK, TR), OAPI (BF, BJ, CF, CG, CI, CM, GA, GN, GQ, GW, ML, MR, NE, SN, TD, TG).

Published:
— *with international search report*

For two-letter codes and other abbreviations, refer to the "Guidance Notes on Codes and Abbreviations" appearing at the beginning of each regular issue of the PCT Gazette.

(54) Title: POSITIONING BRACKET

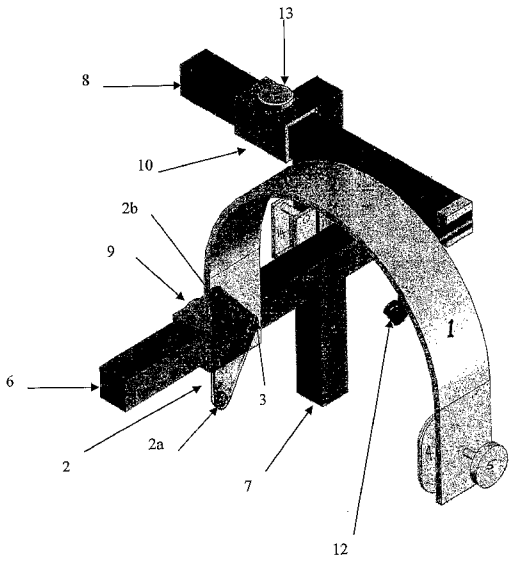

(57) Abstract: A positioning bracket for a surgical procedure to assist in determining the correct placement and/or alignment of a surgical device for a patient, said positioning bracket comprising a first arm (1) mounted on a support frame (6,7), a rear positioning pad (4) located on the first arm (1) adjacent an end of the first arm for placement on the patient, a front positioning pad (2) located on the' first arm (1) adjacent the other end of the first arm for placement on the patient, and a second arm (8) mounted on the support frame (6,7), the second arm (8) comprising a connector (12) adjacent an end of the second arm (8) to receive a surgical device, wherein the support frame (6,7) permits the connector (12) to be positioned relative to the rear positioning pad (4) and front positioning pad (2).

WO 2007/087668 A1