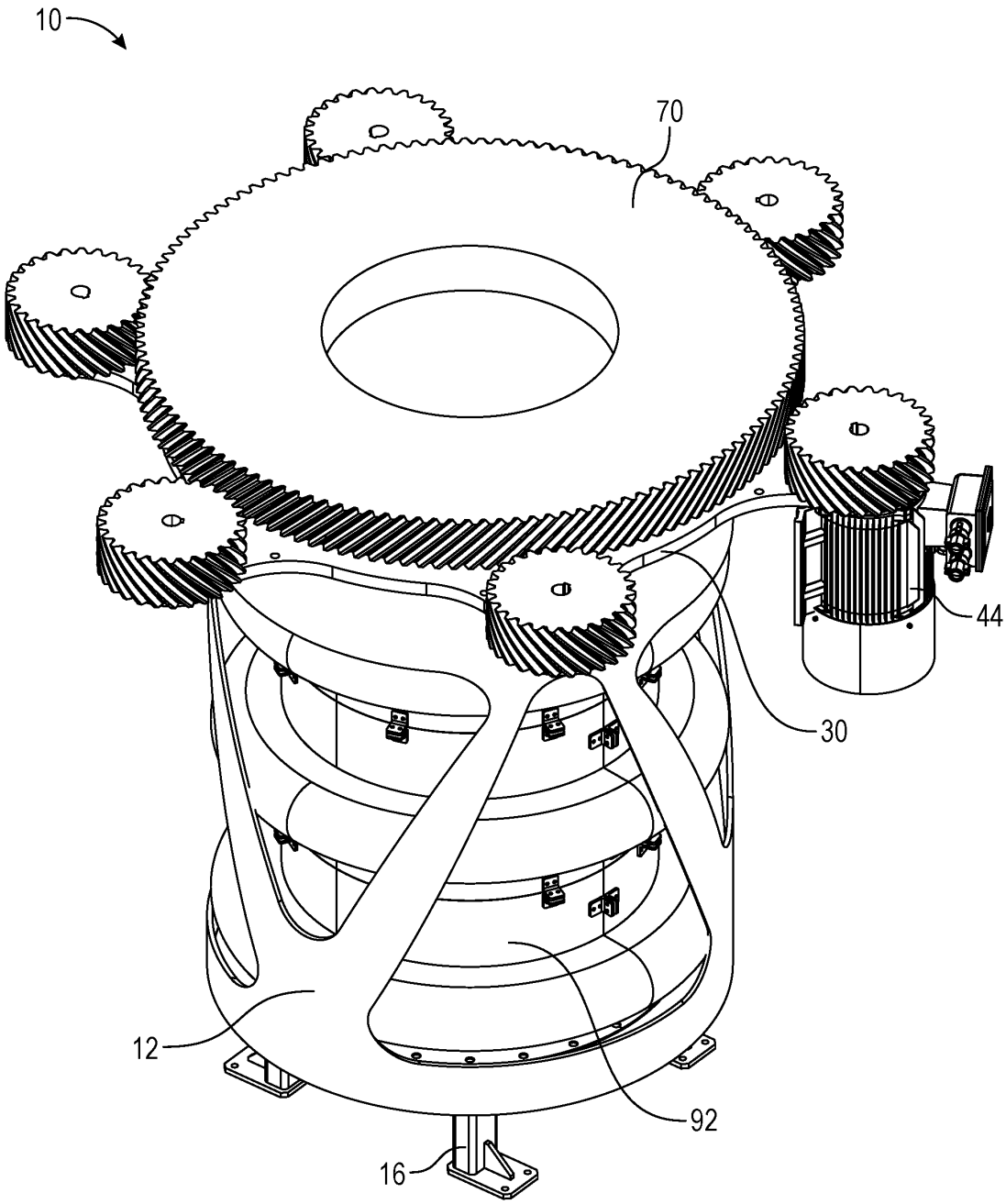

FIG. 1A

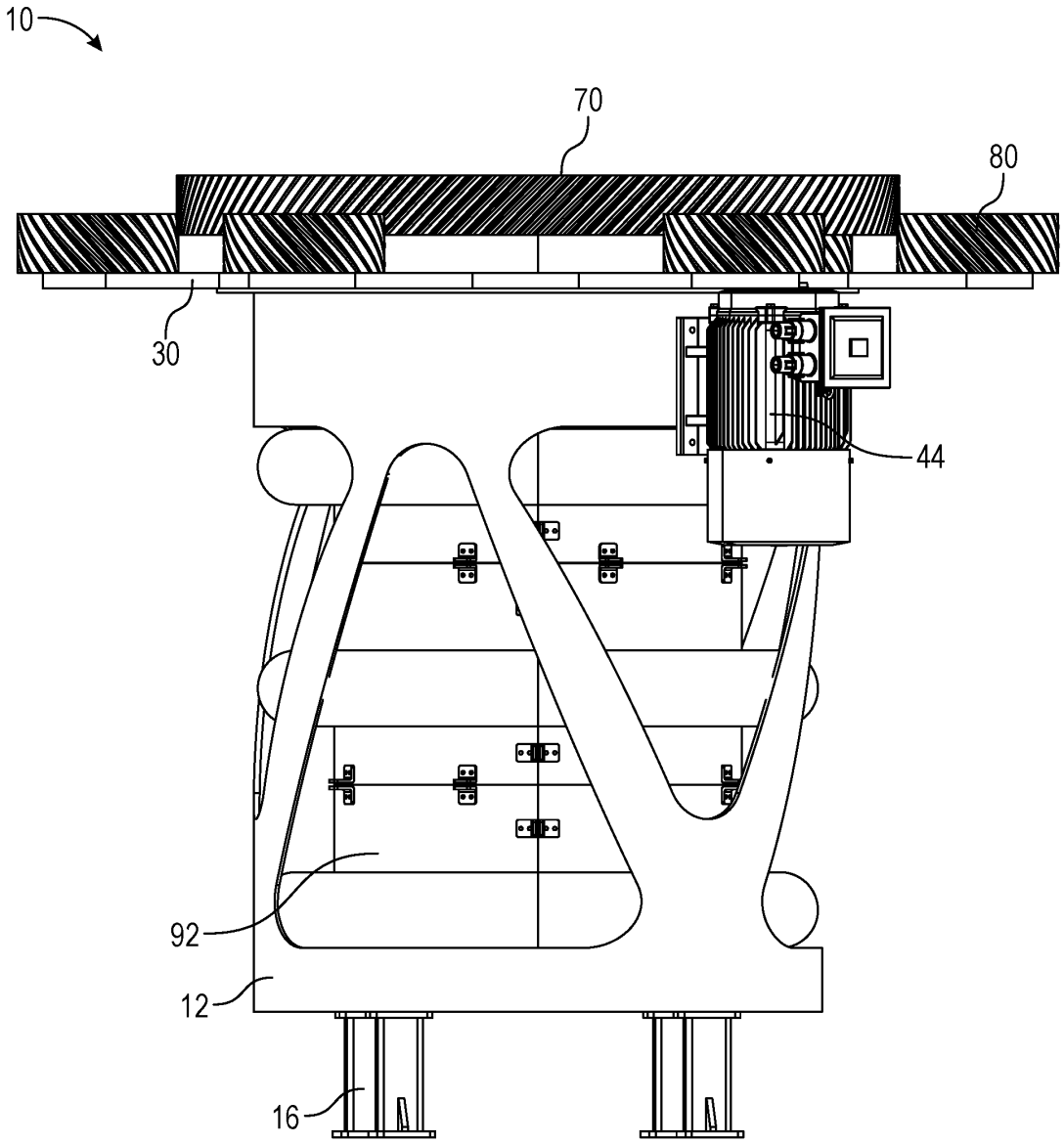

FIG. 1B

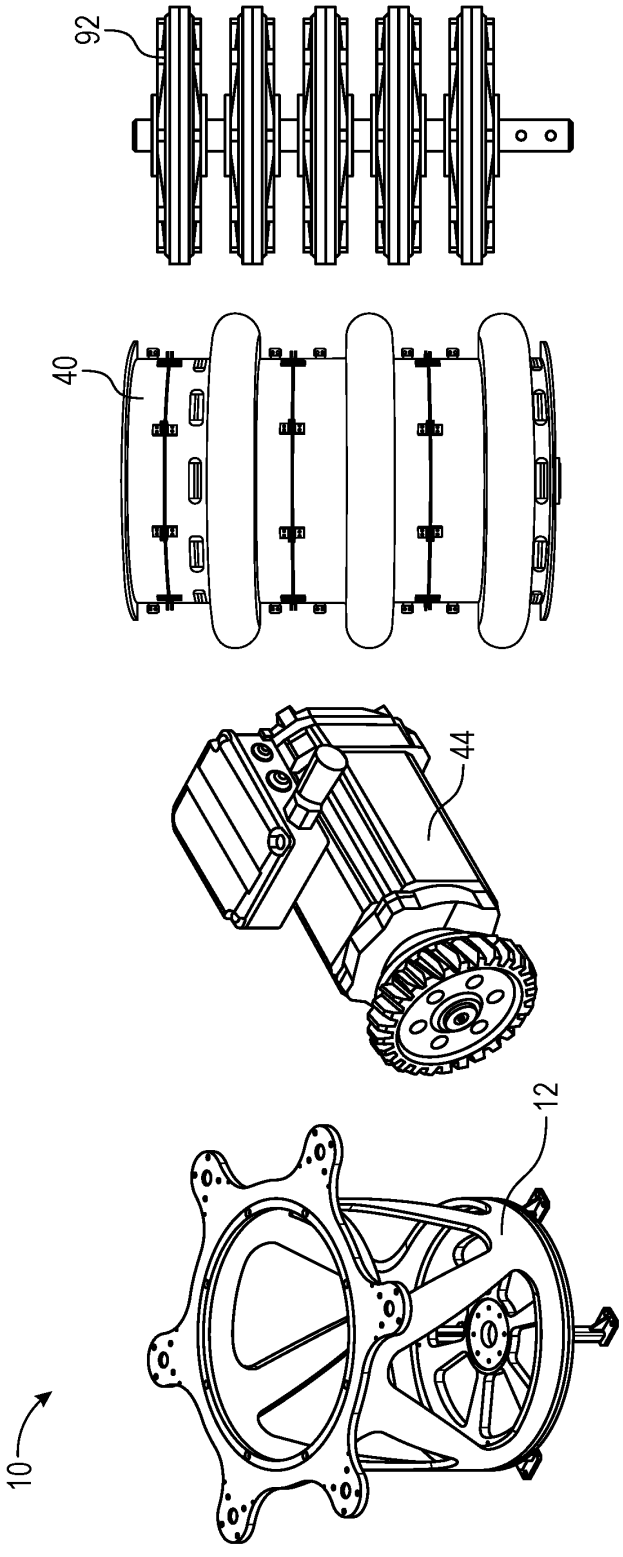

FIG. 2

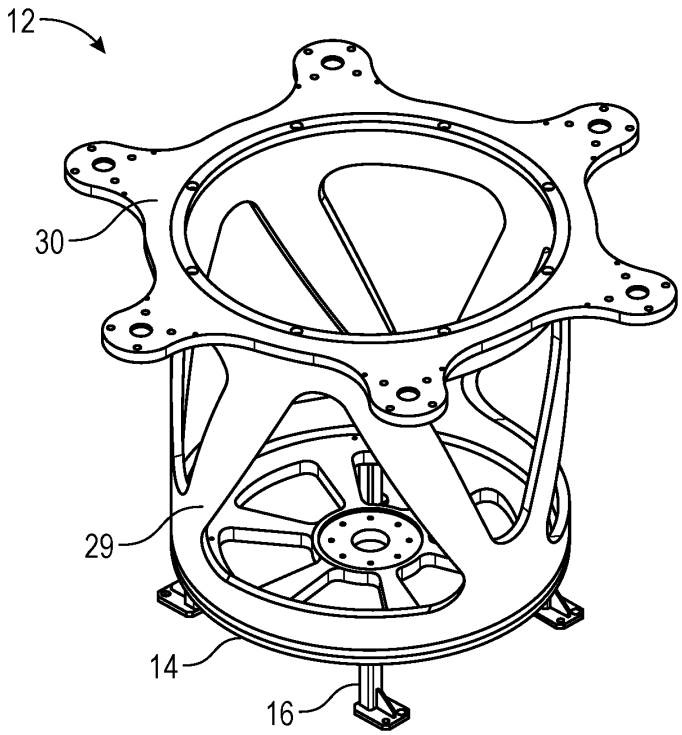

FIG. 3

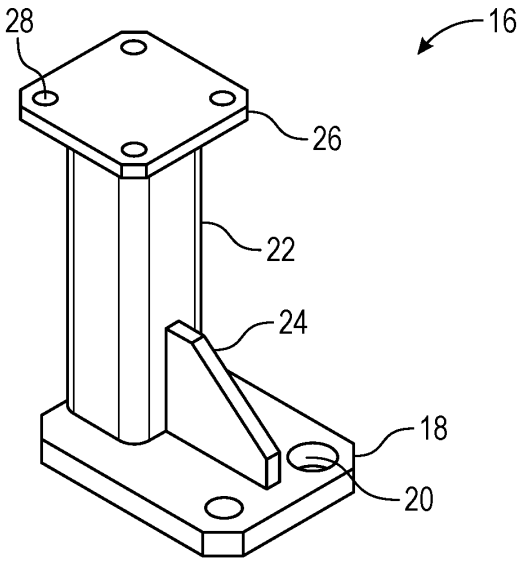

FIG. 4

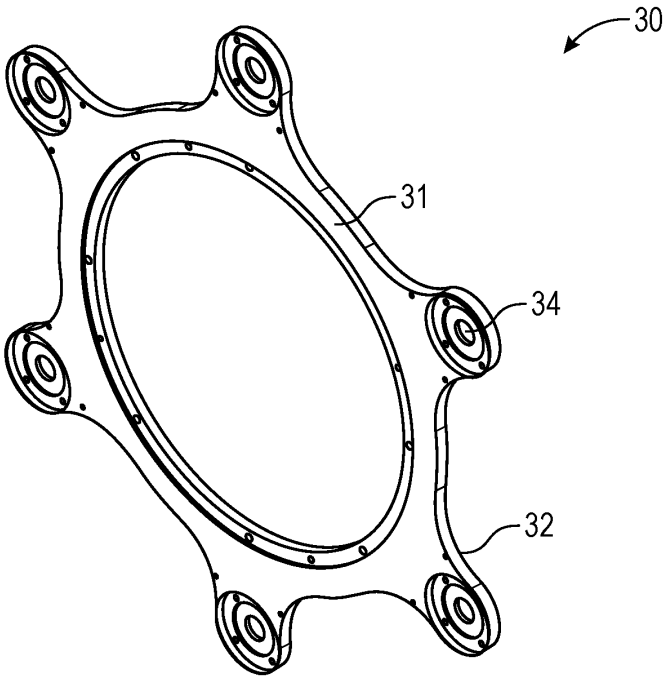

FIG. 5

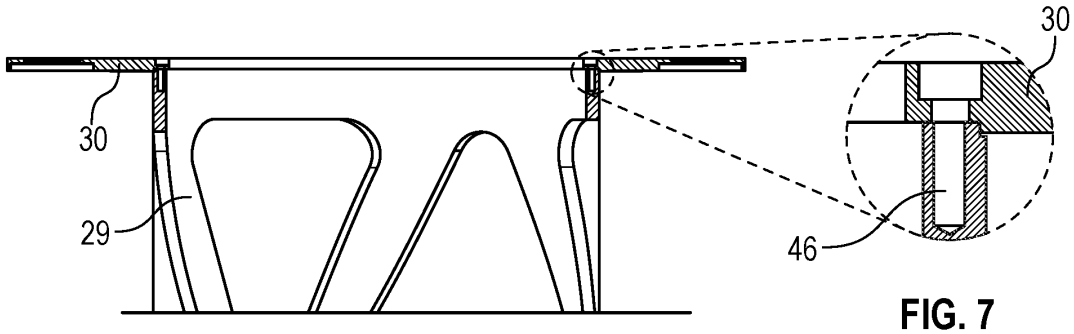

FIG. 7

FIG. 6

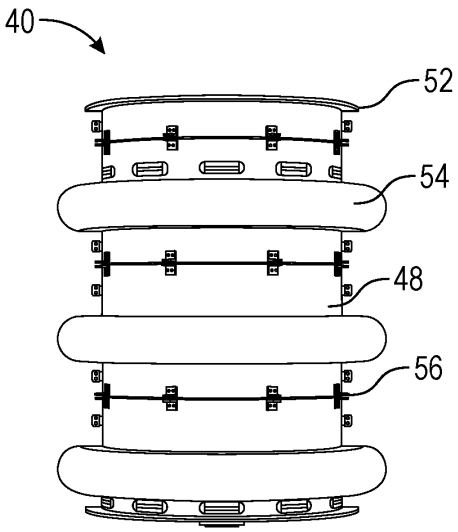

FIG. 8

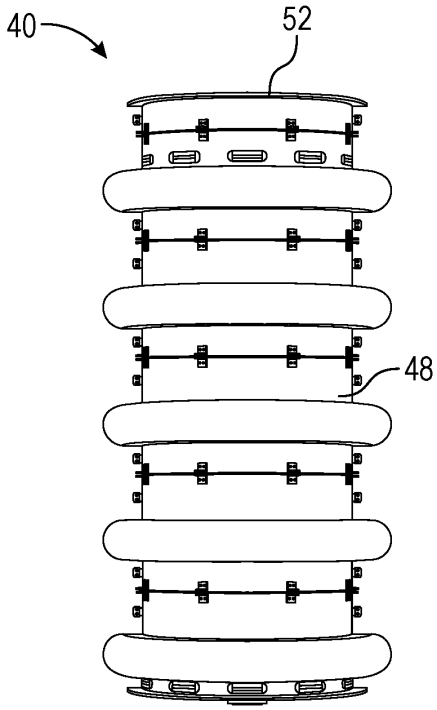

FIG. 9

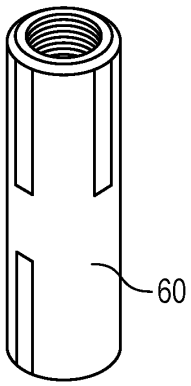

FIG. 10

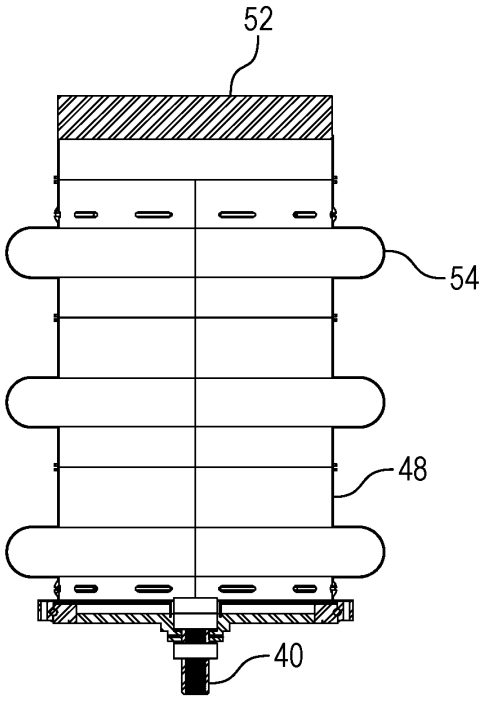

FIG. 11

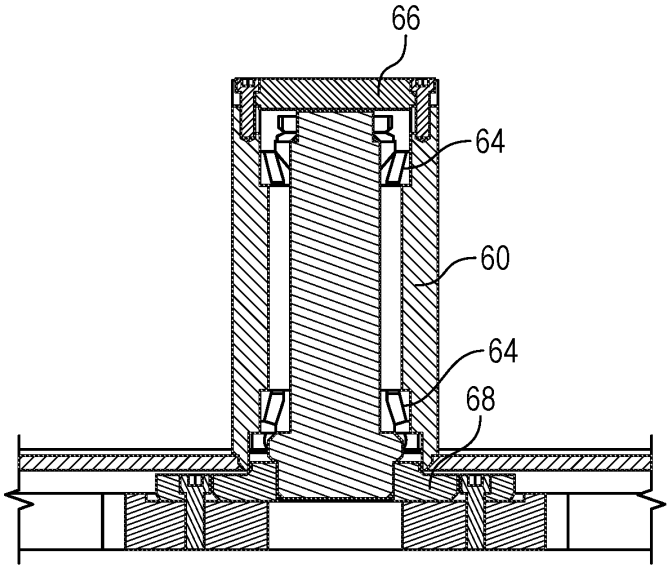

FIG. 12

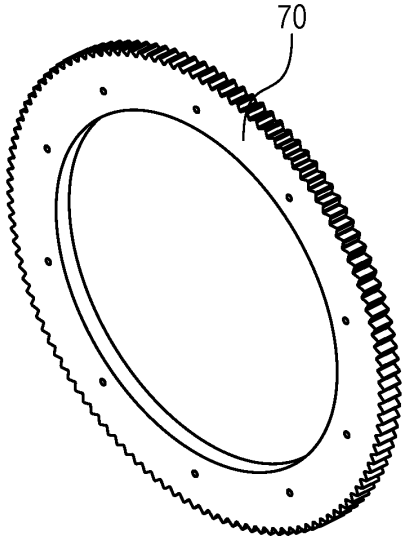

FIG. 13

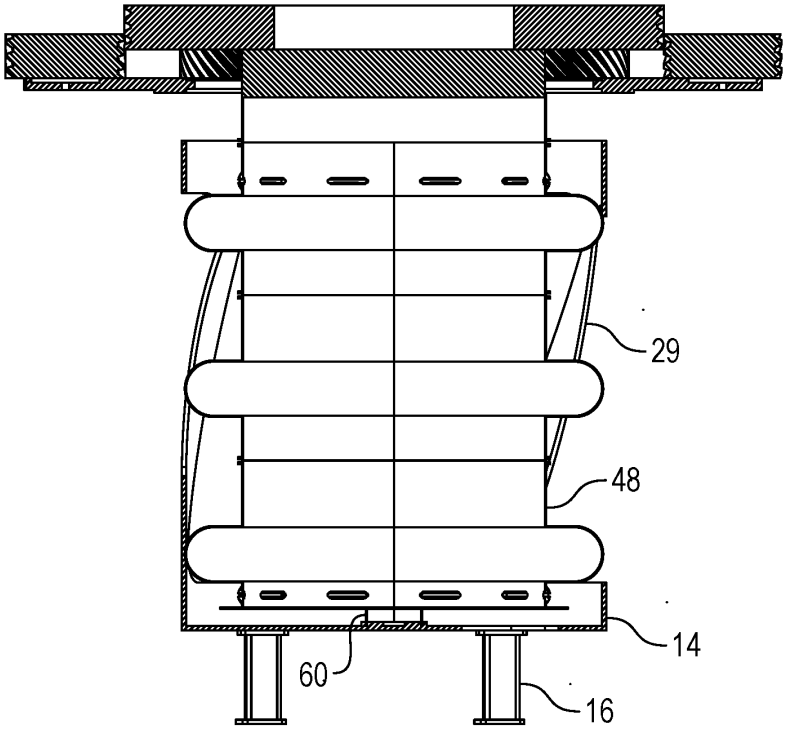

FIG. 14

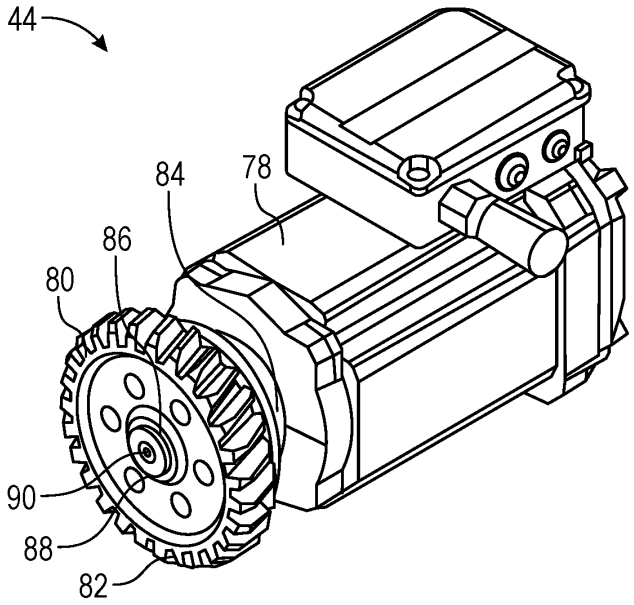

FIG. 15

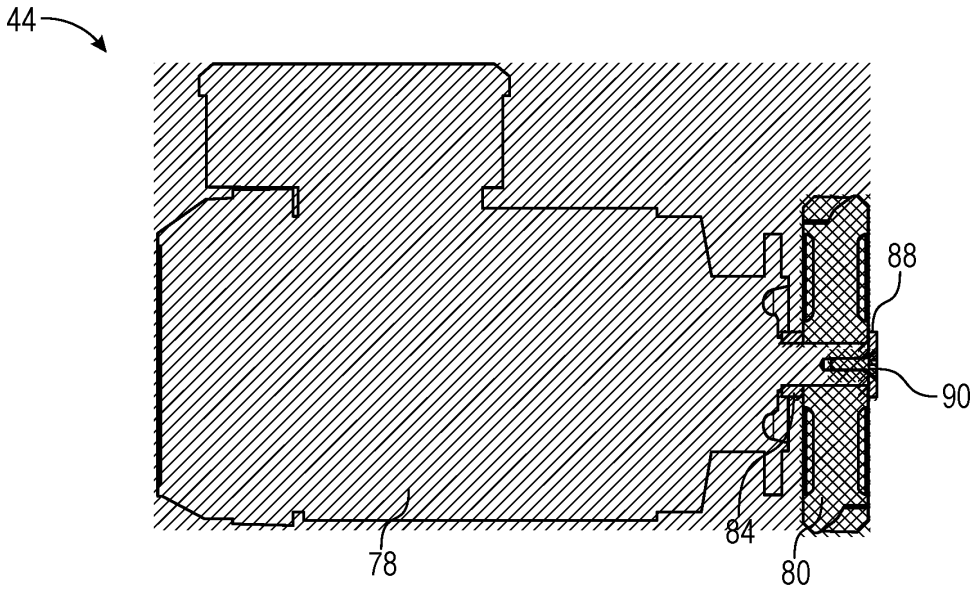

FIG. 16

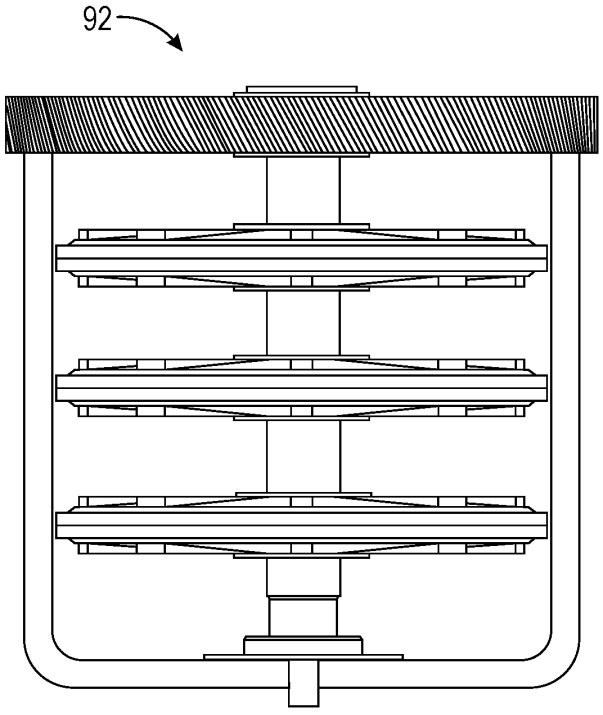

FIG. 17

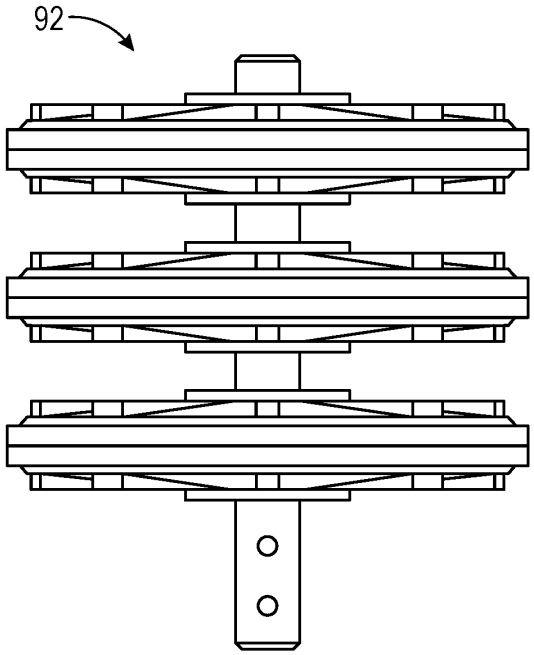

FIG. 18

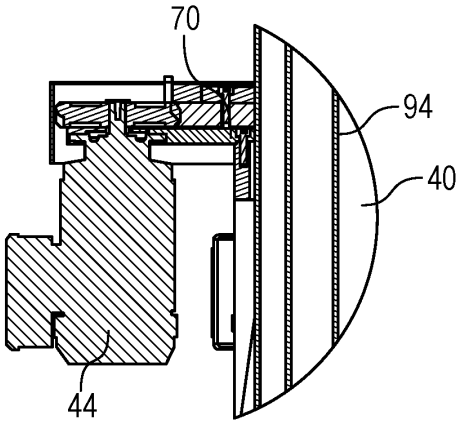

FIG. 19

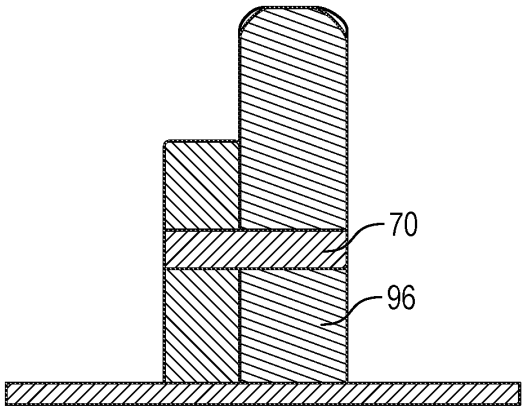

FIG. 20

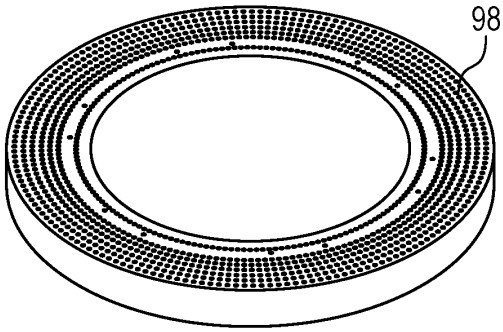

FIG. 21

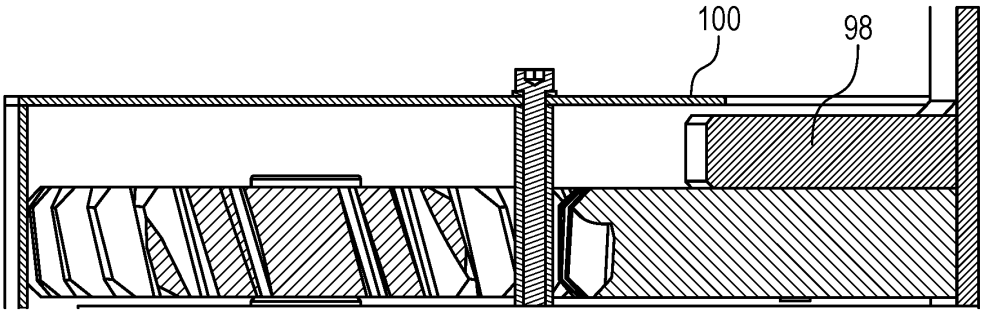

FIG. 22

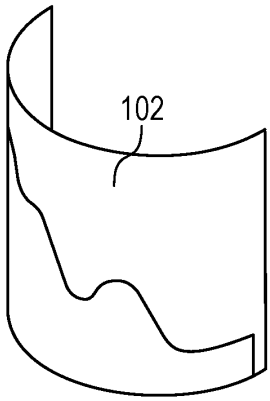

FIG. 23

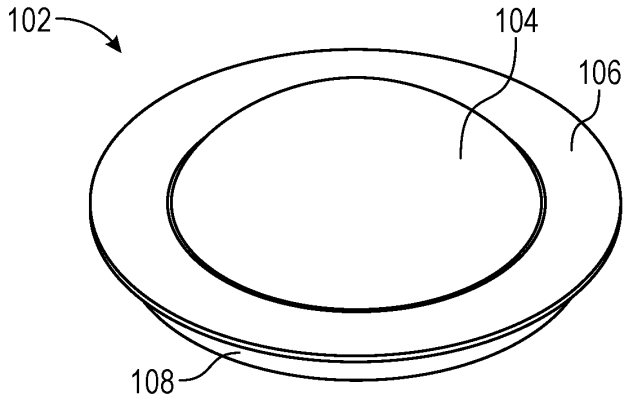

FIG. 24

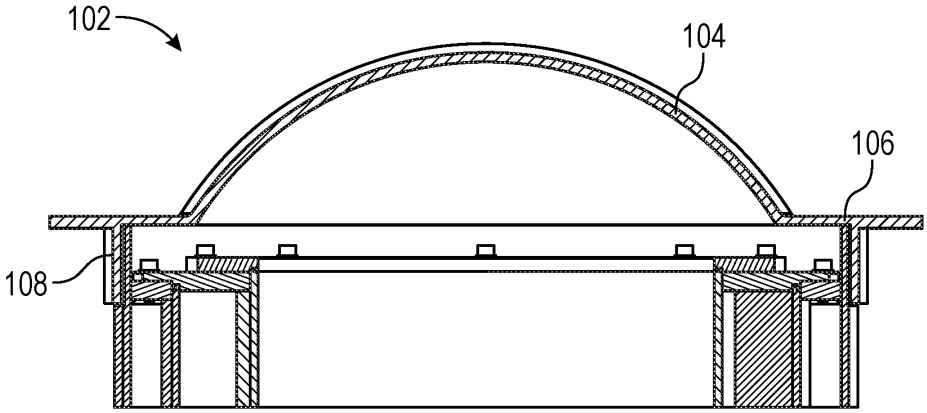

FIG. 25

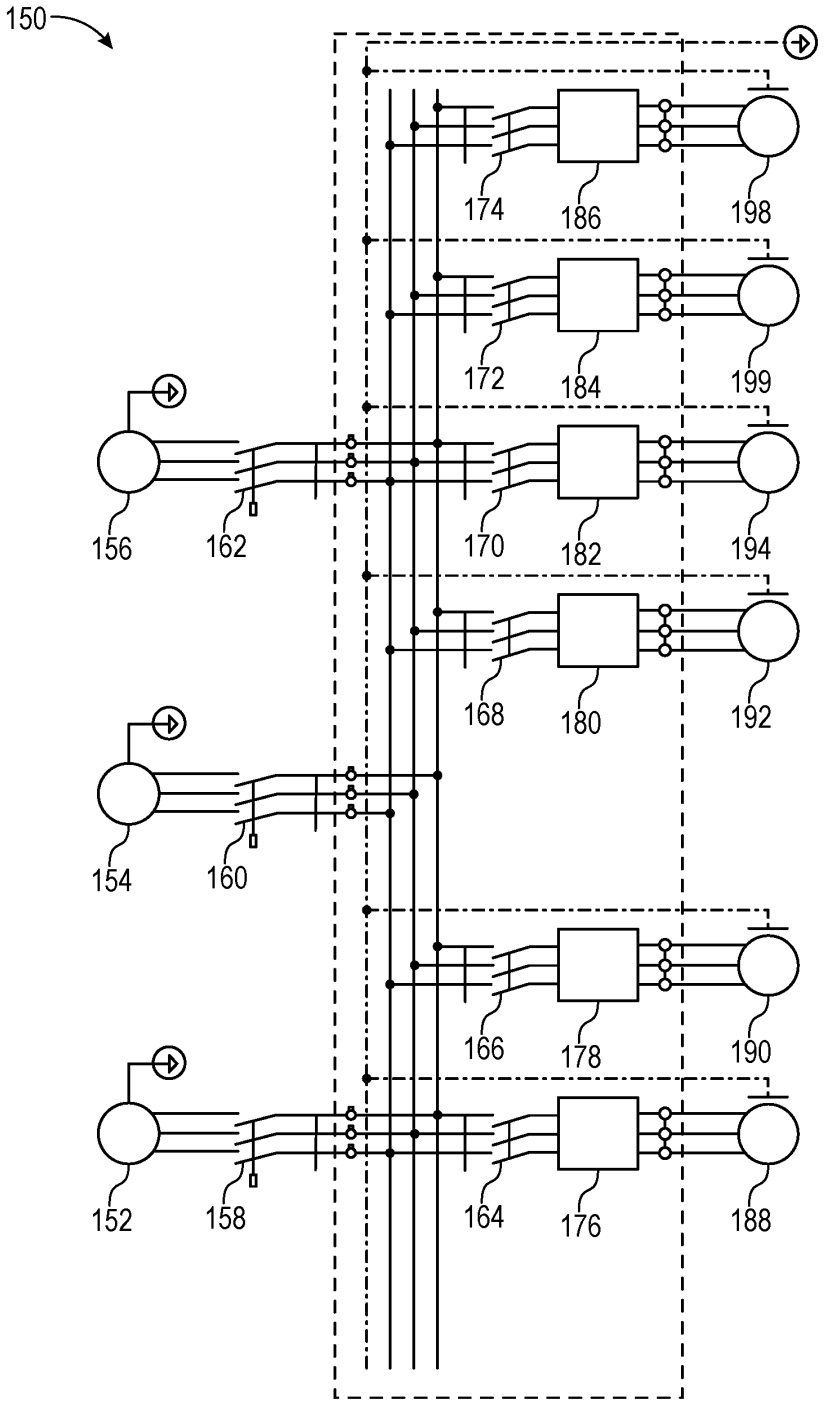
150
174
186
198
172
184
199
156
162
170
182
194
168
180
192
154
160
166
178
190
152
158
164
176
188

FIG. 26

200

Input data for load with 3 x (motors and pinion gear)				
Load mass	m_{load}	720 kg	720 kg	720 kg
Speed of rotation	n_{load}	250 rpm	250 rpm	250 rpm
Acceleration time	ta	60 s	60 s	60 s
Outside diameter of cylinder	D	750 mm	750 mm	750 mm
Inside diameter of cylinder	d	574 mm	574 mm	574 mm
Length of cylinder	L	900 mm	900 mm	900 mm
Friction coeficient	$\mu_{bearings}$	0,01 n/a	0,01 n/a	0,01 n/a
Friction diameter	dμ	676 mm	676 mm	676 mm
Number of motors	No.	3 n/a	3 n/a	3 n/a
Preload		30 %	30 %	30 %
Transmision data for gearing				
Modul	m	5 mm	5 mm	5 mm
Number of teeth driver gear	z1	27 n/a	27 n/a	27 n/a
Number of teeth driven gear	z2	150 n/a	150 n/a	150 n/a
Mass driver gear	mz1	6,29 kg	6,29 kg	6,29 kg
Mass driven gear	mz2	81,89 kg	81,89 kg	81,89 kg
Efficiency coefficient of additional transmision	Eta-z	0,9 n/a	0,9 n/a	0,9 n/a
Max tangential force	Ftmax	40000 N	40000 N	40000 N
Teeth helix angle	β	19,528 deg	19,528 deg	19,528 deg
Motor data		m550-H 71L4	m550-H 90M4 50 Hz	SEW IE3 DRN90M4
Nominal speed	nn	1430 rpm	1465 rpm	1440 rpm
Nominal torque	Mn`	3,67 Nm	7,17 Nm	4,95 Nm
Nominal torque at n1	Mn`	3,67 Nm	7,17 Nm	4,95 Nm
Ramp up torque	M0	6,95 Nm	16,20 Nm	13,37 Nm
Max. torque	Mmax	6,95 Nm	16,20 Nm	15,35 Nm
Motor idle torque	Mtr-m	0 Nm	0 Nm	0 Nm
Motor rotor inertia	Im	0,00139 Kgm^2	0,00538 Kgm^2	0,00262 Kgm^2
Inertia from additional reduction(brake, for example)	Id	0 Kgm^2	0 Kgm^2	0 Kgm^2
Motor elficiency	$\eta_{100\%}$	0,771 n/a	0,75 n/a	0,829 n/a
Motor nominal power	Pm	0,55 kW	1,10 kW	0,75 kW
Motor acceleration power	Pacc	1,04 kW	2,49 kW	2,31 kW

FIG. 27

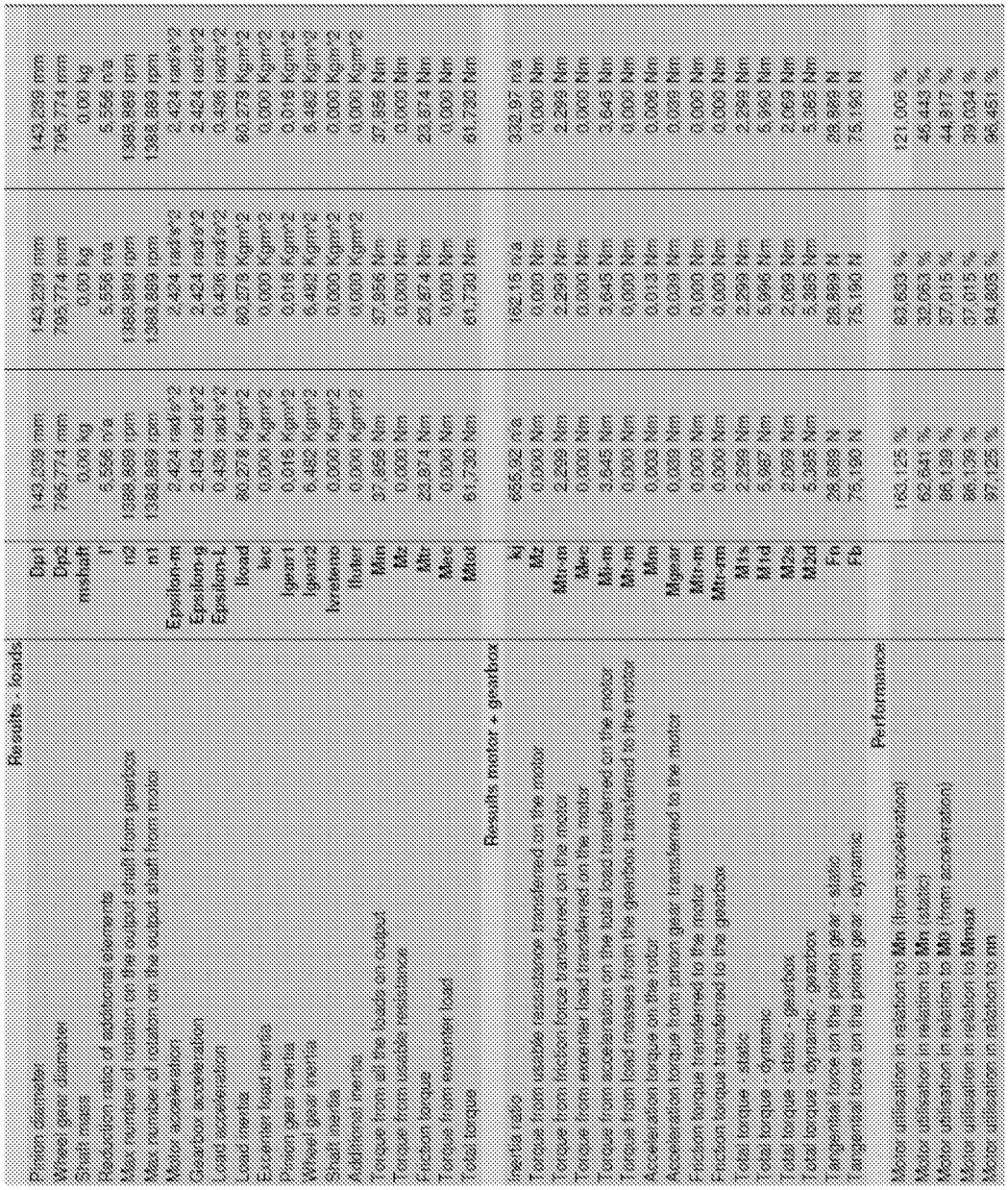

210

Results - loads				
Pinion diameter	Dp1	143,239 mm	143,239 mm	143,239 mm
Wheel gear diameter	Dp2	795,774 mm	795,774 mm	795,774 mm
Shaft mass	mshaft	0,00 kg	0,00 kg	0,00 kg
Reduction ratio of additional elements	I'	5,556 n/a	5,556 n/a	5,556 n/a
Max number of rotaton on the output shaft from gearbox	n2	1388,889 rpm	1388,889 rpm	1388,889 rpm
Max number of rotaton on the output shaft from motor	n1	1388,889 rpm	1388,889 rpm	1388,889 rpm
Motor acceleration	Epsilon-m	2,424 rad/s^2	2,424 rad/s^2	2,424 rad/s^2
Gearbox acceleration	Epsilon-g	2,424 rad/s^2	2,424 rad/s^2	2,424 rad/s^2
Load acceleration	Epsilon-L	0,436 rad/s^2	0,436 rad/s^2	0,436 rad/s^2
Load inertia	Iload	80,278 Kgm^2	80,278 Kgm^2	80,278 Kgm^2
Excenter load inertia	Iec	0,000 Kgm^2	0,000 Kgm^2	0,000 Kgm^2
Pinion gear inertia	Igear1	0,016 Kgm^2	0,016 Kgm^2	0,016 Kgm^2
Wheel gear inertia	Igear2	6,482 Kgm^2	6,482 Kgm^2	6,482 Kgm^2
Shaft inertia	Ivreteno	0,000 Kgm^2	0,000 Kgm^2	0,000 Kgm^2
Additional inertia	Iluter	0,000 Kgm^2	0,000 Kgm^2	0,000 Kgm^2
Torque from all the loads on output	Min	37,856 Nm	37,856 Nm	37,856 Nm
Torque from usable resistance	Mz	0,000 Nm	0,000 Nm	0,000 Nm
Friction torque	Mtr	23,874 Nm	23,874 Nm	23,874 Nm
Torque from excenter load	Mec	0,000 Nm	0,000 Nm	0,000 Nm
Total torque	Mtot	61,730 Nm	61,730 Nm	61,730 Nm
Results motor + gearbox				
Inertia ratio	kj	655,92 n/a	162,15 n/a	332,97 n/a
Torque from usable ressistance transferred on the motor	Mz	0,000 Nm	0,000 Nm	0,000 Nm
Torque from friction force transferred on the motor	Mtr-m	2,299 Nm	2,299 Nm	2,299 Nm
Torque from excenter load transferred on the motor	Mec	0,000 Nm	0,000 Nm	0,000 Nm
Torque from acceleration on the total load transferred on the motor	Mi-m	3,645 Nm	3,645 Nm	3,645 Nm
Torque from load masses from the gearbox transferred to the motor	Mr-m	0,000 Nm	0,000 Nm	0,000 Nm
Acceleration torque on the rotor	Mm	0,003 Nm	0,013 Nm	0,006 Nm
Acceleration torque from pinion gear transferred to the motor	Mgear	0,039 Nm	0,039 Nm	0,039 Nm
Friction torque transferred to the motor	Mtr-m	0,000 Nm	0,000 Nm	0,000 Nm
Friction torque transferred to the gearbox	Mtr-rm	0,000 Nm	0,000 Nm	0,000 Nm
Total torque - static	M1s	2,299 Nm	2,299 Nm	2,299 Nm
Total torque - dynamic	M1d	5,987 Nm	5,996 Nm	5,990 Nm
Total torque - static - gearbox	M2s	2,069 Nm	2,069 Nm	2,069 Nm
Total torque - dynamic - gearbox	M2d	5,385 Nm	5,385 Nm	5,385 Nm
Tangential force on the pinion gear - static	Fn	28,889 N	28,889 N	28,889 N
Tangential force on the pinion gear - dynamic	Fb	75,190 N	75,190 N	75,190 N
Performance				
Motor utilisation in relation to **Mn** (from acceleration)		163,125 %	83,633 %	121,006 %
Motor utilisation in relation to **Mn** (static)		62,641 %	32,063 %	46,443 %
Motor utilisation in relation to **M0** (from acceleration)		86,139 %	37,015 %	44,817 %
Motor utilisation in relation to **Mmax**		86,139 %	37,015 %	39,034 %
Motor utilisation in relation to **nn**		97,125 %	94,805 %	96,451 %

FIG. 28

220

Input data for load with 3 x (motors and pinion gear)					
Load mass	mload	600 kg	600 kg	600 kg	600 kg
Speed of rotation	nload	250 rpm	250 rpm	250 rpm	250 rpm
Acceleration time	ta	60 s	60 s	60 s	60 s
Outside diameter of cylinder	D	750 mm	750 mm	750 mm	750 mm
Inside diameter of cylinder	d	574 mm	574 mm	574 mm	574 mm
Length of cylinder	L	900 mm	900 mm	900 mm	900 mm
Friction coefficient	μ rolling	0,01 n/a	0,01 n/a	0,01 n/a	0,01 n/a
Friction diameter	dμ	676 mm	676 mm	676 mm	676 mm
Number of motors	No.	3 n/a	3 n/a	3 n/a	3 n/a
Preload		30 %	30 %	30 %	30 %
Transmission data for gearing					
Modul	m	5 mm	5 mm		5 mm
Number of teeth driver gear	z1	27 n/a	27 n/a		27 n/a
Number of teeth driven gear	z2	150 n/a	150 n/a		150 n/a
Mass driver gear	mz1	6,29 kg	6,29 kg		6,29 kg
Mass driven gear	mz2	81,89 kg	81,89 kg		81,89 kg
Efficiency coefficient of additional transmission	Eta-z	0,9 n/a	0,9 n/a		0,9 n/a
Max tangential force	Fmax	40000 N	40000 N		40000 N
Teeth helix angle	β	19,528 deg	19,528 deg		19,528 deg
Motor data		m550-H 71L4	m550-H 90LM4 50 Hz		SEW IE3 DRN90M4
Nominal speed	nn	1430 rpm	1465 rpm		1440 rpm
Nominal torque	Mn	3,67 Nm	7,17 Nm		4,95 Nm
Nominal torque at n1	Mn'	3,67 Nm	7,17 Nm		4,95 Nm
Ramp up torque	M0	8,95 Nm	18,20 Nm		13,37 Nm
Max. torque	Mmax	6,95 Nm	16,20 Nm		15,35 Nm
Motor idle torque	Mr-m	0 Nm	0 Nm		0 Nm
Motor rotor inertia	Im	0,001133 Kgm^2	0,00538 Kgm^2		0,00262 Kgm^2
Inertia from additional reduction(brake, for example)	Id	0 Kgm^2	0 Kgm^2		0 Kgm^2
Motor efficiency	ηmot	0,771 n/a	0,75 n/a		0,828 n/a
Motor nominal power	Pm	0,55 kW	1,10 kW		0,75 kW
Motor acceleration power	Pacc	1,04 kW	2,49 kW		2,31 kW

FIG. 29

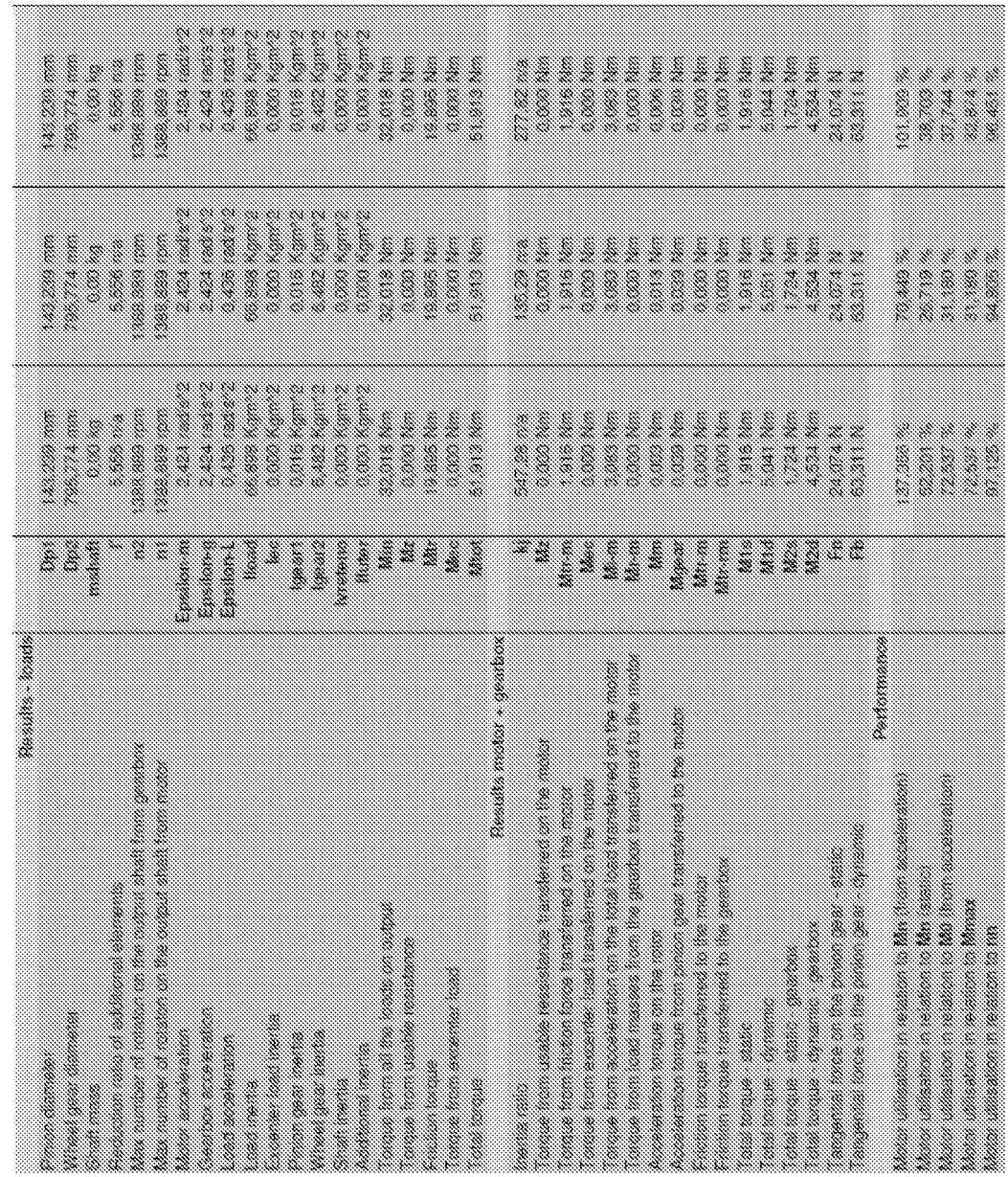
230
Results - Loads
Pinion diameter
Wheel pitch diameter
Shaft mass
Axial location of shaft element
Axial location of the point of shaft from gearbox
Mass moment of inertia on the output shaft from rotor
Mass acceleration
Centre acceleration
Load acceleration
Load mass
External load factor
Pinion pitch circle
Wheel pitch circle
Shaft weight
Axial force
Tangential force on pinion
Tangential force on wheel
Friction force
Tangential force transmitted
Tangential force
Results motor + gearbox
Inertia ratio
Total load acceptable transferred on the motor
Total load acceptable transferred on the motor
Load factor transferred on the motor
Tangential force transferred on the motor
Tangential force acceptable transferred on the motor
Tangential force acceptable transferred on the motor
Axial force acceptable transferred on the motor
Acceleration acceptable transferred on the motor
Acceleration acceptable transferred on the motor
Friction force transferred to the motor
Friction force transferred to the motor
Friction force acceptable
Total mass acceptable
Total load acceptable
Total load acceptable
Tangential force acceptable on the motor - static
Tangential force acceptable on the motor - dynamic
Performance
Mass reduction in relation to Mass
Mass reduction in relation to Mass
Mass reduction in relation to Mass
Mass reduction in relation to Mass
Mass reduction in relation to Mass
Dp1
Dp2
mshaft
r
n2
n1
Epsilon_m
Epsilon_g
Epsilon_t
load
ks
type1
type2
lengths
Nuber
Mm
Mc
Mr
Mc1
Mm1
Ks
Kc
Mm
Mgear
Mr_m
Mr_m
Mt1
Mt1
M2d
M2d
Fn
Fb
Ks
Mc
Mr_m
Mc1
Mr_m
Mm
Mgear
Mr_m
Mr_m
Mt1
Mt1
M2d
M2d
Fn
Fb
Mr_m
Mr
Mm
Mc
Mc1
Mm1
Ks
K

Application No. 18/438,424
REPLACEMENT SHEET

17/32

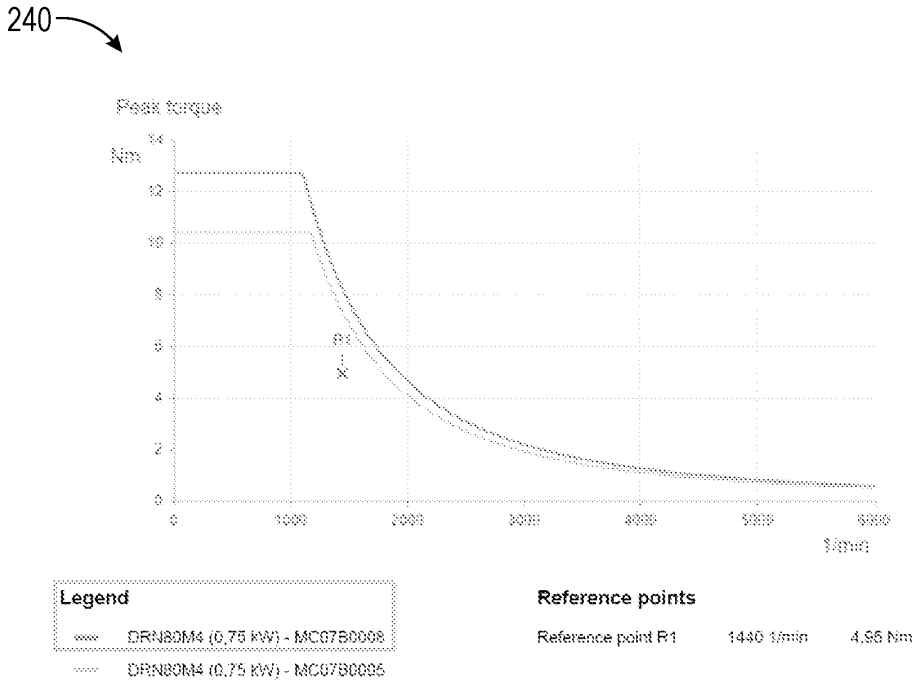

FIG. 31

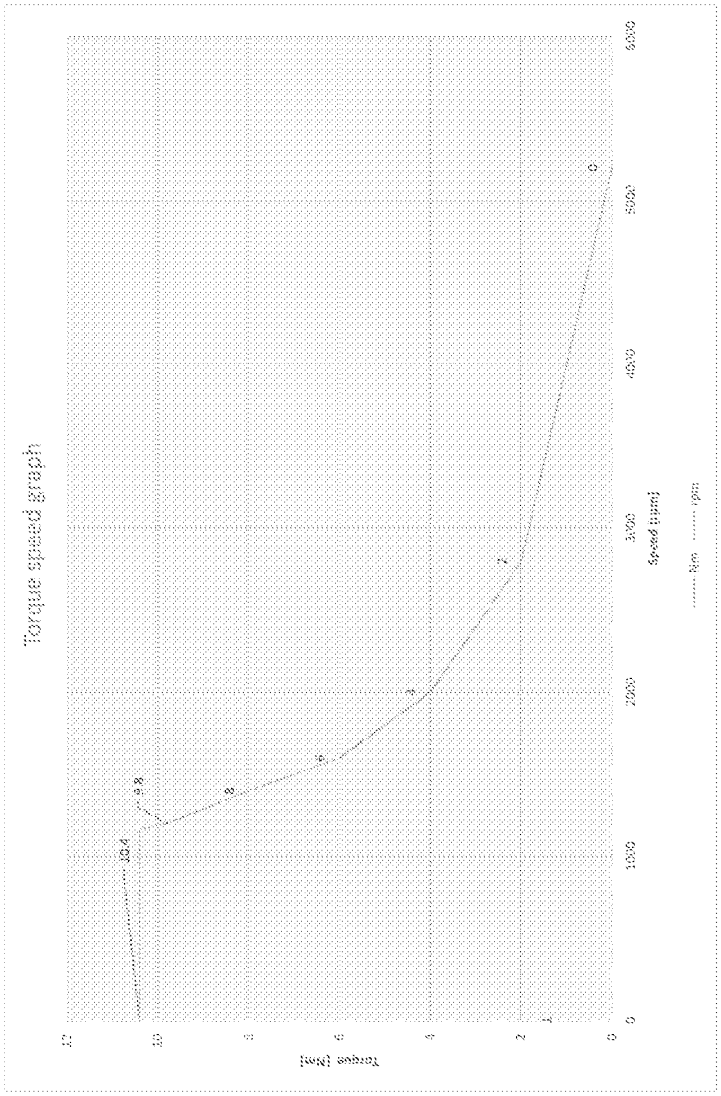

250

rpm	Nm
0	10.4
500	10.4
1000	10.4
1167	10.4
1200	9.8
1400	8
1600	6
2000	4
2800	2
5200	0

Motor	DRN80M4
Number of poles	4
Nominal frequency	50 Hz
Rated voltage	400 V
Cooling	Fan cooled
Pn	0,75 [kW]
Mn	4,95[Nm]
nn	1440[rpm]
In	1,75 [A]
cos phi	0.74
Mmax	16,83[Nm]
Ma	10,4[Nm]

Inverter	MOVITRAC B - MC07B005
Supply voltage	3x400 V AC
PWM frequency	4 kHz
Control mode	VFC

FIG. 32

260

Input data:

Spur Gear, Gear Rack

Calculation method		Spur gear	
Calculation variants		Standard gauge spur gears	
Calculation standard		DIN 3990	
Geometry calculation incl. measurement ?		no	
Calculation of deviations ?		yes	
Type of toothing		External toothing	
Spur gear geometry			
Basic data			
Normal modulus		m_n = 5	mm
Helical angle		β : 19,528	°
Centre distance		a : 0	mm
Driving element		Pinion	
Input of geometry		z1, z2	
Number of teeth (pinion)		z_1 = 27	
Number of teeth (wheel)		z_2 = 150	
Translation ratio		i = 5,556	
	Pinion	**Wheel**	
Tooth width	b = 50	50	mm
Input method for tooth-tip height modification		No input	
Tip edge modification		No	
Addendum modification according to DIN 3992/3993			
Input methode profile shift coefficients		Sum of profile shift coefficient	
Sum of profile shift coefficient		x_Σ = 0	
Basic gear rack	**Pinion**	**Wheel**	
Tip clearance factor	c_p^* = 0,25	0,25	
Root fillet radius factor	ρ_{fp}^* : 0,25	0,25	
Pressure angle		α_n = 20	°
Tooth-tip thickness factor		s_{an}^* = 0,2	

FIG. 33

270

Results:

General data

Effective number of teeth ratio	u	=	5,556	
Effective translation ratio	i	=	5,556	
Transverse pressure angle	α_t	=	21,116	°
Pressure angle at pitch cylinder	α_{wt}	=	21,116	°
Ground lead	β_b	=	18,207	°
Zero centre distance	a_d	=	469,507	mm

FIG. 34

280

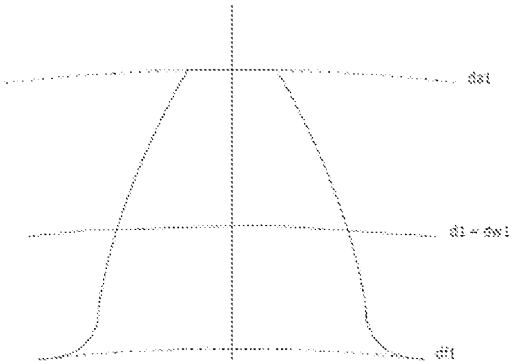

FIG. 35

290

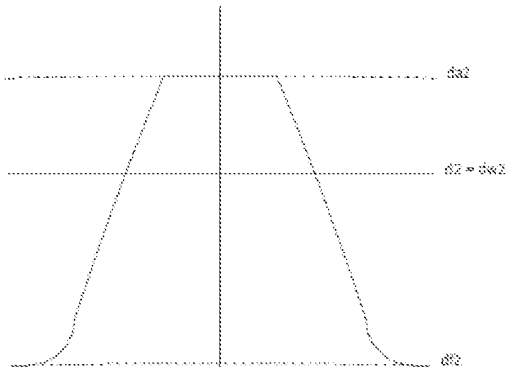

FIG. 36

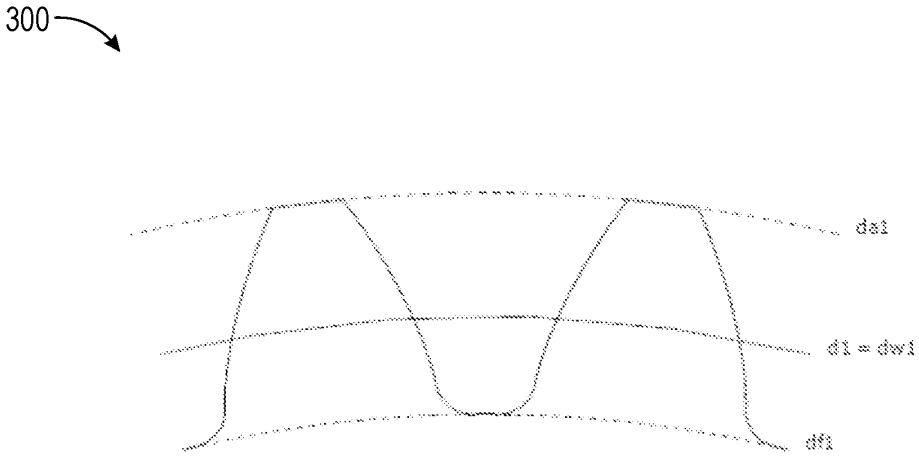

FIG. 37

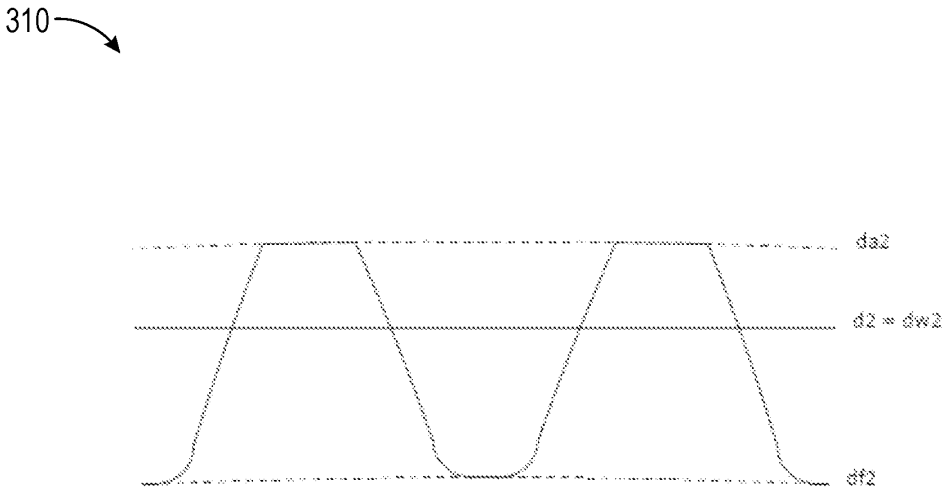

FIG. 38

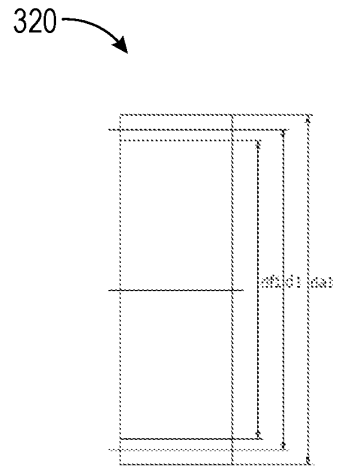

FIG. 39

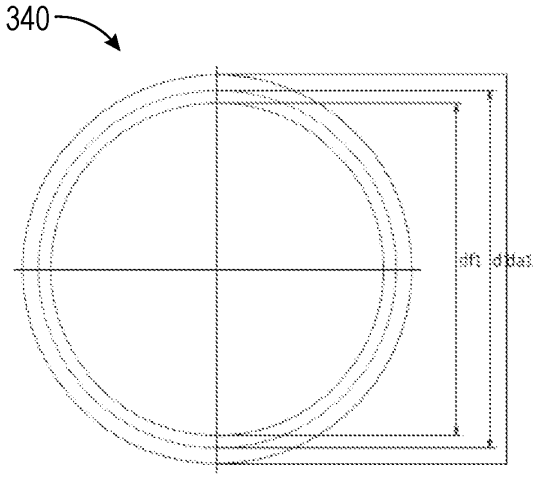

FIG. 40

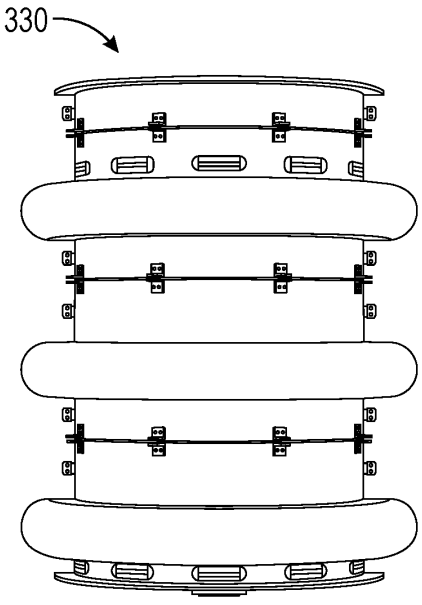

FIG. 41

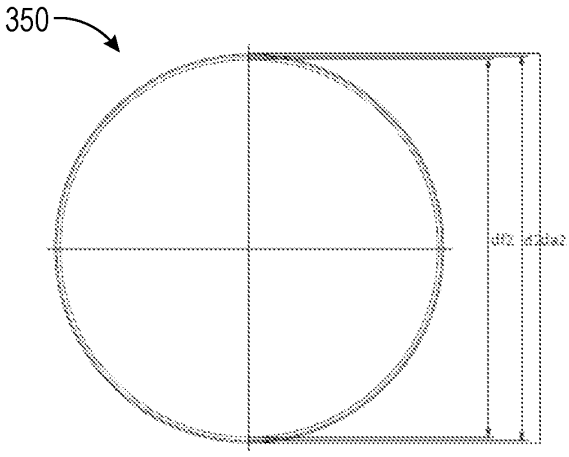

FIG. 42

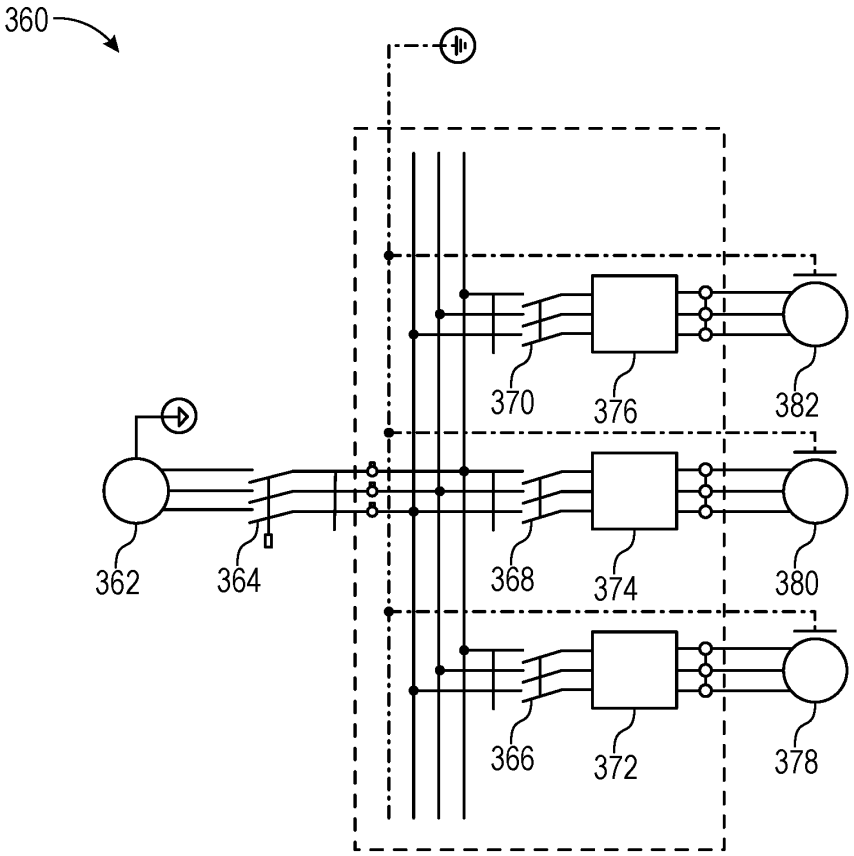

FIG. 43

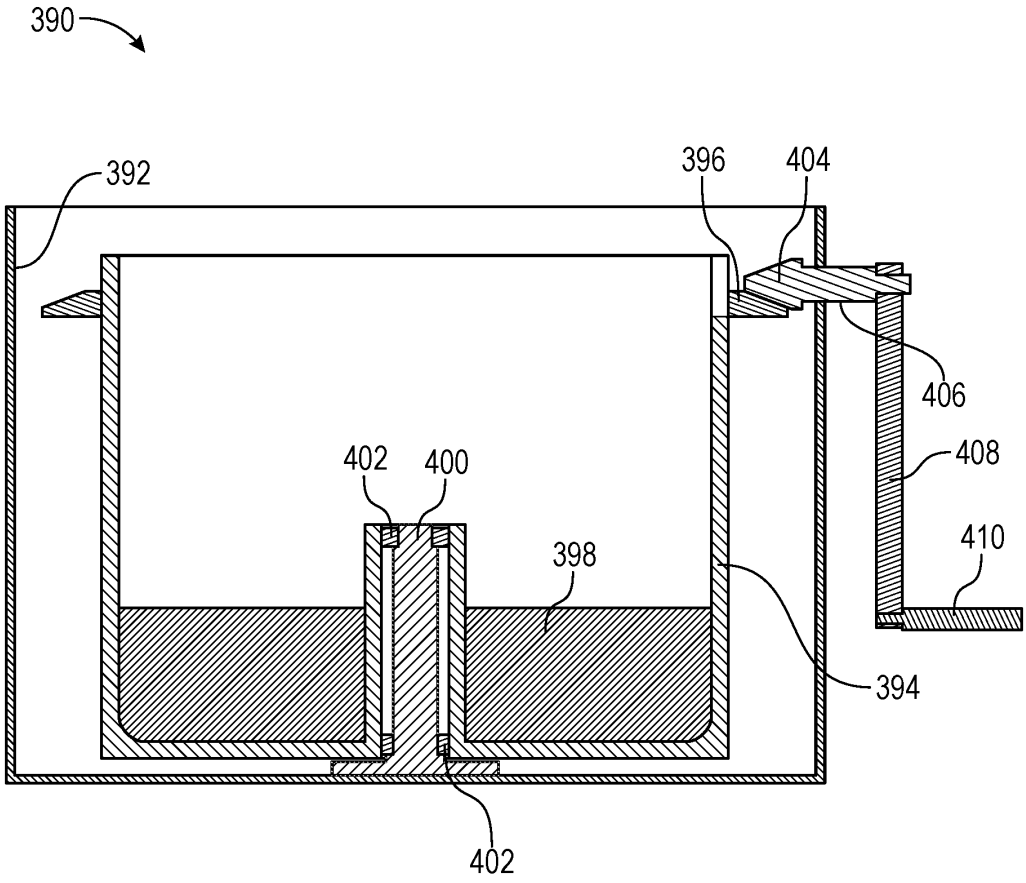

FIG. 44

420

Load			
Moment of inertia around Z axis	Ix	3.00218	[kgm2]
Mass of the mixing material	m	150	[kg]
Max rotational required speed	n	150	[rpm]
Max rotational required speed in seconds	ns	2.5	[rps]
Angular speed	ω	15.71	[rad/s]
Initial angular speed	ω0	0.00	[rad/s]
Diameter of the rotational cylinder	d	375	[mm]
Calculation			
Required speed of rotation	v	2.945	[m/s]
Acceleration time	ta	5	[s]
Initial acceleration time	t0	0	[s]
Angular acceleration	α	3.1416	[rad/s2]
Required maximum torque	T	9.43163	[Nm]
Human hand maximum force	F_{human}	200	[N]
Lever handle to centre distance	L	0.2	[m]
Maximum torque by hand	Th	40	[Nm]
Maximum rotational speed by human hand	n_{human}	2	[rps]
Maximum rotational speed by human hand	n_{human}	120	[rpm]
Number of teeth of driver	z1	9	
Number of teeth of driven	z2	7	
Transmision ratio	i	1.286	
Torque at driven gear - created by hand	Tdg	21.78	[Nm]
Rotational speed at driven gear	ndg	2.571	[rps]
Rotational speed at driven gear	ndg	154.29	[rpm]

FIG. 45

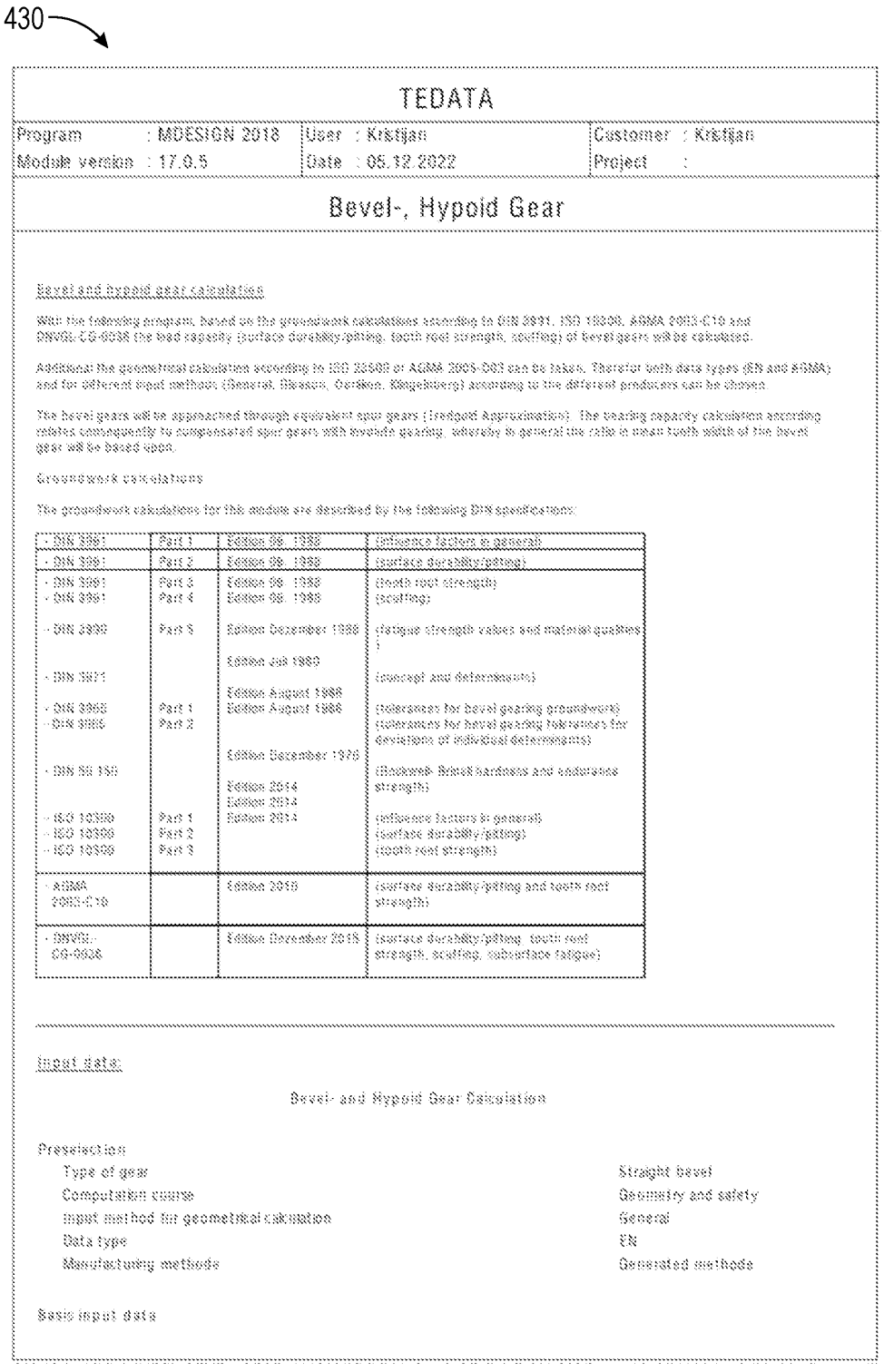
430
TEDATA
Program : MDESIGN 2018
Module version : 17.0.5
User : Kristjan
Date : 05.12.2022
Customer : Kristjan
Project :
Bevel-, Hypoid Gear
Bevel and hypoid gear calculation
With the following program, based on the groundwork calculations according to DIN 3991, ISO 10300, AGMA 2003-C10 and DNVGL-CG-0038 the load capacity (surface durability/pitting, tooth root strength, scuffing) of bevel gears will be calculated.
Additional the geometrical calculation according to ISO 23509 or AGMA 2005-D03 can be taken. Therefor both data types (EN and AGMA) and for different input methods (General, Klingelnberg, Gleason, Klingelnberg) according to the different producers can be chosen.
The bevel gears will be approached through equivalent spur gears (Tredgold Approximation). The bearing capacity calculation according relates consequently to compensated spur gears with involute gearing, whereby in general the ratio is mean tooth width of the bevel gear will be based upon.
Groundwork calculations
The groundwork calculations for this module are described by the following DIN specifications:
· DIN 3991 Part 1 Edition 08. 1988 (influence factors in general)
· DIN 3991 Part 2 Edition 08. 1988 (surface durability/pitting)
· DIN 3991 Part 3 Edition 08. 1988 (tooth root strength)
· DIN 3991 Part 4 Edition 08. 1988 (scuffing)
· DIN 3990 Part 5 Edition December 1999 (fatigue strength values and material qualities)
Edition July 1989
· DIN 3971 (concept and determinants)
Edition August 1988
· DIN 3962 Part 1 Edition August 1988 (tolerances for bevel gearing groundwork)
· DIN 3965 Part 2 (tolerances for bevel gearing tolerances for deviations of individual determinants)
Edition December 1976
· DIN 50 150 (Rockwell- Brinell hardness and valuerance strength)
Edition 2014
Edition 2014
· ISO 10300 Part 1 Edition 2014 (influence factors in general)
· ISO 10300 Part 2 (surface durability/pitting)
· ISO 10300 Part 3 (tooth root strength)
· AGMA 2003-C10 Edition 2010 (surface durability/pitting and tooth root strength)
· DNVGL-CG-0038 Edition December 2015 (surface durability/pitting, tooth root strength, scuffing, subsurface fatigue)
Input data
Bevel- and Hypoid Gear Calculation
Preselection
Type of gear Straight bevel
Computation course Geometry and safety
Input method for geometrical calculation General
Data type EN
Manufacturing methods Generated methods
Basic input data

FIG. 46

440

TEDATA

Program : MDESIGN 2016	User : Kristijan	Customer : Kristijan
Module version : 17.0.6	Date : 05.12.2022	Project :

Bevel-, Hypoid Gear

Base of calculation		ISO 22509	
Hypoid offset	a	E = 0	mm
Shaft angle		Σ = 90	°
Number of teeth (pinion)	z_1	7	
Number of teeth (wheel)	z_2	9	
Face width	b_2	F = 20	mm
Outer pitch diameter (wheel)	d_{e2}	D = 60	mm
Mean spiral angle (wheel)	β_{m2}	γ_G : 0	°

Additional input data

Define backlash		jen	
Outer normal backlash		j_{en} : 0.05	mm
Nominal design pressure angle on coast side		α_{nCc} = 25	°
Nominal design pressure angle on drive side		α_{nDr} = 25	°
Choice for addendum and dedendum angle		Calculation	
Depthwise taper		Standard	
Profile shift coefficient		x_{hm1} = 0	
Basic crown gear addendum factor		k_{hap} = 1	
Basic crown gear dedendum factor		k_{hfp} = 1.25	
Thickness modification coefficient (theoretical)		x_{smn} = 0.01	

Input data for bearing test

Calculation base		DIN 3991	
Operating		Push operating	
Performance		P : 0.1482	kW
Torque	T_1	T_p : 9.43163	N*m
Velocity	n_1	n_p = 150	1/min
Application factor	K_A	K_A = 1.1	

	Pinion	Wheel	
Quality class of gearing	6	6	
Averaged roughness (tooth flank)	R_{z1} = 20	20	µm
Averaged roughness (tooth root)	R_{z2} = 20	20	µm

Driving element		Pinion	
Flank modification		Crowning	
Force range FZG-test		11	
Mounting factor		K_{Hbe} : 1	
Face load factor contact stress	K_{Hb}	K_{Hb} : 0	
Face load factor bending stress	K_{Fb}	K_{Fb} : 0	
Transverse load factor contact stress		K_{Ha} : 0	
Transverse load factor bending stress		K_{Fa} : 0	

FIG. 47

450

TEDATA

Program : MDESIGN 2018	User : Kristijan	Customer : Kristijan
Module version : 17.0.5	Date : 05.12.2022	Project :

Bevel-, Hypoid Gear

$x_{...}, y_{...} = 85$ %

Input data

Pinion-Material (strength values) according to	MDESIGN database	
Material designation	16NiCr4	
Material number	1.5714	
Material group	Casehardening steel	
Austenite content for casehardening steel	20-30%	
Standard dimension	dNp = 16	mm
Yield point for dNp	RpN = 695	MPa
Nominal stress number (bending)	s_{Flim} = 425	MPa
Allowable stress number of contact stress	s_{Hlim} = 1500	MPa
Modulus of elasticity	E = 210000	MPa
Poisson's ratio	n = 0,3	
Density	r = 7850	kg/m³

Wheel-Material (strength values) according to	MDESIGN database	
Material designation	16NiCr4	
Material number	1.5714	
Material group	Casehardening steel	
Austenite content for casehardening steel	20-30%	
Standard dimension	dNp = 16	mm
Yield point for dNp	RpN = 695	MPa
Nominal stress number (bending)	s_{Flim} = 425	MPa
Allowable stress number of contact stress	s_{Hlim} = 1500	MPa
Modulus of elasticity	E = 210000	MPa
Poisson's ratio	n = 0,3	
Density	r = 7850	kg/m³

Lubrication demand

Basic oil temperature	q_{oil} = 24	°C
Density oil (15°C)	r_{oil} = 877	kg/m³
Lubrication	Splash lubrication	

Additional cutter data

Residual fillet undercut	no	no	
Protuberance on cutter		p_t = 0,22	mm
Grinding allowance		q = 0,14	mm

		Pinion	Wheel
Cutter edge radius	r_{APR} = 0,38	0,38	

Minimal safety

Safety factor for contact stress	S_{Hmin} = 1,1

FIG. 48

460

TEDATA

Program : MDESIGN 2018	User : Kristijan	Customer : Kristijan
Module version : 17.0.5	Date : 05.12.2022	Project :

Bevel-, Hypoid Gear

Safty factor for bending stress: $S_{F\,min} = 1,2$
Safety factor for pitting: $S_{Hmin} = 1,3$

Results:

Basic gearing input data

Number of teeth (pinion)	z_1	=	7		
Number of teeth (wheel)	z_2	=	9		
Gear ratio	u	=	1,29		
Hypoid offset	a	=	0	mm	
Cutter radius	r_{c0}	=	0	mm	

Pitch cone parameters

Shaft angle	Σ	=	90	°	
Face width factor	c_{be2}	=	0,5		

			Pinion	Wheel
Pitch angle	δ	=	52,13	°
Mean spiral angle	β_m	=	0	°
Mean cone distance	R_m	=	28,01	mm

Supplementary data

Nominal design pressure angle (on drive side)	α_{D0}	=	25	°	
Nominal design pressure angle (on coast side)	α_{C0}	=	25	°	
Influence factor of limit pressure angle	f_{alim}	=	0		
Profile shift coefficient	x_{hm1}	=	0		
Basic crown gear addendum factor	k_{ha0}	=	1		
Basic crown gear dedendum factor	k_{fa0}	=	1,25		
Thickness modification coefficient (theoretical)	x_{sm1}	=	0,01		

Basic data

Mean normal module	m_{mn}	=	4,91	mm	
Outer transverse module	m_{et}	=	6,87	mm	
Mean normal pressure angle	α_n	=	25	°	
Clearance	c	=	1,23	mm	

Geometry

Cone distances

				Pinion	Wheel
Inner pitch cone distance	R_i	=	18,01	18,01	mm
Outer pitch cone distance	R_e	=	38,01	38,01	mm

Diameters

	Pinion	Wheel

FIG. 49

470

TEDATA

Program : MDESIGN 2018	User : Kretijan	Customer : Kretijan
Module version : 17.0.6	Date : 06.12.2022	Project :

Bevel-, Hypoid Gear

Inner pitch diameter	d_i	=	22,11	28,43	mm
Mean pitch diameter	d_m	=	34,39	44,21	mm
Outer pitch diameter	d_e	=	46,67	60	mm
Inner diameter	d_{fi}	=	26,4	31,77	mm
Outside diameter	d_{ae}	=	57,88	68,72	mm
Inner root cone diameter	d_{ri}	=	15,88	23,58	mm
Outer root cone diameter	d_{re}	=	33,51	48,77	mm
Mean normal diameter	d_{mn}	=	45,86	72,82	mm

Tooth depths

				Pinion	Wheel	
Inner whole depth	h_i	=	8,67	8,67	mm	
Outer whole depth	h_e	=	15,44	15,44	mm	
Inner addendum	h_{ai}	=	2,72	2,72	mm	
Mean addendum	h_{am}	=	4,91	4,91	mm	
Outer addendum	h_{ae}	=	7,11	7,11	mm	
Inner dedendum	h_{fi}	=	5,95	5,95	mm	
Mean dedendum	h_{fm}	=	6,14	6,14	mm	
Outer dedendum	h_{fe}	=	8,33	8,33	mm	
Mean chordal addendum	h_{amc}	=	5,19	5,04	mm	
Mean whole depth	h_m	=		11,05	mm	
Mean working depth	h_{mw}	=		9,83	mm	

Face widths

				Pinion	Wheel
Face width	b	=	20	20	mm
Face width from calculation point to outside	b_e	=	10	10	mm
Face width from calculation point to inside	b_i	=	10	10	mm

Tooth thicknesses

				Pinion	Wheel	
Thickness modification coefficient	x_{hm}	=	0,008	-0,813		
Mean normal circular tooth thickness	s_{mn}	=	7,795	7,588	mm	
Mean transverse circular thickness	s_{mt}	=	7,795	7,588	mm	
Mean normal chordal tooth thickness	s_{mnc}	=	7,753	7,584	mm	

Angles

				Pinion	Wheel	
Face angle	δ_a	=	50,24	84,49	°	
Root angle	δ_f	=	25,51	39,76	°	
Addendum angle	θ_a	=	12,37	12,37	°	
Dedendum angle	θ_f	=	12,37	12,37	°	

	Pinion	Wheel
Undercut check:	ooooooo!!!!	ooooooo!!!!

Rating test results:

FIG. 50

480

TEDATA

Program : MDESIGN 2018	User : Kristjan	Customer : Kristjan
Module version : 17.0.5	Date : 05.12.2022	Project :

Bevel-, Hypoid Gear

Force and torque						
Torque rating	T_1	○		9,43	N*m	
Circumference at the pitch cone	F_{mt}	×		548,84	N	
Axial force	F_{ax}	○	157,84	261,91	N	
Radial force	F_{rad}	×	261,91	157,84	N	
Number of load cycles	N_L	○	0	0		
Influencing factors						
Dynamic factor	K_v	×		1		
Face load factor for contact stress	$K_{H\beta}$	○		1,5		
Face load factor for bending stress	$K_{F\beta}$	×		1,5		
Transverse load factor for contact stress	$K_{H\alpha}$	○		1,11		
Transverse load factor for bending stress	$K_{F\alpha}$	×		1,11		
Surface durability (pitting)						
Bevel gear factor (flank)	Z_K	○		0,86		
Zone factor	Z_H	×		2,29		
Elasticity factor	Z_E	○		191,65		
Overlapping factor (flank pressure)	Z_ε	×		0,95		
Helical factor (flank pressure)	Z_β	○		1		
Lubricant factor	Z_L	×		0,91		
Roughness factor	Z_R	×		0,95		
Speed factor	Z_v	○		0,94		
Individual meshing factor (pinion)	Z_B	×		1,31		
Individual meshing factor (wheel)	Z_D	○		0,98		
				Pinion	Wheel	
Size factor	Z_X	○	1	1		
Contact stress	σ_H	×	770,93	673,98	N/mm²	
Boundary contact stress	σ_{HG}	○	1089,58	1088,68	N/mm²	
Permissible contact stress	σ_{HP}	×	990,61	966,61	N/mm²	
Safety factor for contact stress	S_H	○	1,41	1,9		
Tooth root strength						
Overlapping factor (root stress)	Y_ε	×		0,83		
Helical factor (root stress)	Y_β	○		1		
				Pinion	Wheel	
Tooth form factor	Y_{FS}	○	3,02	3,12		
Stress correction factor	Y_{Sa}	×	1,48	1,5		
Size factor	Y_X	○	1	1		
Relative surface factor	$Y_{\delta relT}$	×	0,99	0,99		
Relative support coefficient	Y_{relT}	○	0,93	0,94		
Tooth root stress	σ_F	×	44,55	46,87	N/mm²	
Boundary tooth root stress	σ_{FG}	×	786,66	788,64	N/mm²	
Permissible tooth root stress	σ_{FP}	○	655,57	658,03	N/mm²	
Safety factor for bending stress	S_F	×	17,66	16,92		
Scuffing load capacity						

FIG. 51

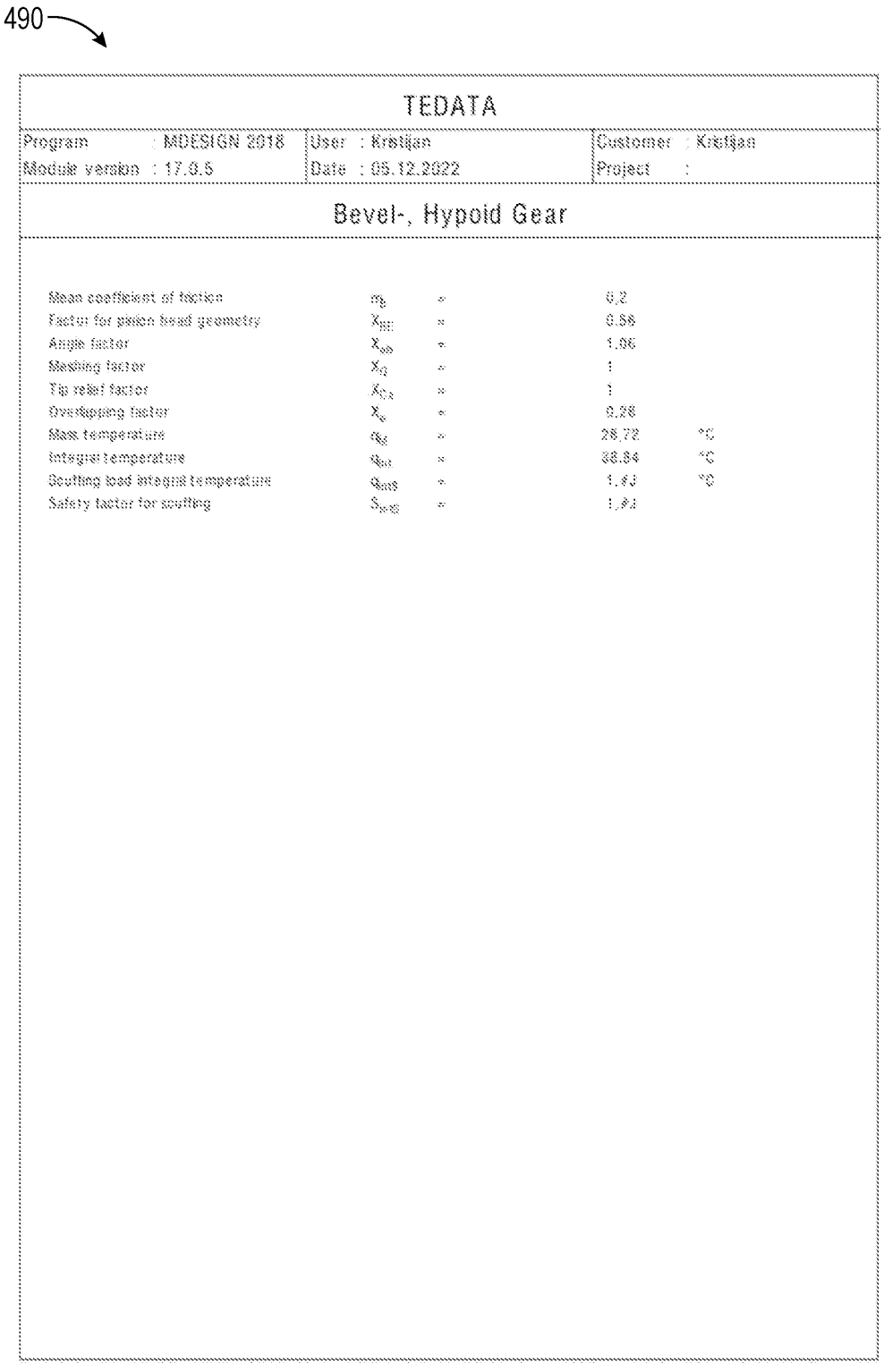
490
TEDATA
Program : MDESIGN 2018
User : Kristjan
Customer : Kristjan
Module version : 17.0.5
Date : 05.12.2022
Project :
Bevel-, Hypoid Gear
Mean coefficient of friction = 0,2
Factor for pinion head geometry = 0,56
Angle factor = 1,06
Meshing factor = 1
Tip relief factor = 1
Overlapping factor = 0,58
Mass temperature = 26,72 °C
Integral temperature = 68,84 °C
Scuffing load integral temperature = 1,43 °C
Safety factor for scuffing = 1,43

FIG. 52

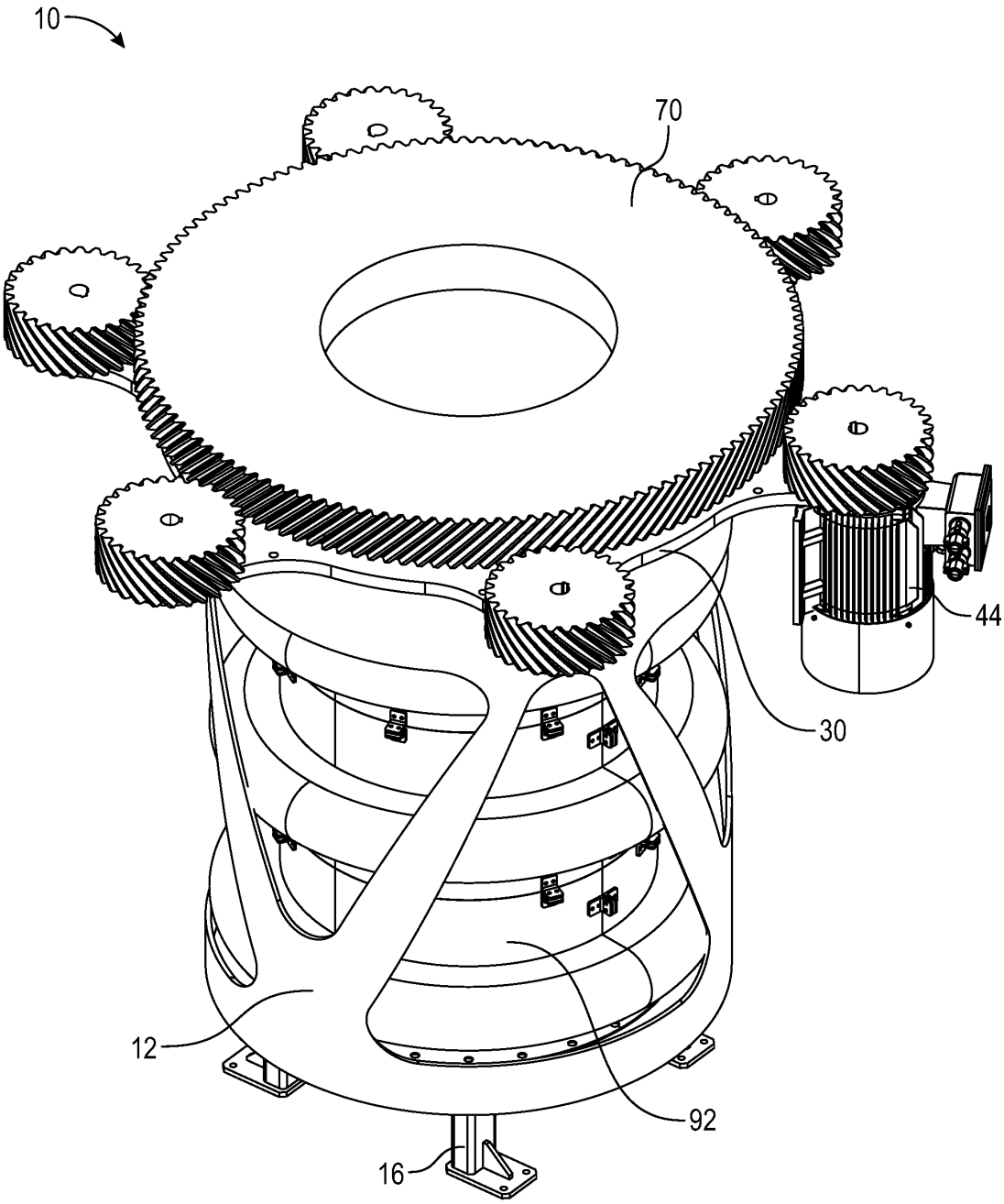

FIG. 1A

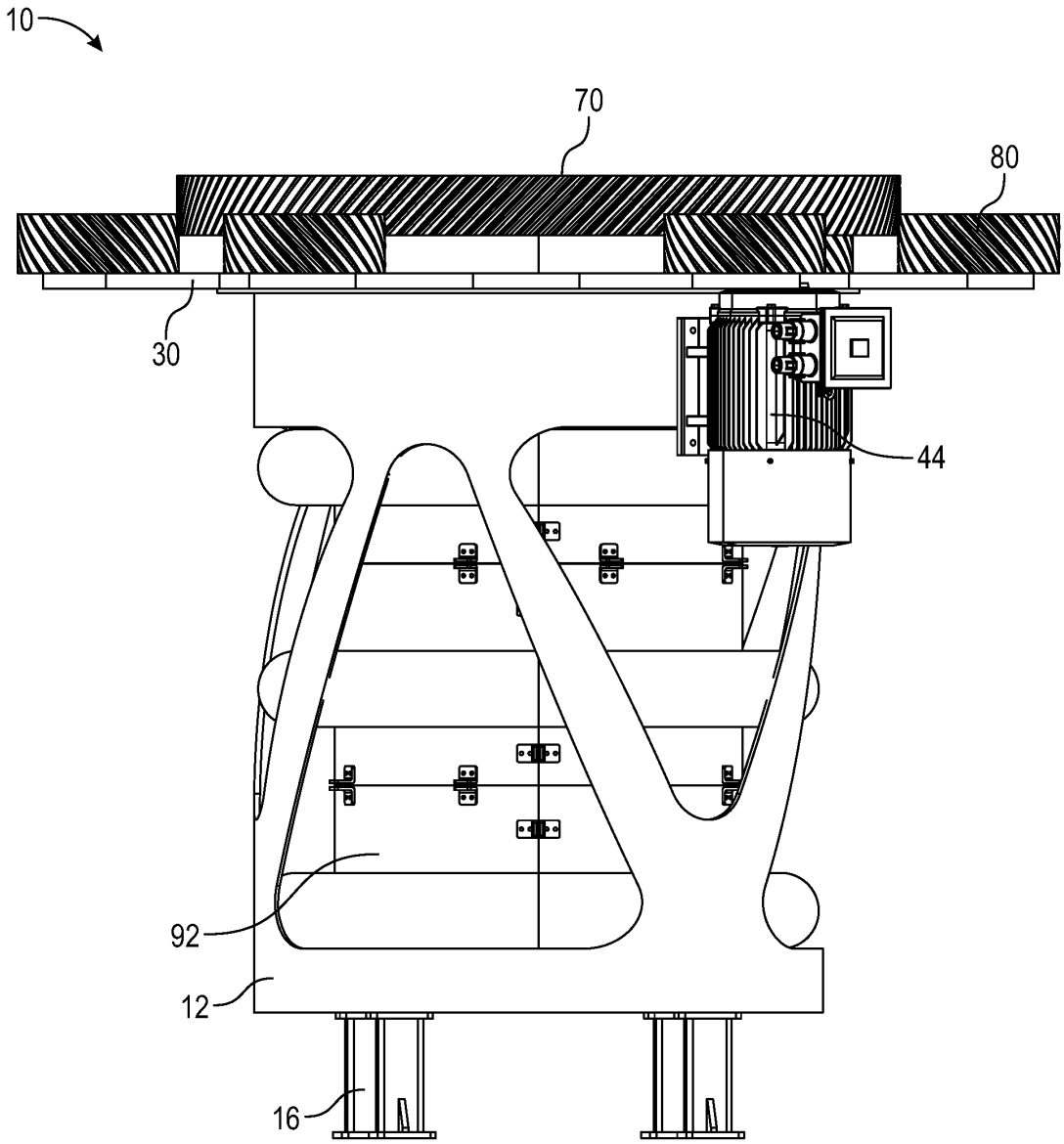

FIG. 1B

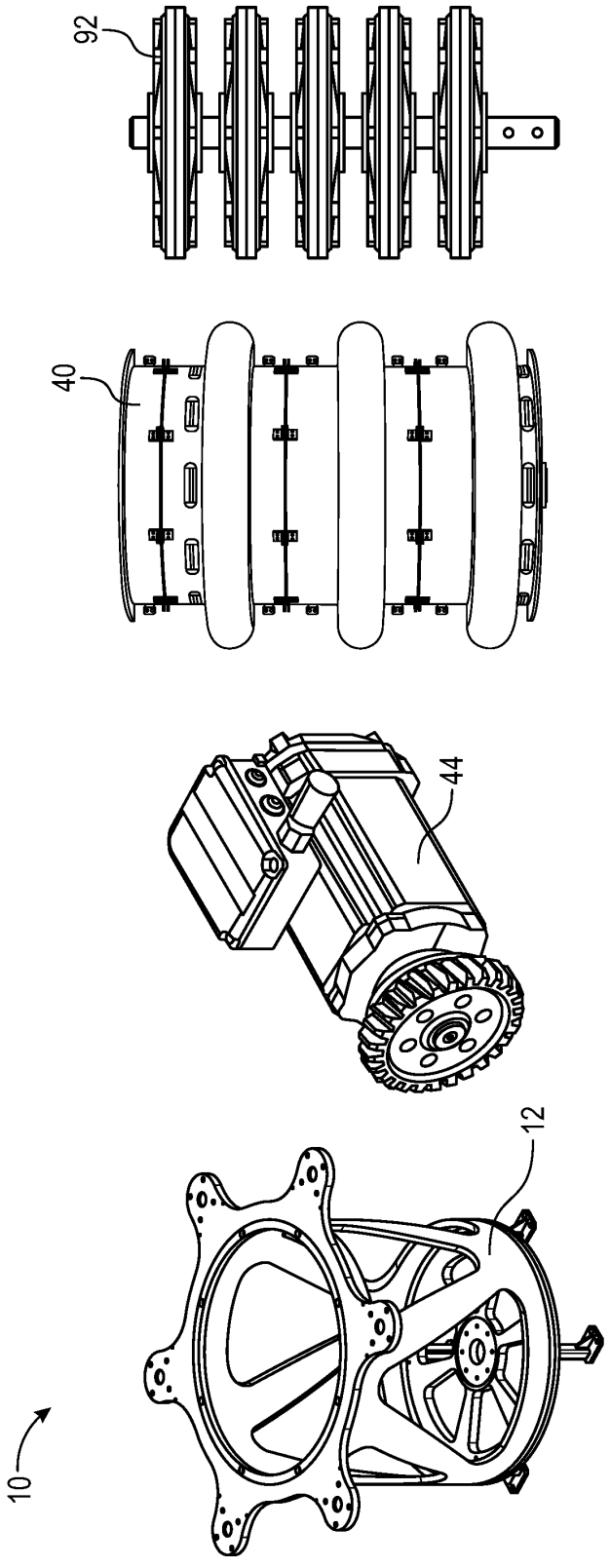

FIG. 2

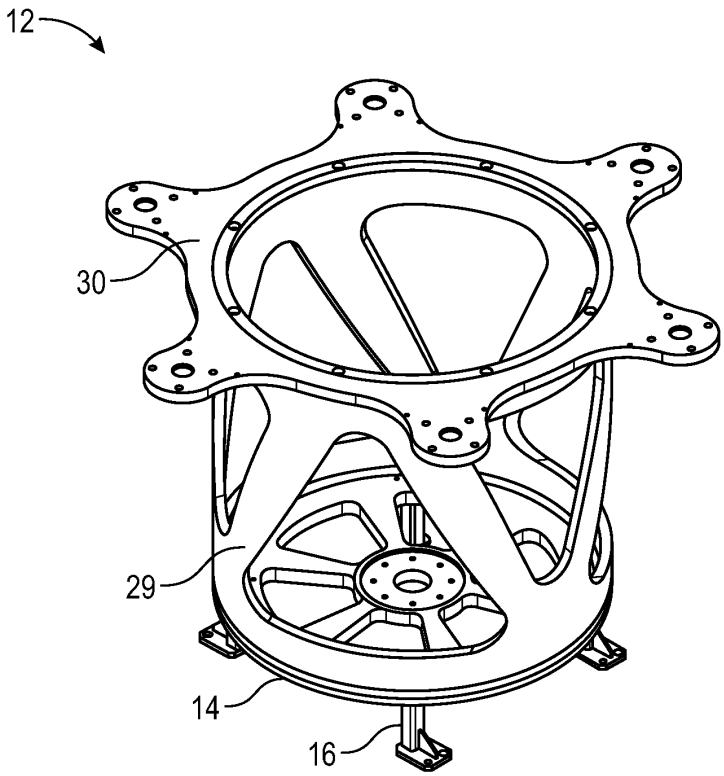

FIG. 3

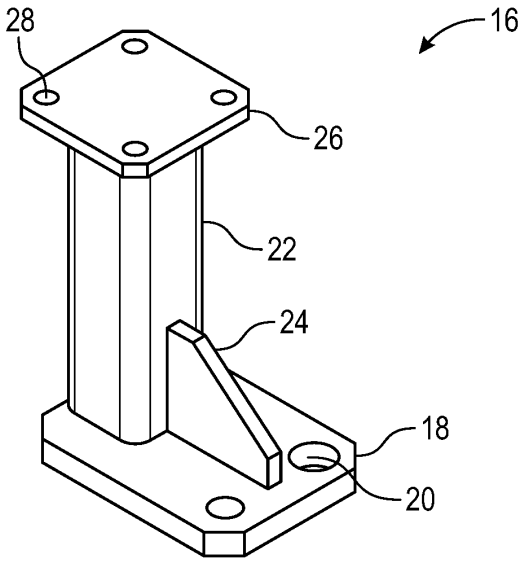

FIG. 4

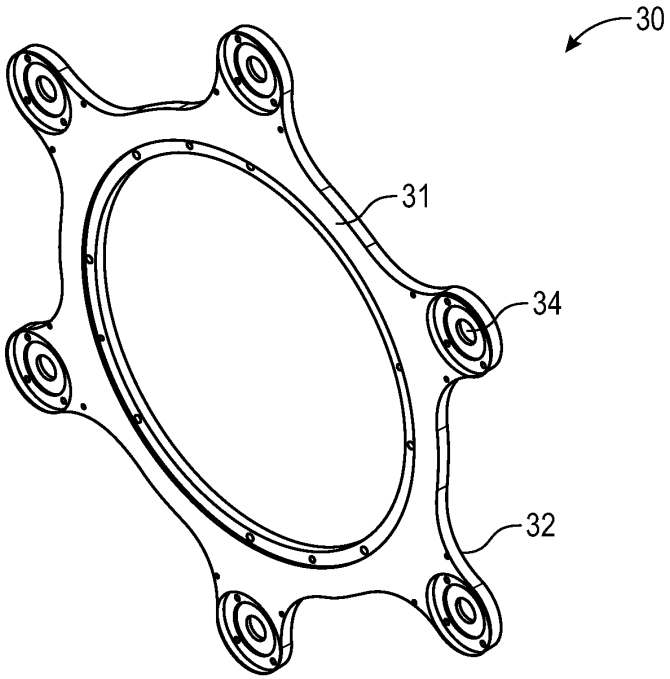

FIG. 5

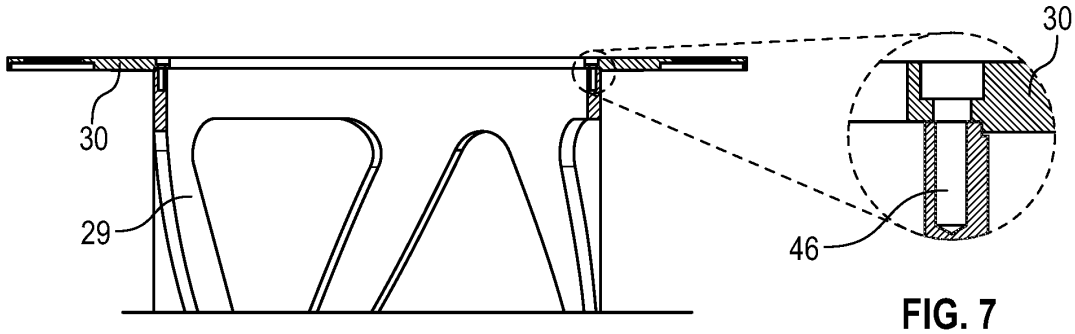

FIG. 7

FIG. 6

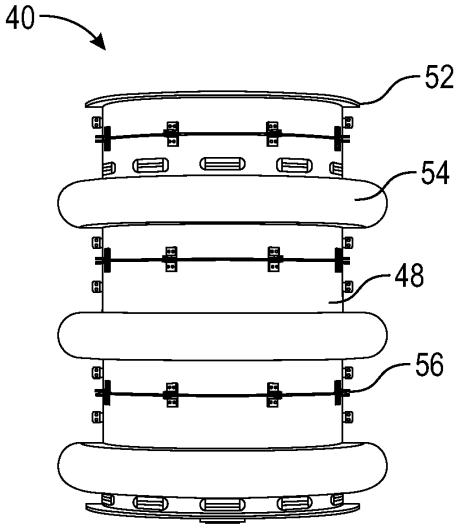

FIG. 8

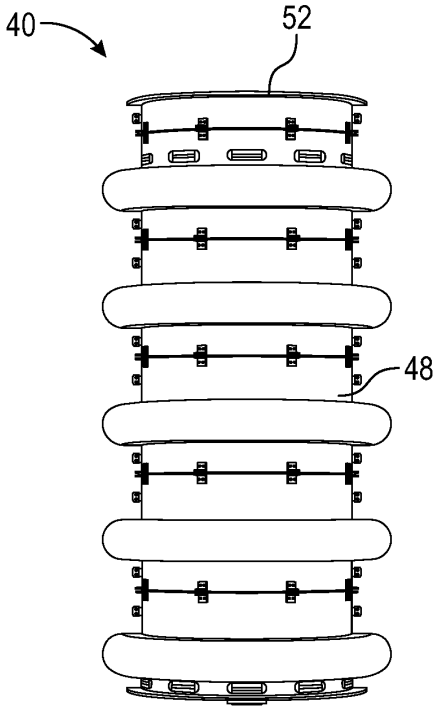

FIG. 9

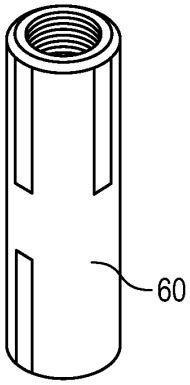

FIG. 10

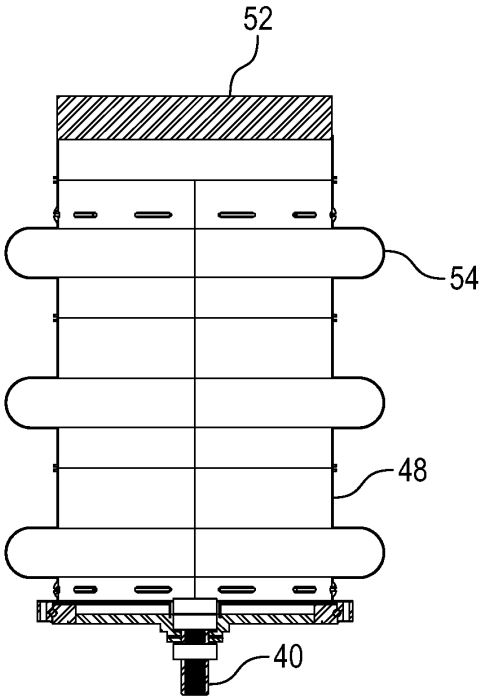

FIG. 11

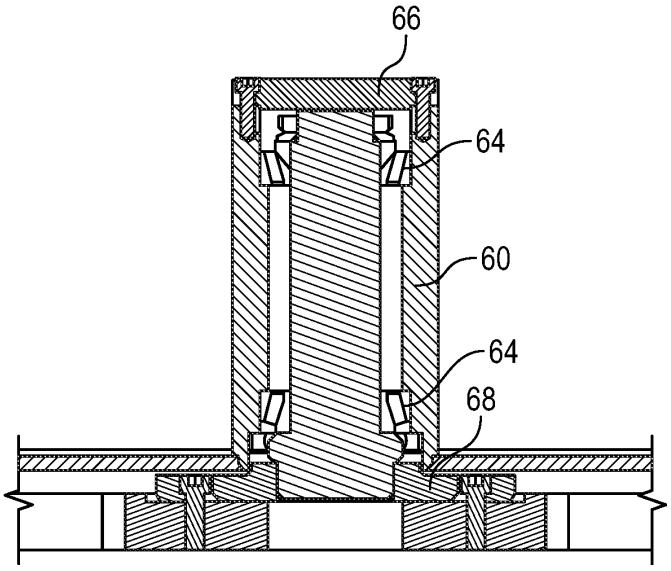

FIG. 12

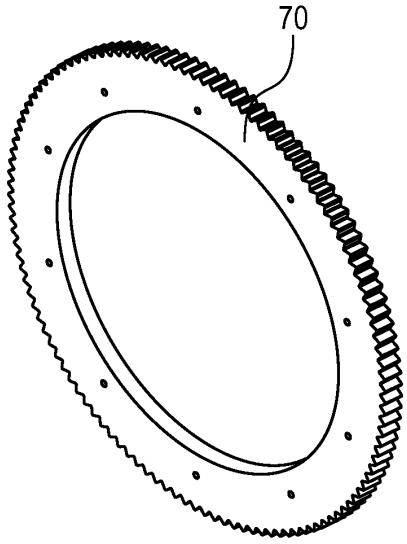

FIG. 13

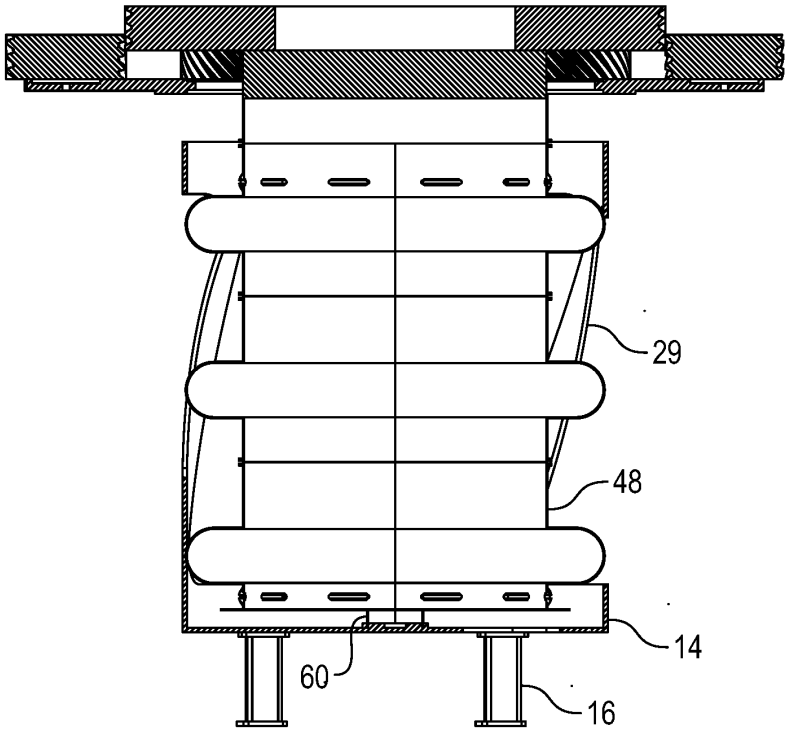

FIG. 14

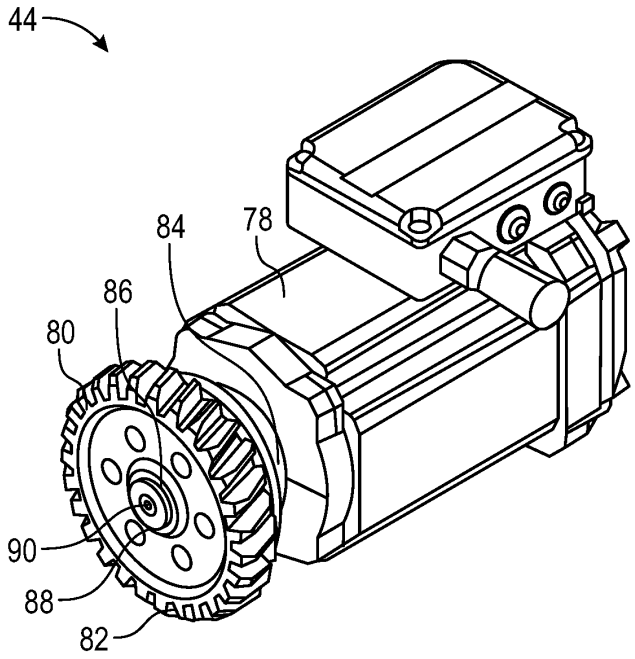

FIG. 15

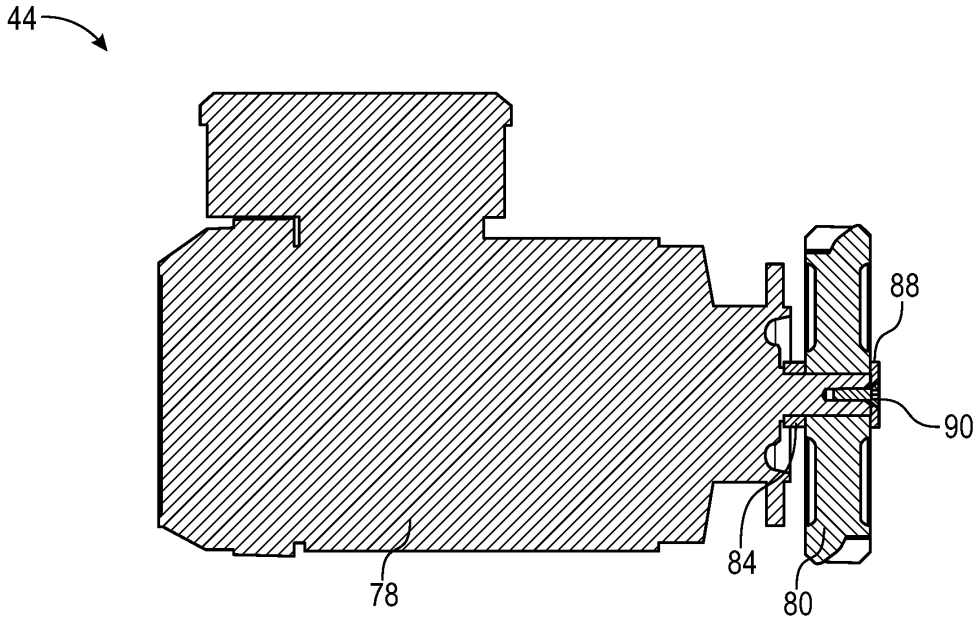

FIG. 16

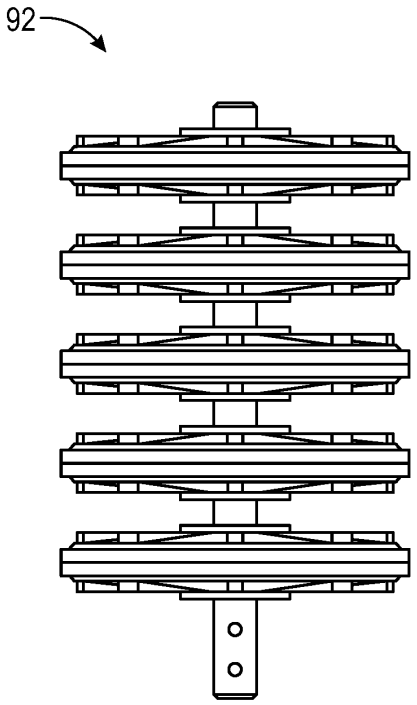

FIG. 17

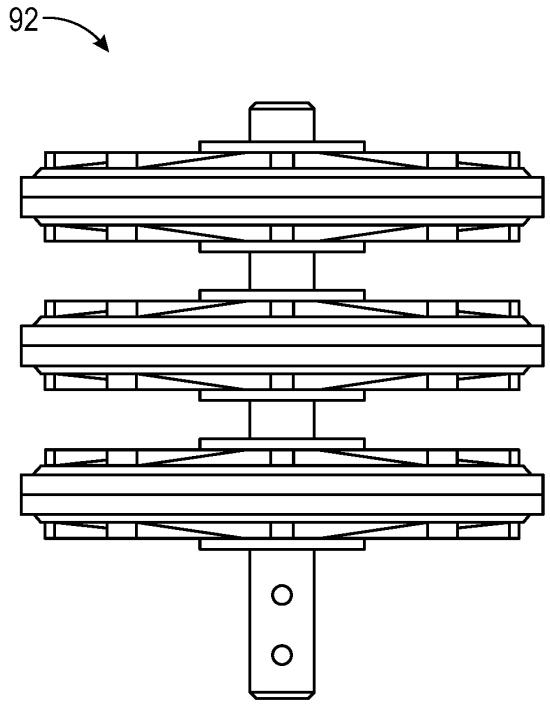

FIG. 18

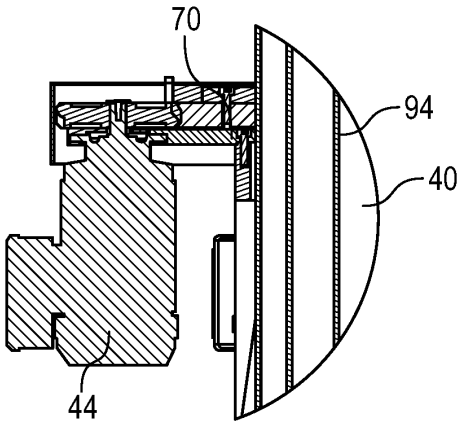

FIG. 19

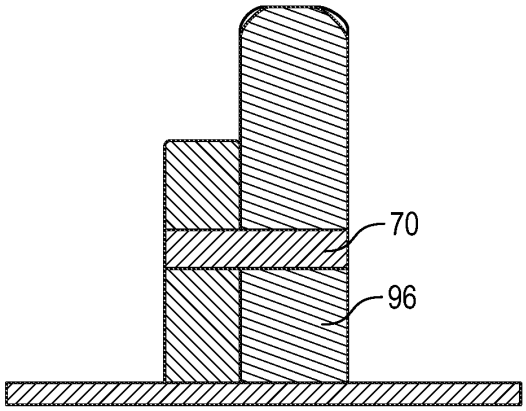

FIG. 20

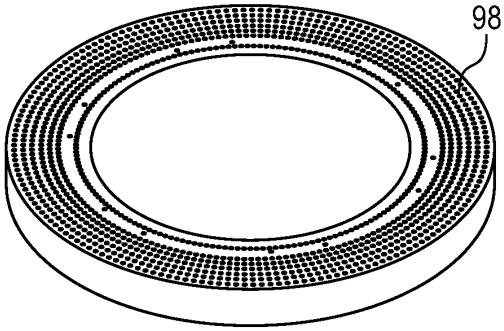

FIG. 21

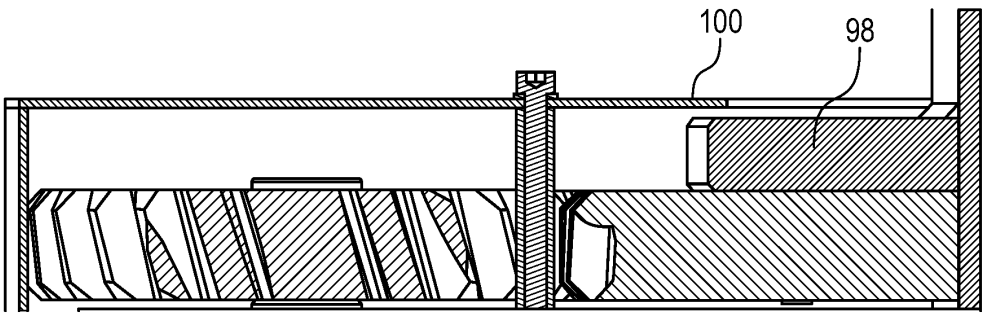

FIG. 22

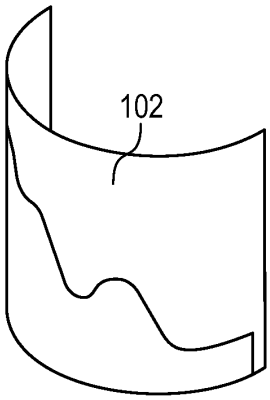

FIG. 23

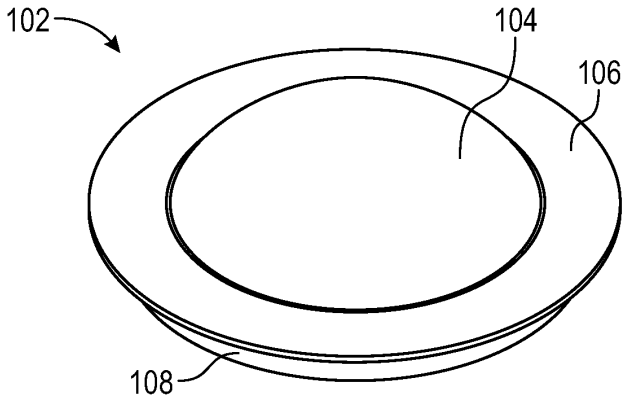

FIG. 24

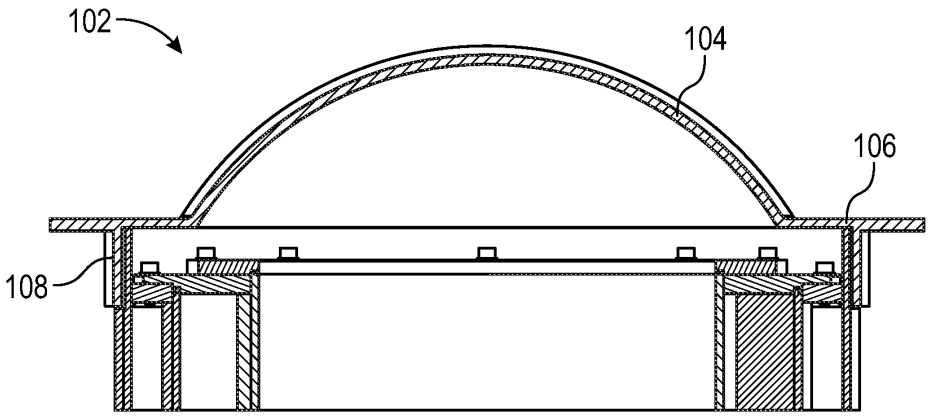

FIG. 25

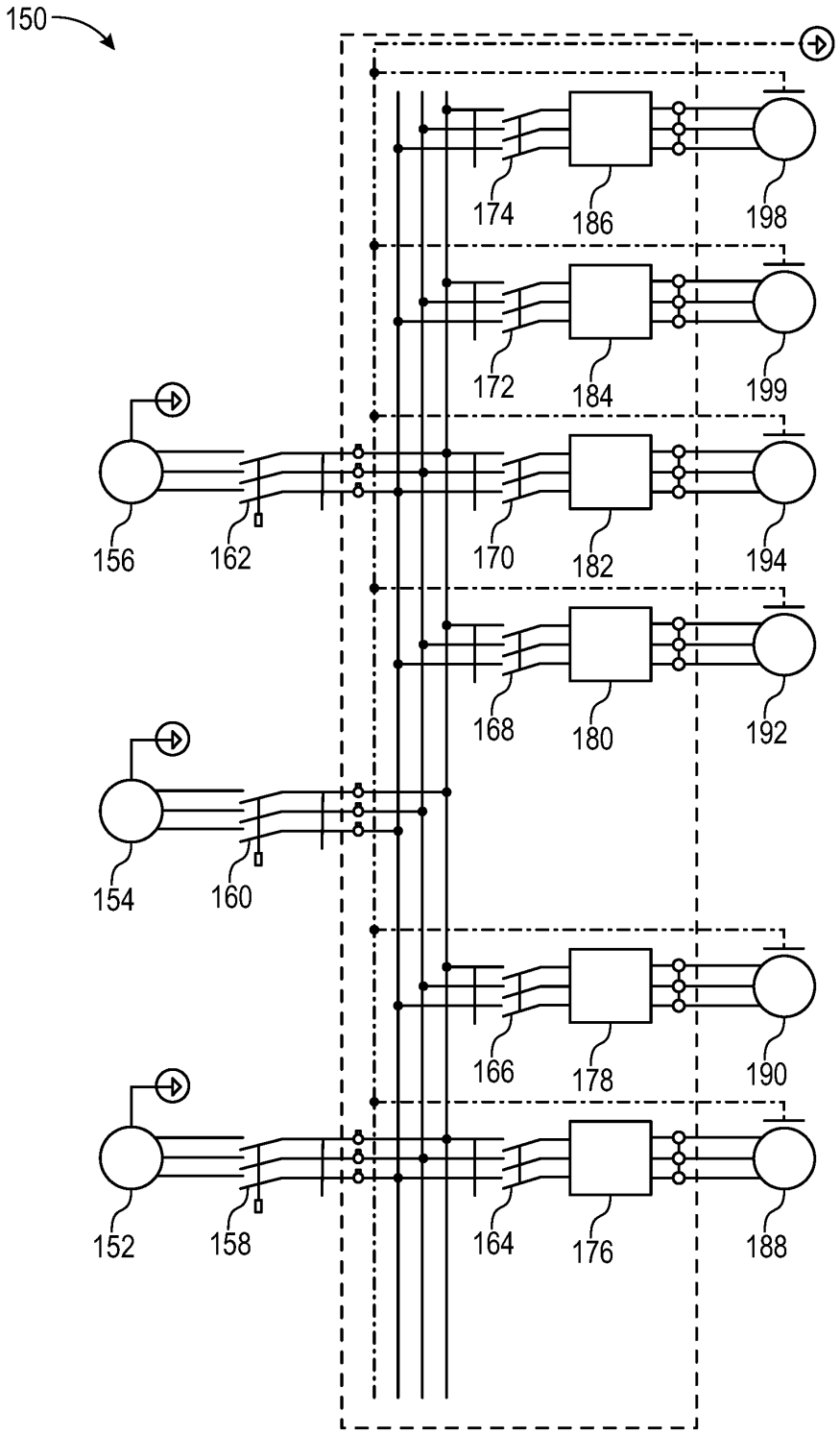
150
174
186
198
172
184
199
156
162
170
182
194
168
180
192
154
160
166
178
190
152
158
164
176
188

FIG. 26

200

Input data for load with 3 x (motors and pinion gear)				
Load mass	m_{load}	720 kg	720 kg	720 kg
Speed of rotation	n_{load}	250 rpm	250 rpm	250 rpm
Acceleration time	ta	60 s	60 s	60 s
Outside diameter of cylinder	D	750 mm	750 mm	750 mm
Inside diameter of cylinder	d	574 mm	574 mm	574 mm
Length of cylinder	L	900 mm	900 mm	900 mm
Friction coeficient	$\mu_{bearings}$	0,01 n/a	0,01 n/a	0,01 n/a
Friction diameter	dμ	676 mm	676 mm	676 mm
Number of motors	No.	3 n/a	3 n/a	3 n/a
Preload		30 %	30 %	30 %
Transmision data for gearing				
Modul	m	5 mm	5 mm	5 mm
Number of teeth driver gear	z1	27 n/a	27 n/a	27 n/a
Number of teeth driven gear	z2	150 n/a	150 n/a	150 n/a
Mass driver gear	mz1	6,29 kg	6,29 kg	6,29 kg
Mass driven gear	mz2	81,89 kg	81,89 kg	81,89 kg
Efficiency coefficient of additional transmision	Eta-z	0,9 n/a	0,9 n/a	0,9 n/a
Max tangential force	Ftmax	40000 N	40000 N	40000 N
Teeth helix angle	β	19,528 deg	19,528 deg	19,528 deg
Motor data		m550 H 71L4	m550 H 90M4 50 Hz	SEW IE3 DRN80M4
Nominal speed	nn	1430 rpm	1465 rpm	1440 rpm
Nominal torque	Mn'	3,67 Nm	7,17 Nm	4,95 Nm
Nominal torque at n1	Mn'	3,67 Nm	7,17 Nm	4,95 Nm
Ramp up torque	M0	6,95 Nm	16,20 Nm	13,37 Nm
Max. torque	Mmax	6,95 Nm	16,20 Nm	15,35 Nm
Motor idle torque	Mtr-m	0 Nm	0 Nm	0 Nm
Motor rotor inertia	Im	0,00133 Kgm^2	0,00538 Kgm^2	0,00262 Kgm^2
Inertia from additional reduction(brake, for example)	Id	0 Kgm^2	0 Kgm^2	0 Kgm^2
Motor efficiency	$\eta_{100\%}$	0,771 n/a	0,75 n/a	0,829 n/a
Motor nominal power	Pm	0,55 kW	1,10 kW	0,75 kW
Motor acceleration power	Pacc	1,04 kW	2,49 kW	2,31 kW

FIG. 27

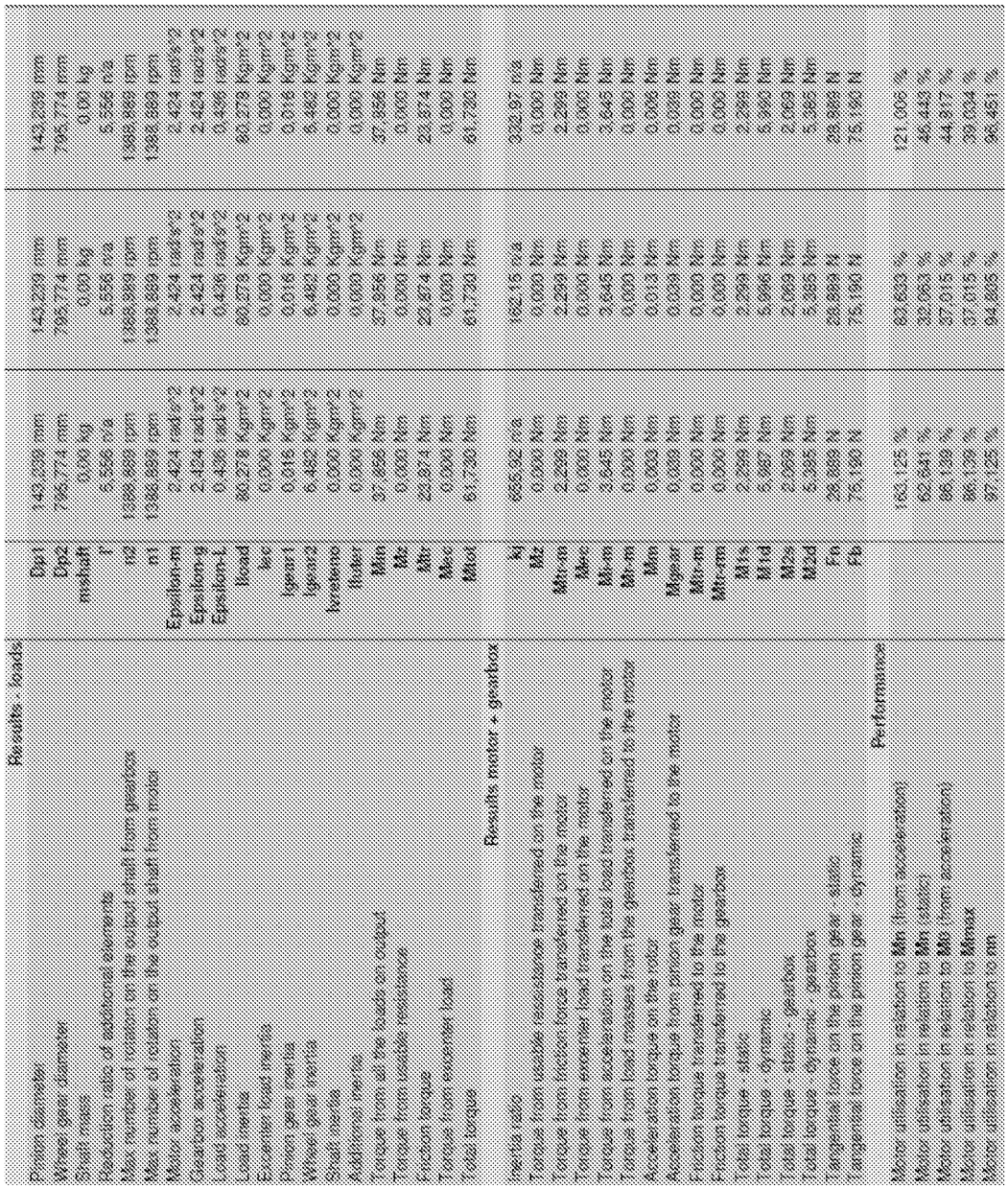
Results - loads
Power density
Wheel gear damage
Shaft loss
Resultant force of additional elements
Max. moment of inertia on the output shaft from gearbox
Max. moment of inertia on the input shaft from motor
Motor acceleration
Gearbox acceleration
Unit acceleration
Load inertia
External load inertia
Power gear ratio
Wheel gear inertia
Stall time
Additional inertia
Torque from all the losses on output
Torque from inertial resistance
Friction torque
Torque from efficiency loss
Total torque
Results motor + gearbox
Inertia ratio
Torque from inertial resistance transfered on the motor
Torque from friction torque transfered on the motor
Torque from efficiency loss transfered on the motor
Torque from acceleration on the total load transfered on the motor
Torque from load inertia transfered to the motor
Acceleration on the motor
Acceleration torque transfered on the motor
Friction torque transfered to the gearbox
Unit inertia - static
Unit torque - dynamic
Unit torque - static - gearbox
Unit torque - dynamic - gearbox
Acceleration time on the motor gear - static
Acceleration time on the motor gear - dynamic
Performance
Max. utilization in relation to Mn (from acceleration)
Max. utilization in relation to Mn (static)
Max. utilization in relation to Mn (from acceleration)
Max. utilization in relation to Mmax
Motor utilization in relation to rm
Dyn1
Dyn2
mshaft
i
i2
n1
Epsilonm
Epsilong
Epsilon-L
load
Ier
Igear1
Igear2
Inotor
Mn
Mz
Mb
Mc1
Mc2
Nj
Mz
Mn+m
Mc
Mm
Mn-m
Mo
Mgear
Mtr-m
Mr-m
M1c
M1d
M2c
M2d
Fn
Fb
149.239 mm
795.774 mm
0.00 kg
5.556 n.a
1988.969 mm
1988.869 mm
2.424 rad/s2
0.435 rad/s2
80.278 Kgm2
0.000 Kgm2
0.015 Kgm2
6.482 Kgm2
0.000 Kgm2
0.000 Kgm2
37.856 Nm
0.000 Nm
23.874 Nm
0.000 Nm
61.730 Nm
695.92 n/a
0.000 Nm
2.269 Nm
0.000 Nm
2.645 Nm
0.000 Nm
0.003 Nm
0.039 Nm
0.000 Nm
0.000 Nm
2.259 Nm
5.667 Nm
2.269 Nm
5.385 Nm
28.888 N
75.190 N
62.125 %
62.641 %
56.139 %
86.178 %
97.125 %
149.239 mm
795.774 mm
0.00 kg
5.556 n.a
1988.969 mm
1988.869 mm
2.424 rad/s2
2.424 rad/s2
0.435 rad/s2
80.278 Kgm2
0.000 Kgm2
0.015 Kgm2
6.482 Kgm2
0.000 Kgm2
0.000 Kgm2
37.856 Nm
0.000 Nm
23.874 Nm
0.000 Nm
61.730 Nm
622.15 n/a
0.000 Nm
2.269 Nm
0.000 Nm
2.645 Nm
0.000 Nm
0.013 Nm
0.039 Nm
0.000 Nm
0.000 Nm
2.259 Nm
5.667 Nm
2.269 Nm
5.385 Nm
28.888 N
75.190 N
82.833 %
82.853 %
87.015 %
87.019 %
94.825 %
149.239 mm
795.774 mm
0.00 kg
5.556 n.a
1988.969 mm
1988.869 mm
2.424 rad/s2
2.424 rad/s2
0.435 rad/s2
80.278 Kgm2
0.000 Kgm2
0.015 Kgm2
6.482 Kgm2
0.000 Kgm2
0.000 Kgm2
37.856 Nm
0.000 Nm
23.874 Nm
0.000 Nm
61.730 Nm
622.15 n/a
0.000 Nm
2.269 Nm
0.000 Nm
2.645 Nm
0.000 Nm
0.013 Nm
0.039 Nm
0.000 Nm
0.000 Nm
2.259 Nm
5.667 Nm
2.269 Nm
5.385 Nm
28.888 N
75.190 N
121.006 %
44.443 %
44.917 %
39.024 %
94.825 %

210

FIG. 28

220

Input data for load with 3 x (motors and pinion gear)				
Load mass	m_{load}	600 kg	600 kg	600 kg
Speed of rotation	n_{load}	250 rpm	250 rpm	250 rpm
Acceleration time	t_a	60 s	60 s	60 s
Outside diameter of cylinder	D	750 mm	750 mm	750 mm
Inside diameter of cylinder	d	574 mm	574 mm	574 mm
Length of cylinder	L	900 mm	900 mm	900 mm
Friction coeficient	$\mu_{bearings}$	0,01 n/a	0,01 n/a	0,01 n/a
Friction diameter	dμ	676 mm	676 mm	676 mm
Number of motors	No.	3 n/a	3 n/a	3 n/a
Preload		30 %	30 %	30 %
Transmision data for gearing				
Modul	m	5 mm	5 mm	5 mm
Number of teeth driver gear	z1	27 n/a	27 n/a	27 n/a
Number of teeth driven gear	z2	150 n/a	150 n/a	150 n/a
Mass driver gear	mz1	6,29 kg	6,29 kg	6,29 kg
Mass driven gear	mz2	81,89 kg	81,89 kg	81,89 kg
Efficiency coefficient of additional transmision	Eta-z	0,9 n/a	0,9 n/a	0,9 n/a
Max tangential force	Ftmax	40000 N	40000 N	40000 N
Teeth helix angle	β	19,528 deg	19,528 deg	19,528 deg
Motor data		m550-H 71L4	m550-H 90M4 50 Hz	SEW IE3 DRN90M4
Nominal speed	nn	1430 rpm	1465 rpm	1440 rpm
Nominal torque	Mn'	3,67 Nm	7,17 Nm	4,95 Nm
Nominal torque at n1	Mn'	3,67 Nm	7,17 Nm	4,95 Nm
Ramp up torque	M0	6,95 Nm	16,20 Nm	13,37 Nm
Max. torque	Mmax	6,95 Nm	16,20 Nm	15,35 Nm
Motor idle torque	Mtr-m	0 Nm	0 Nm	0 Nm
Motor rotor inertia	Im	0,00133 Kgm^2	0,00538 Kgm^2	0,00262 Kgm^2
Inertia from additional reduction(brake, for example)	Id	0 Kgm^2	0 Kgm^2	0 Kgm^2
Motor efficiency	$\eta_{100\%}$	0,771 n/a	0,75 n/a	0,829 n/a
Motor nominal power	Pm	0,55 kW	1,10 kW	0,75 kW
Motor acceleration power	Pacc	1,04 kW	2,49 kW	2,31 kW

FIG. 29

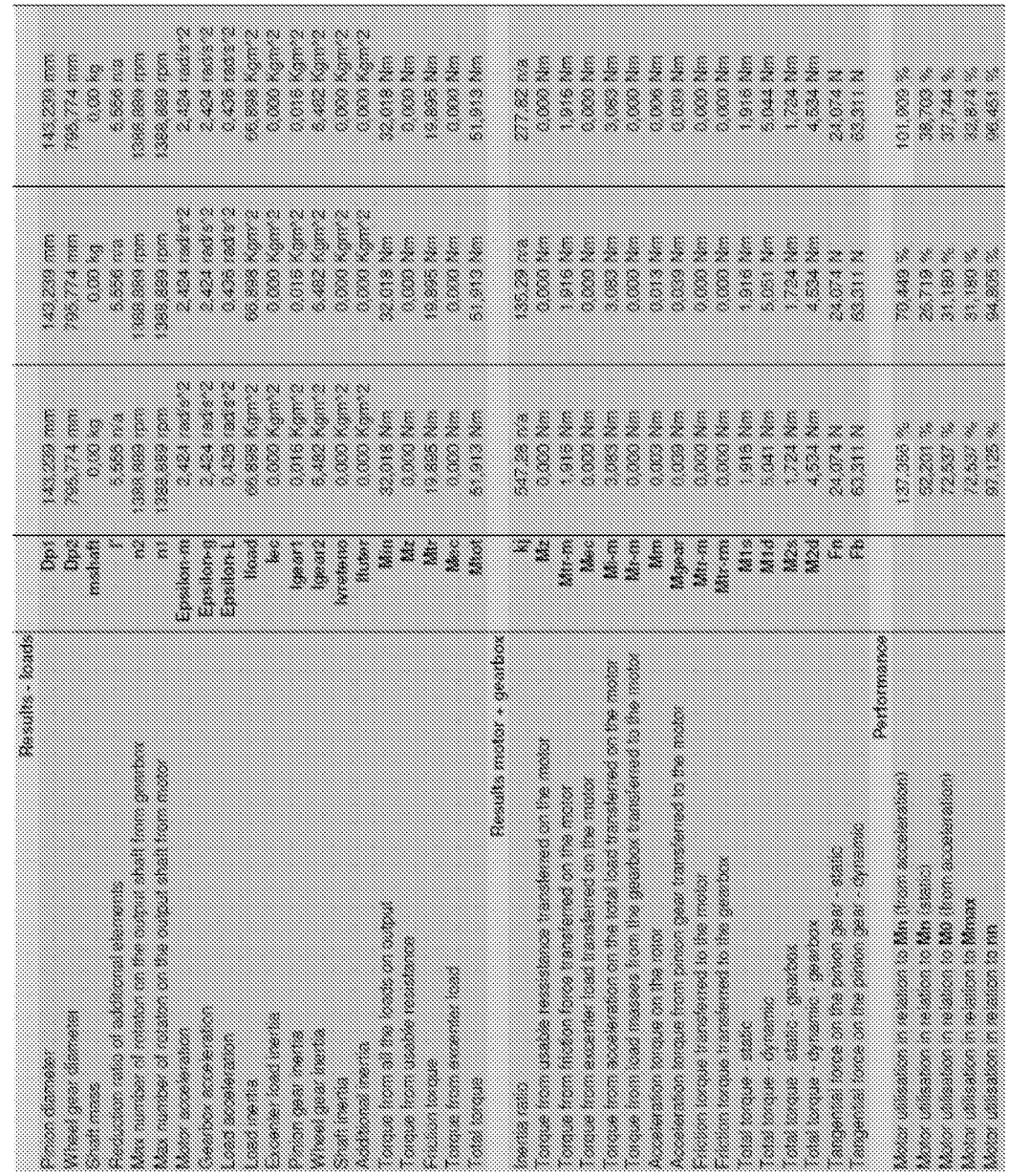
230
Results - loads
Point estimates
Wheel rotational speed
Slip ratio
Resultant force at individual elements
Max number of nodes on the wheel that in contact
Min number of nodes on the wheel that in contact
Max penetration
Load acceleration
Load velocity
Equivalent radius
Point on the wheel
Wheel rotation
Slip velocities
Tangent force at the contact point
Radial force
Torque from deformation load
Torque from damping
Results radar + geobox
Vertical force acting on the wheel
Torque from total forces acting on the wheel
Torque from acceleration on the wheel
Torque from acceleration on the wheel
Torque from the ground reaction forces acting on the wheel
Acceleration of the wheel
Acceleration of the wheel
Friction force exerted on the wheel
Friction force exerted on the wheel
Torque due to friction
Torque due to friction
Torque due to friction
Torque due to friction
Torque due to friction
Performance
Mx position of vehicle in Mx (from accelerator)
My position of vehicle in My (east)
Mz position of vehicle in Mz (from accelerator)
Mx velocity of vehicle in Mx/sec
My velocity of vehicle in Mx/sec
Mz velocity of vehicle in Mx/sec
Dpx
Dpz
radius
f
w2
w1
Epsilon m
Epsilon+1
Epsilon-1
load
ks
speed
speed
radius
Nuber
Min
Max
Mx
Max
Min
Mx
Mz
Fn
Fb
Xi
Mz
Mx-m
Mx
My-m
My
Mpar
Mz-m
Mz-m
Mrs
Mrd
Mzs
Mzd
Fn
Fb
14.229 cm
79.774 cm
0.00 kg
4.556 n/a
164.494 cm
1388.869 cm
2.424 rad/s2
2.424 rad/s2
0.436 rad/s2
99.999 Kg/s2
0.000 Kg/s2
0.016 Kg/s2
8.422 Kg/s2
0.000 Kg/s2
0.000 Kg/s2
32.018 Nm
0.000 Nm
19.695 Nm
0.000 Nm
91.913 Nm
277.22 n/a
0.000 Nm
1.916 Nm
0.000 Nm
3.552 Nm
0.000 Nm
0.014 Nm
0.039 Nm
0.000 Nm
0.000 Nm
1.916 Nm
3.944 Nm
1.724 Nm
4.834 Nm
24.074 N
63.011 N
101.809 %
98.709 %
77.744 %
53.824 %
96.491 %
14.229 cm
79.774 cm
0.00 kg
4.556 n/a
164.494 cm
1388.869 cm
2.424 rad/s2
2.424 rad/s2
0.436 rad/s2
99.999 Kg/s2
0.000 Kg/s2
0.016 Kg/s2
8.422 Kg/s2
0.000 Kg/s2
0.000 Kg/s2
32.018 Nm
0.000 Nm
19.695 Nm
0.000 Nm
91.913 Nm
54.28 n/a
0.000 Nm
1.916 Nm
0.000 Nm
3.552 Nm
0.000 Nm
0.013 Nm
0.039 Nm
0.000 Nm
0.000 Nm
1.916 Nm
3.941 Nm
1.724 Nm
4.834 Nm
24.074 N
63.011 N
127.392 %
52.231 %
72.52 %
51.15 %
97.15 %
14.229 cm
79.774 cm
0.00 kg
4.556 n/a
164.494 cm
1388.869 cm
2.424 rad/s2
2.424 rad/s2
0.436 rad/s2
99.999 Kg/s2
0.000 Kg/s2
0.016 Kg/s2
8.422 Kg/s2
0.000 Kg/s2
0.000 Kg/s2
32.018 Nm
0.000 Nm
19.695 Nm
0.000 Nm
91.913 Nm
277.22 n/a
0.000 Nm
1.916 Nm
0.000 Nm
3.552 Nm
0.000 Nm
0.014 Nm
0.039 Nm
0.000 Nm
0.000 Nm
1.916 Nm
3.944 Nm
1.724 Nm
4.834 Nm
24.074 N
63.011 N
101.809 %
98.709 %
77.744 %
53.824 %
96.491 %

FIG. 30

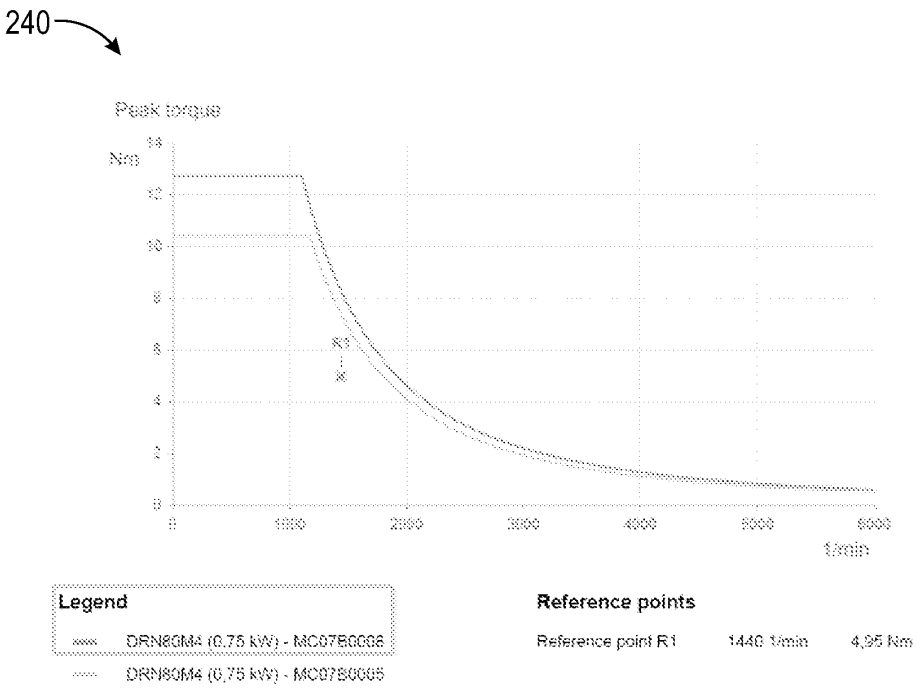
240
Peak torque
Nm
14
12
10
8
6
4
2
0
R1
0
1000
2000
3000
4000
5000
6000
1/min
Legend
DRN80M4 (0,75 kW) - MC07B0008
DRN80M4 (0,75 kW) - MC07B0005
Reference points
Reference point R1
1440 1/min
4,95 Nm

FIG. 31

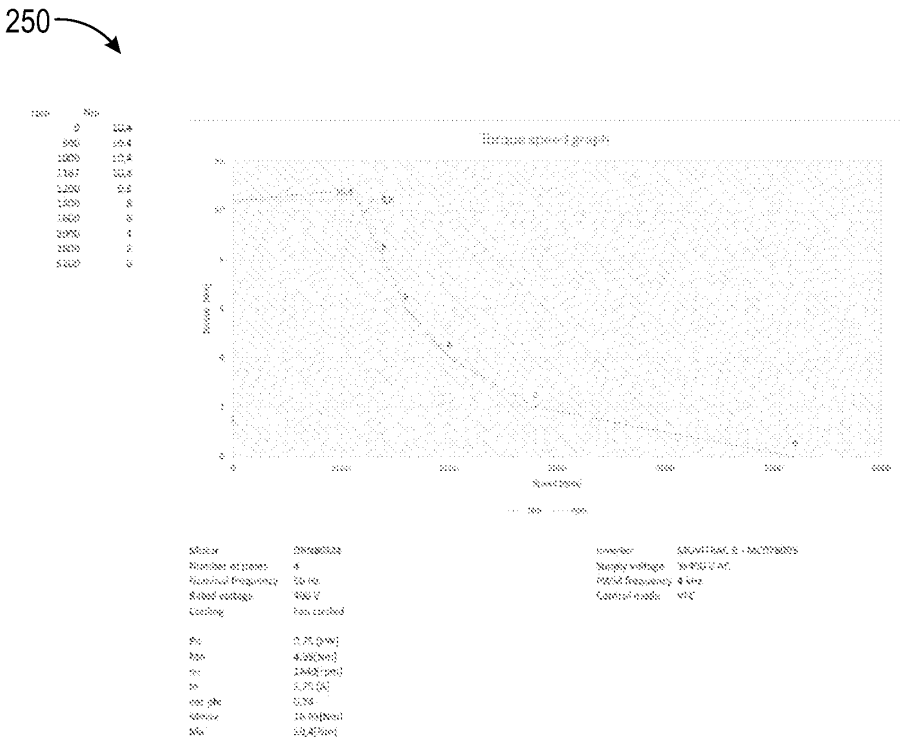
250

FIG. 32

260

Input data:

Spur Gear, Gear Rack

Calculation method		Spur gear	
Calculation variants		Standard gauge spur gears	
Calculation standard		DIN 3990	
Geometry calculation incl. measurement ?		no	
Calculation of deviations ?		yes	
Type of toothing		External toothing	
Spur gear geometry			
Basic data			
Normal modulus		m_n = 5	mm
Helical angle		β : 19,528	°
Centre distance		a : 0	mm
Driving element		Pinion	
Input of geometry		z1, z2	
Number of teeth (pinion)		z_1 = 27	
Number of teeth (wheel)		z_2 = 150	
Translation ratio		i = 5,556	
	Pinion	**Wheel**	
Tooth width	b = 50	50	mm
Input method for tooth-tip height modification		No input	
Tip edge modification		No	
Addendum modification according to DIN 3992/3993			
Input methode profile shift coefficients		Sum of profile shift coefficient	
Sum of profile shift coefficient		x_Σ = 0	
Basic gear rack	**Pinion**	**Wheel**	
Tip clearance factor	c_p^* = 0,25	0,25	
Root fillet radius factor	ρ_{fp}^* : 0,25	0,25	
Pressure angle		α_p = 20	°
Tooth-tip thickness factor		s_{an}^* = 0,2	

FIG. 33

270

Results:

General data

Effective number of teeth ratio	u	=	5,556	
Effective translation ratio	i	=	5,556	
Transverse pressure angle	α_t	=	21,116	°
Pressure angle at pitch cylinder	α_{wt}	=	21,116	°
Ground lead	β_b	=	18,307	°
Zero centre distance	a_d	=	469,507	mm

FIG. 34

280

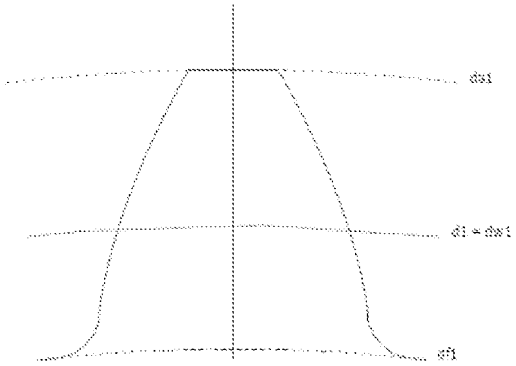

FIG. 35

290

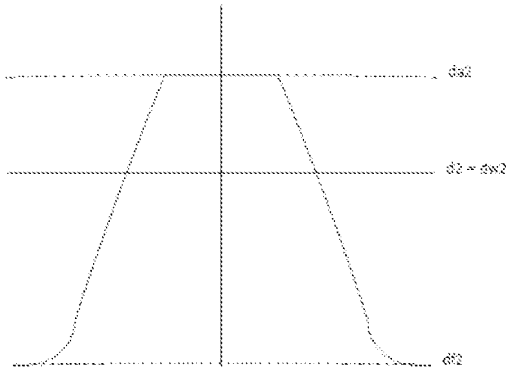

FIG. 36

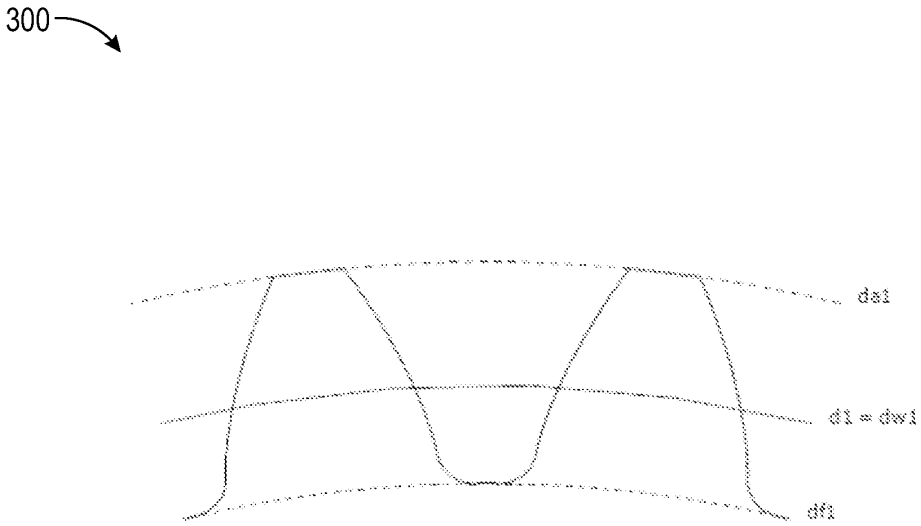

FIG. 37

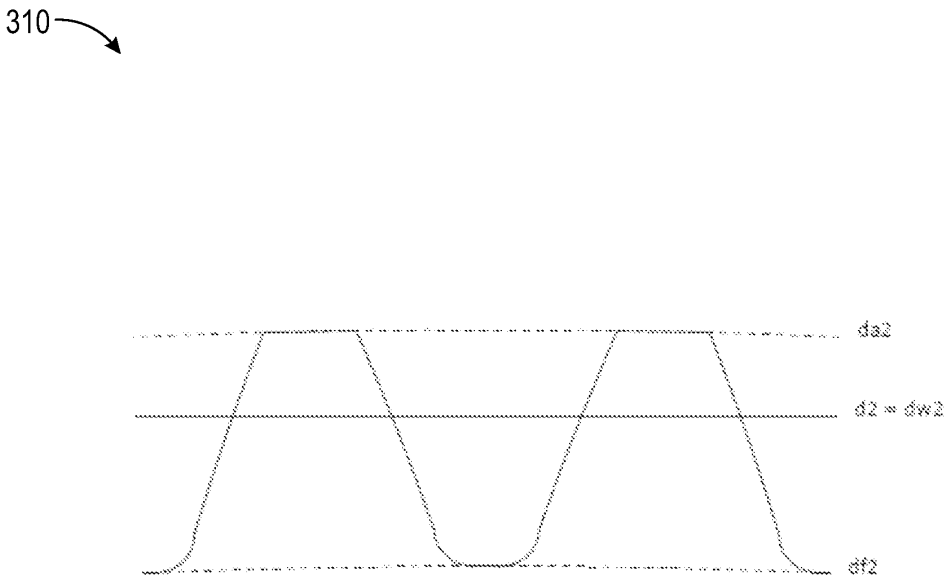

FIG. 38

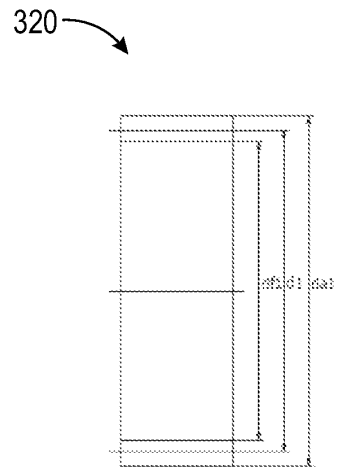

FIG. 39

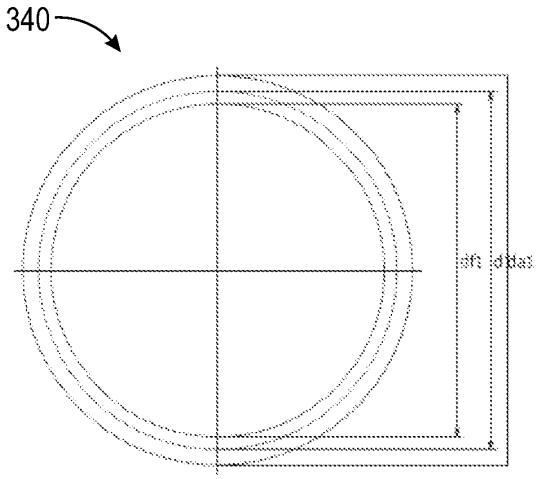

FIG. 40

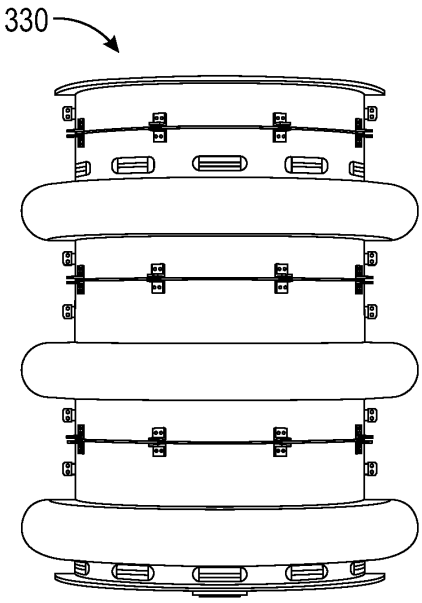

FIG. 41

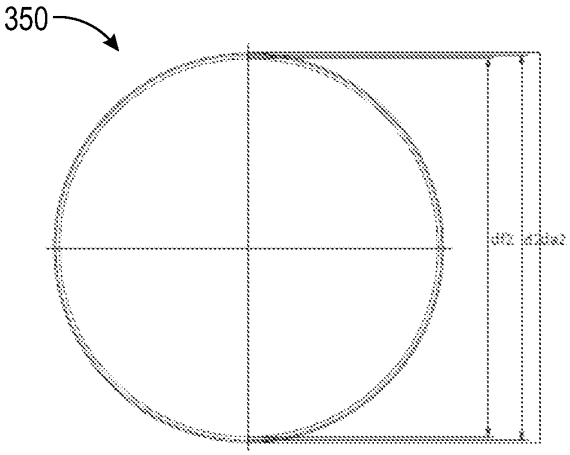

FIG. 42

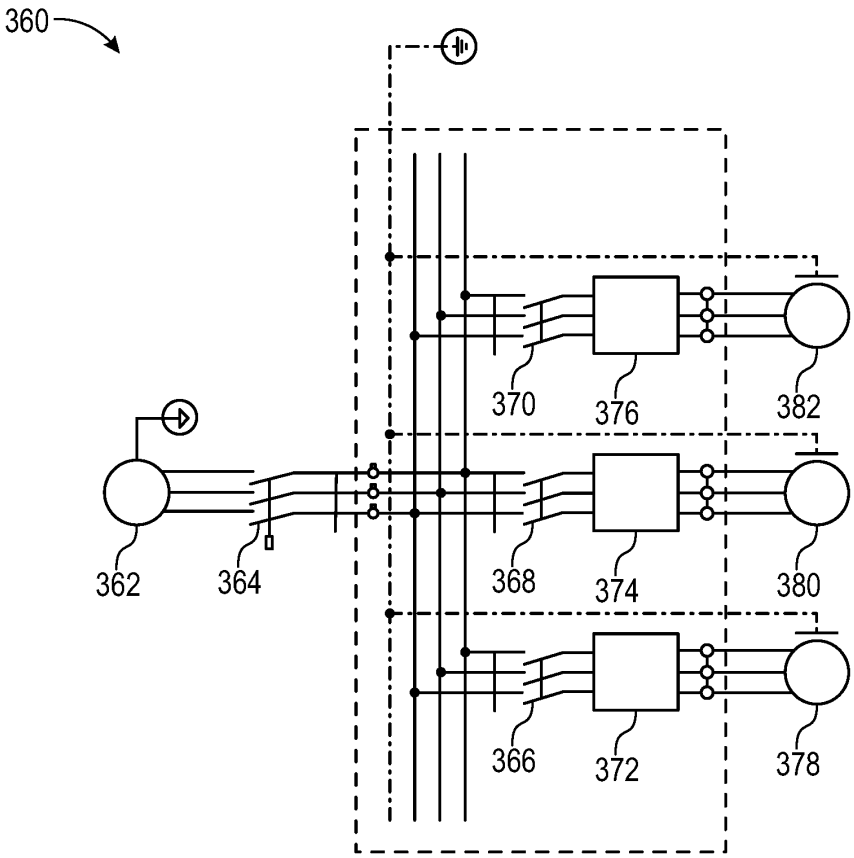

FIG. 43

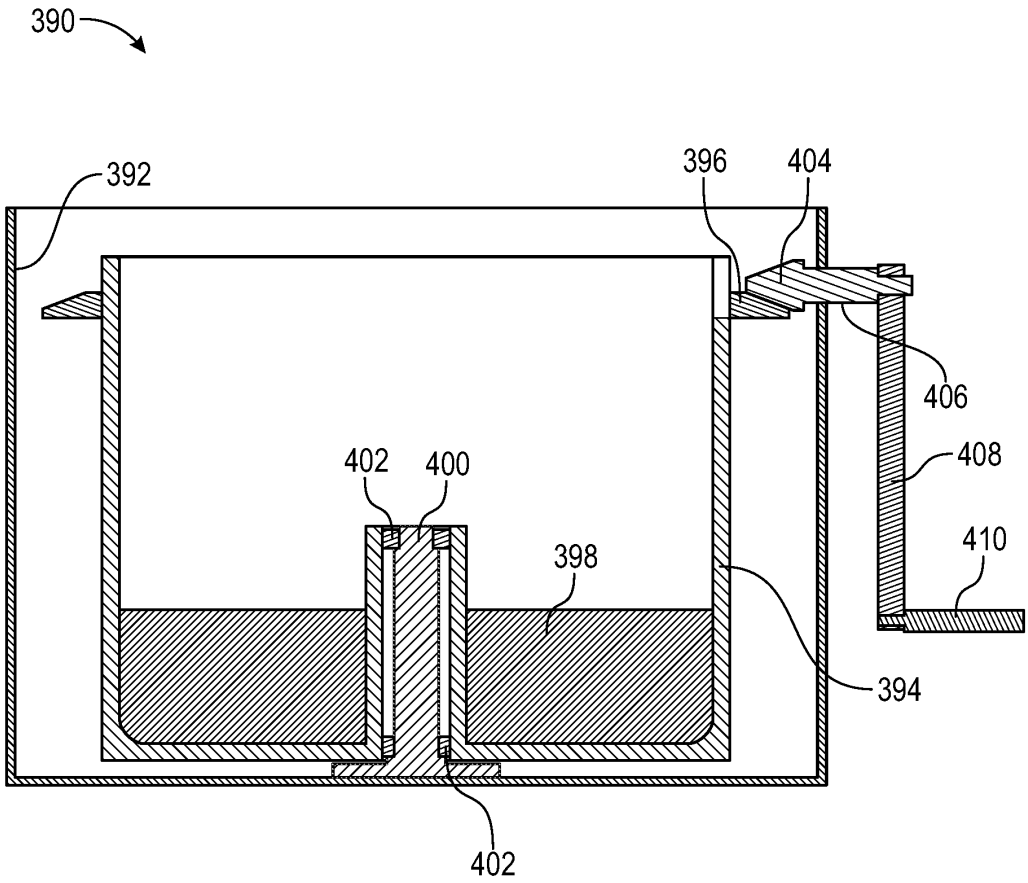

FIG. 44

420

Load			
Moment of inertia around Z axis	Ix	3.00218	[kgm2]
Mass of the mixing material	m	150	[kg]
Max rotational required speed	n	150	[rpm]
Max rotational required speed in seconds	ns	2.5	[rps]
Angular speed	ω	15.71	[rad/s]
Initial angular speed	ω0	0.00	[rad/s]
Diameter of the rotational cylinder	d	375	[mm]
Calculation			
Required speed of rotation	v	2.945	[m/s]
Acceleration time	ta	5	[s]
Initial acceleration time	t0	0	[s]
Angular acceleration	α	3.1416	[rad/s2]
Required maximum torque	T	9.43163	[Nm]
Human hand maximum force	F_{human}	200	[N]
Lever handle to centre distance	L	0.2	[m]
Maximum torque by hand	Th	40	[Nm]
Maximum rotational speed by human hand	n_{human}	2	[rps]
Maximum rotational speed by human hand	n_{human}	120	[rpm]
Number of teeth of driver	z1	9	
Number of teeth of driven	z2	7	
Transmision ratio	i	1.286	
Torque at driven gear - created by hand	Tdg	21.78	[Nm]
Rotational speed at driven gear	ndg	2.571	[rps]
Rotational speed at driven gear	ndg	154.29	[rpm]

FIG. 45

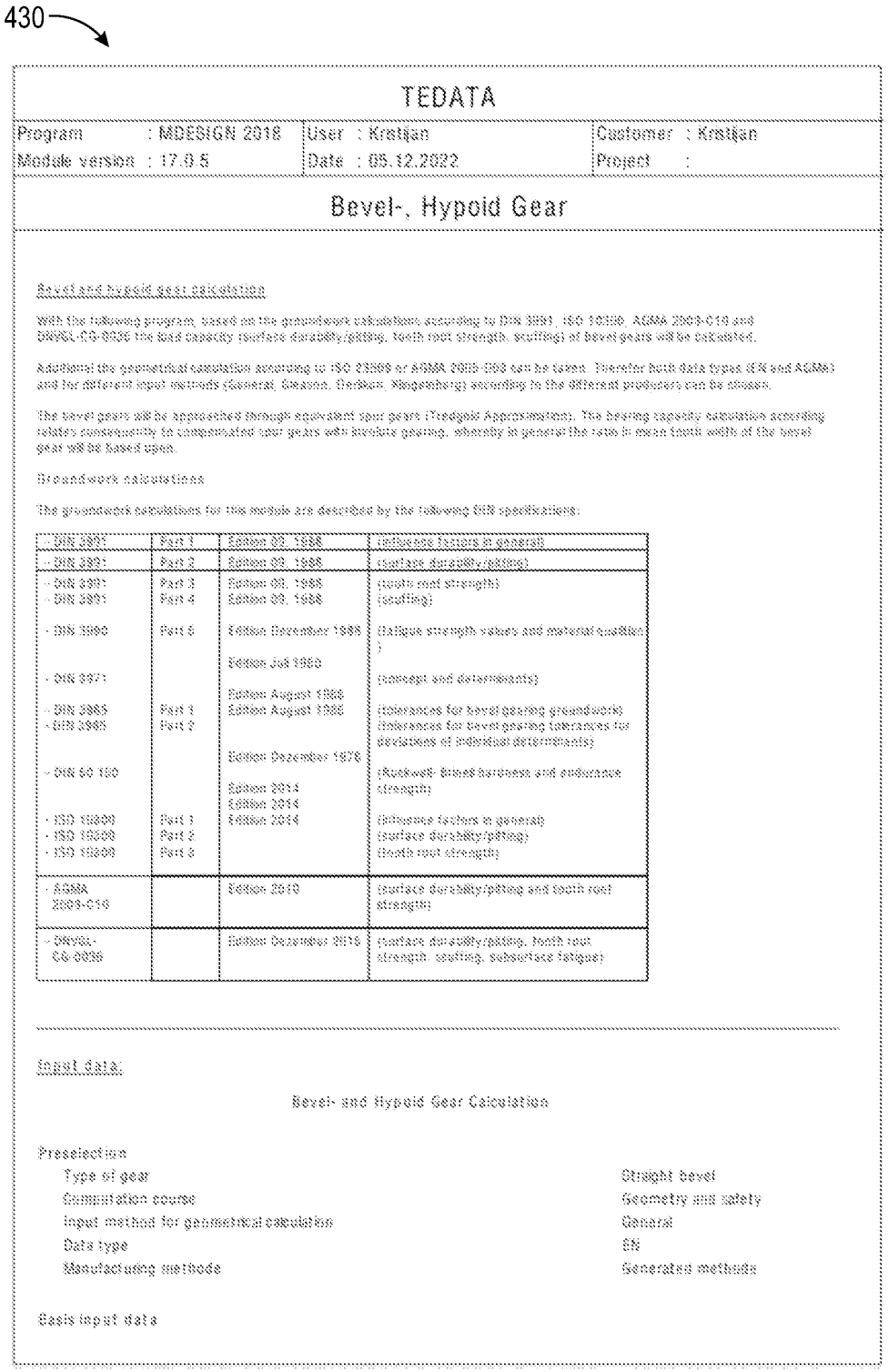
430
TEDATA
Program : MDESIGN 2018
Module version : 17.0.5
User : Kristjan
Date : 05.12.2022
Customer : Kristjan
Project :
Bevel-, Hypoid Gear
Bevel and hypoid gear calculation
With the following program, based on the groundwork calculations according to DIN 3991, ISO 10300, AGMA 2003-C10 and DNVGL-CG-0036 the load capacity (surface durability/pitting, tooth root strength, scuffing) of bevel gears will be calculated.
Additional the geometrical calculation according to ISO 23509 or AGMA 2005-D03 can be taken. Therefor both data types (KN and AGMA) and for different input methods (General, Gleason, Oerlikon, Klingelnberg) according to the different producers can be chosen.
The bevel gears will be approached through equivalent spur gears (Tredgold Approximation). The bearing capacity calculation according relates consequently to compensated spur gears with straight gearing, whereby in general the ratio in mean tooth width of the bevel gear will be taken upon.
Groundwork calculations
The groundwork calculations for this module are described by the following DIN specifications:
- DIN 3991 Part 1 Edition 09. 1988 (influence factors in general)
- DIN 3991 Part 2 Edition 09. 1988 (surface durability/pitting)
- DIN 3991 Part 3 Edition 09. 1988 (tooth root strength)
- DIN 3991 Part 4 Edition 09. 1988 (scuffing)
- DIN 3990 Part 6 Edition December 1986 (fatigue strength values and material qualities)
Edition July 1983
- DIN 3971 (concept and determinants)
Edition August 1988
- DIN 3965 Part 1 Edition August 1986 (tolerances for bevel gearing groundwork)
- DIN 3965 Part 2 (tolerances for bevel gearing tolerances for deviations of individual determinants)
Edition December 1978
- DIN 50 150 (Rockwell- Brinell hardness and endurance strength)
Edition 2014
Edition 2014
- ISO 10300 Part 1 Edition 2014 (influence factors in general)
- ISO 10300 Part 2 (surface durability/pitting)
- ISO 10300 Part 3 (tooth root strength)
- AGMA 2003-C10 Edition 2010 (surface durability/pitting and tooth root strength)
- DNVGL-CG-0036 Edition December 2019 (surface durability/pitting, tooth root strength, scuffing, subsurface fatigue)
Input data:
Bevel- and Hypoid Gear Calculation
Preselection
Type of gear Straight bevel
Commutation course Geometry and safety
Input method for geometrical calculation General
Data type KN
Manufacturing methode Generated methods
Basis input data

FIG. 46

440

TEDATA

Program : MDESIGN 2018	User : Kristijan	Customer : Kristijan
Module version : 17.0.5	Date : 05.12.2022	Project :

Bevel-, Hypoid Gear

Base of calculation		ISO 23509	
Hypoid offset	a	E = 0	mm
Shaft angle		Σ = 90	°
Number of teeth (pinion)	z_1	z = 7	
Number of teeth (wheel)	z_2	N = 9	
Face width	b_2	F = 28	mm
Outer pitch diameter (wheel)	d_{e2}	D = 60	mm
Mean spiral angle (wheel)	β_{m2}	γ_e : 0	°

Additional input data

Define backlash		jen	
Outer normal backlash		j_{en} : 0.05	mm
Nominal design pressure angle on coast side		α_{nC} = 25	°
Nominal design pressure angle on drive side		α_{nD} = 25	°
Choice for addendum and dedendum angle		Calculation	
Depthwise taper		Standard	
Profile shift coefficient		x_{hm1} = 0	
Basic crown gear addendum factor		k_{hap} = 1	
Basic crown gear dedendum factor		k_{hfp} = 1.25	
Thickness modification coefficient (theoretical)		x_{sm1} = 0.01	

Input data for bearing test

Calculation base		DIN 3991	
Operating		Push operating	
Performance		P : 0.1482	kW
Torque	T_1	T_p : 9.43183	N*m
Velocity	n_1	n_p = 150	1/min
Application factor	K_A	K_A = 1.1	

		Pinion	Wheel	
Quality class of gearing		6	6	
Averaged roughness (tooth flank)	R_{z1} = 20		20	µm
Averaged roughness (tooth root)	R_{z2} = 20		20	µm
Driving element			Pinion	
Flank modification			Crowning	
Force range FZG-test			11	
Mounting factor		K_{Hbe} : 1		
Face load factor contact stress	K_{Hb}	K_{Hv} : 0		
Face load factor bending stress	K_{Fb}	K_{Fv} : 0		
Transverse load factor contact stress		K_{Ha} : 0		
Transverse load factor bending stress		K_{Fa} : 0		

FIG. 47

450

TEDATA

Program : MDESIGN 2018	User : Kristijan	Customer : Kristijan
Module version : 17.0.5	Date : 05.12.2022	Project :

Bevel-, Hypoid Gear

		$x_{..}b_{eff}$ = 85	%
Input data			
Pinion-Material (strength values) according to		MDESIGN database	
Material designation		16NiCr4	
Material number		1.5714	
Material group		Casehardening steel	
Austenite content for casehardening steel		20-30%	
Standard dimension		dNp = 16	mm
Yield point for dNp		RpN = 695	MPa
Nominal stress number (bending)		s_{Flim} = 425	MPa
Allowable stress number of contact stress		s_{Hlim} = 1500	MPa
Modulus of elasticity		E = 210000	MPa
Poisson's ratio		n = 0,3	
Density		r = 7850	kg/m³
Wheel-Material (strength values) according to		MDESIGN database	
Material designation		16NiCr4	
Material number		1.5714	
Material group		Casehardening steel	
Austenite content for casehardening steel		20-30%	
Standard dimension		dNp = 16	mm
Yield point for dNp		RpN = 695	MPa
Nominal stress number (bending)		s_{Flim} = 425	MPa
Allowable stress number of contact stress		s_{Hlim} = 1500	MPa
Modulus of elasticity		E = 210000	MPa
Poisson's ratio		n = 0,3	
Density		r = 7850	kg/m³
Lubrication demand			
Basic oil temperature		q_{oil} = 24	°C
Density oil (15°C)		r_{Oil} = 877	kg/m³
Lubrication		Splash lubrication	
Additional cutter data			
Residual fillet undercut	no	no	
Protuberance on cutter		p_t = 0,22	mm
Grinding allowance		q = 0,14	mm
		Pinion	Wheel
Cutter edge radius	r_{aPG} = 0,38	0,38	
Minimal safety			
Safety factor for contact stress		S_{Hmin} = 1,1	

FIG. 48

460

TEDATA

Program : MDESIGN 2018	User : Kristjan	Customer : Kristjan
Module version : 17.0.5	Date : 05.12.2022	Project :

Bevel-, Hypoid Gear

Safty factor for bending stress $S_{F\,min} = 1,2$
Safety factor for scuffing $S_{Scan} = 1,3$

Results:

Basic gearing input data

Number of teeth (pinion)	z_1	=	7		
Number of teeth (wheel)	z_2	=	9		
Gear ratio	u	=	1,29		
Hypoid offset	a	=	0	mm	
Cutter radius	r_{c0}	=	0	mm	

Pitch cone parameters

Shaft angle	Σ	=	90	°	
Face width factor	c_{bet}	=	0,5		
			Pinion		Wheel
Pitch angle	d	=	37,87	52,13	°
Mean spiral angle	b_m	=	0	0	°
Mean cone distance	R_m	=	28,01	28,01	mm

Supplementary data

Nominal design pressure angle (on drive side)	a_{d1}	=	25	°	
Nominal design pressure angle (on coast side)	a_{d2}	=	25	°	
Influence factor of limit pressure angle	f_{alim}	=	0		
Profile shift coefficient	x_{hm1}	=	0		
Basic crown gear addendum factor	h_{a0}	=	1		
Basic crown gear dedendum factor	h_{f0}	=	1,25		
Thickness modification coefficient (theoretical)	x_{smn}	=	0,01		

Basic data

Mean normal module	m_{mn}	=	4,91	mm	
Outer transverse module	m_{et}	=	6,87	mm	
Mean normal pressure angle	a_n	=	25	°	
Clearance	c	=	1,23	mm	

Geometry

Cone distances

				Pinion	Wheel
Inner pitch cone distance	R_i	=	18,01	18,01	mm
Outer pitch cone distance	R_e	=	38,01	38,01	mm

Diameters

			Pinion	Wheel

FIG. 49

470

TEDATA

Program : MDESIGN 2018	User : Kristjan	Customer : Kristjan
Module version : 17.0.5	Date : 05.12.2022	Project :

Bevel-, Hypoid Gear

Inner pitch diameter	d_i	=	22,11	28,43	mm
Mean pitch diameter	d_m	=	34,39	44,21	mm
Outer pitch diameter	d_e	=	46,67	60	mm
Inner diameter	d_{fi}	=	26,4	31,77	mm
Outside diameter	d_{ae}	=	57,88	65,72	mm
Inner root cone diameter	d_{Ri}	=	15,88	23,56	mm
Outer root cone diameter	d_{Re}	=	39,61	49,77	mm
Mean normal diameter	d_{mn}	=	43,56	72,02	mm

Tooth depths

				Pinion	Wheel
Inner whole depth	h_i	=	6,67	6,67	mm
Outer whole depth	h_e	=	10,44	10,44	mm
Inner addendum	h_{ai}	=	2,72	2,72	mm
Mean addendum	h_{am}	=	4,91	4,91	mm
Outer addendum	h_{ae}	=	7,11	7,11	mm
Inner dedendum	h_{fi}	=	3,95	5,95	mm
Mean dedendum	h_{fm}	=	5,14	5,14	mm
Outer dedendum	h_{fe}	=	8,33	8,33	mm
Mean chordal addendum	h_{amc}	=	5,19	5,04	mm
Mean whole depth	h_m	=	11,05	mm	
Mean working depth	h_{mw}	=	9,83	mm	

Face widths

				Pinion	Wheel
Face width	b	=	20	20	mm
Face width from calculation point to outside	b_e	=	10	10	mm
Face width from calculation point to inside	b_i	=	10	10	mm

Tooth thicknesses

				Pinion	Wheel
Thickness modification coefficient	x_{hm}	=	0,008	-0,012	
Mean normal circular tooth thickness	s_{mn}	=	7,795	7,668	mm
Mean transverse circular thickness	s_{mt}	=	7,795	7,538	mm
Mean normal chordal tooth thickness	s_{mnc}	=	7,783	7,684	mm

Angles

				Pinion	Wheel
Face angle	δ_a	=	50,24	64,49	°
Root angle	δ_f	=	25,51	39,76	°
Addendum angle	θ_a	=	12,37	12,37	°
Dedendum angle	θ_f	=	12,37	12,37	°

	Pinion	Wheel
Undercut check:	successful	successful

Bearing test results:

FIG. 50

480

TEDATA

Program : MDESIGN 2018	User : Kristijan	Customer : Kristijan
Module version : 17.0.5	Date : 05.12.2022	Project :

Bevel-, Hypoid Gear

Force and torque						
Torque rating	T_1	=		9,43	N*m	
Circumference at the pitch circle	F_{mt}	=		948,54	N	
Axial force	F_{ax}	=	157,04		201,91	N
Radial force	F_{rad}	=	201,91		157,04	N
Number of load cycles	N_L	=	0		0	
Influencing factors						
Dynamic factor	K_V	=		1		
Face load factor for contact stress	K_{Hb}	=		1,5		
Face load factor for bending stress	K_{Fb}	=		1,5		
Transverse load factor for contact stress	K_{Ha}	=		1,11		
Transverse load factor for bending stress	K_{Fa}	=		1,11		
Surface durability (pitting)						
Bevel gear factor (flank)	Z_K	=		0,85		
Zone factor	Z_H	=		2,29		
Elasticity factor	Z_E	=		191,65		
Overlapping factor (flank pressure)	Z_ε	=		0,85		
Helical factor (flank pressure)	Z_υ	=		1		
Lubricant factor	Z_L	=		0,91		
Roughness factor	Z_R	=		0,85		
Speed factor	Z_v	=		0,94		
Individual meshing factor (pinion)	Z_B	=		1,31		
Individual meshing factor (wheel)	Z_D	=		0,98		
					Pinion	Wheel
Size factor	Z_X	=	1		1	
Contact stress	s_H	=	770,93		573,98	N/mm²
Boundary contact stress	s_{HG}	=	1089,58		1089,68	N/mm²
Permissible contact stress	s_{HP}	=	990,61		990,61	N/mm²
Safety factor for contact stress	S_H	=	1,41		1,9	
Tooth root strength						
Overlapping factor (root stress)	Y_ε	=		0,83		
Helical factor (root stress)	Y_b	=		1		
					Pinion	Wheel
Tooth form factor	Y_{Fa}	=	3,02		3,12	
Stress correction factor	Y_{Sa}	=	1,48		1,5	
Size factor	Y_X	=	1		1	
Relative surface factor	Y_{Rrelt}	=	0,99		0,99	
Relative support coefficient	Y_{relT}	=	0,93		0,94	
Tooth root stress	s_F	=	44,55		46,67	N/mm²
Boundary tooth root stress	s_{FG}	=	786,68		789,64	N/mm²
Permissible tooth root stress	s_{FP}	=	655,57		658,03	N/mm²
Safety factor for bending stress	S_F	=	17,66		16,92	
Scuffing load capacity						

FIG. 51

490

TEDATA

Program : MDESIGN 2018	User : Kristjan	Customer : Kristjan
Module version : 17.0.5	Date : 05.12.2022	Project :

Bevel-, Hypoid Gear

Mean coefficient of friction	m_B	=	0,2	
Factor for pinion head geometry	X_{BE}	=	0,56	
Angle factor	X_{AB}	=	1,06	
Meshing factor	X_Q	=	1	
Tip relief factor	X_{CA}	=	1	
Overlapping factor	X_ε	=	0,28	
Mass temperature	ϑ_{BI}	=	28,72	°C
Integral temperature	ϑ_{M1}	=	68,84	°C
Scuffing load integral temperature	ϑ_{S50}	=	1,43	°C
Safety factor for scuffing	S_{B50}	=	1,43	

FIG. 52