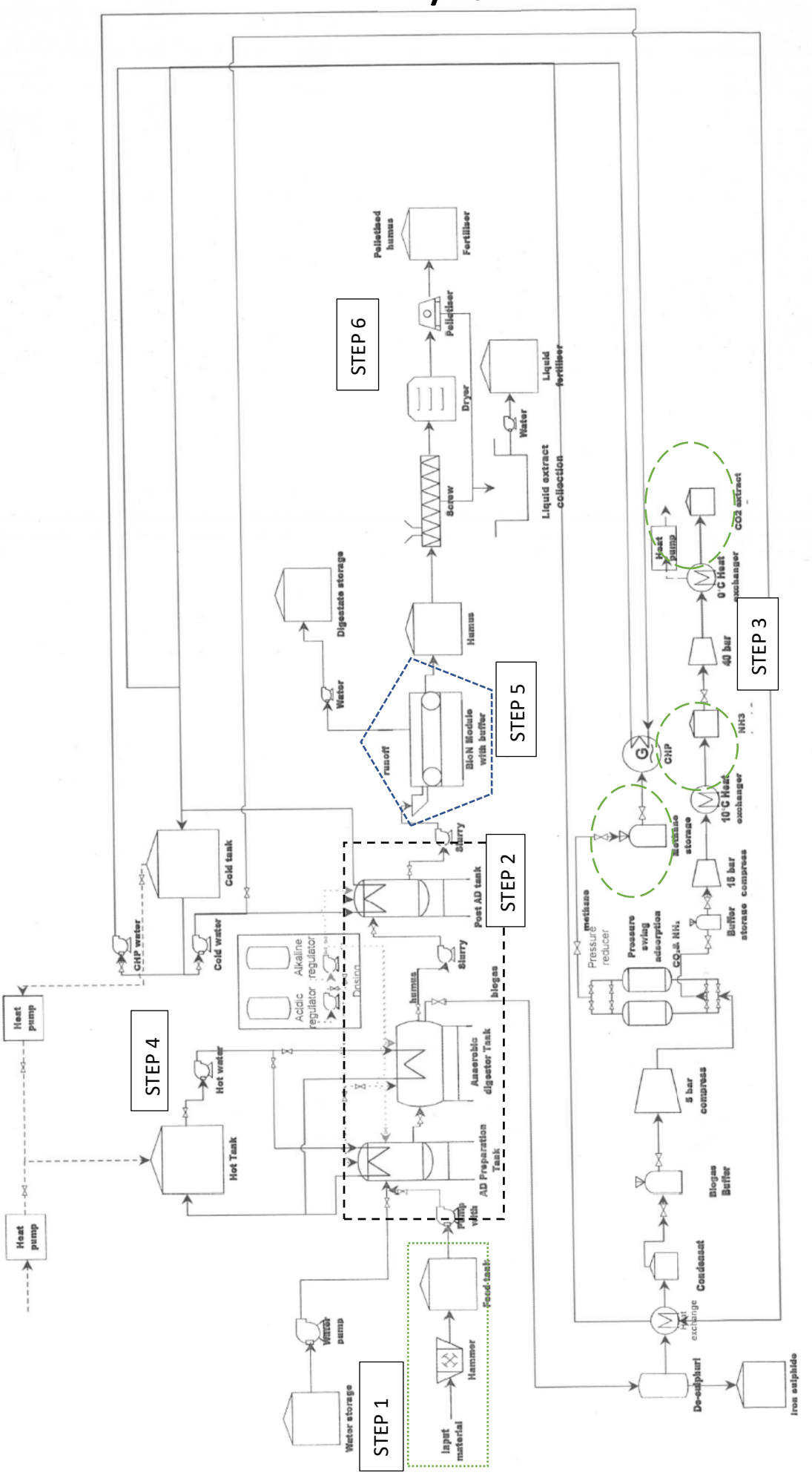
STEP 1
STEP 2
STEP 3
STEP 4
STEP 5
STEP 6
Water storage
Water pump
Input material
Hammer
Feed tank
Pump with
AD Preparation Tank
Anaerobic digestor Tank
Hot Tank
Hot water
Heat pump
Heat pump
GHP water
Cold tank
Cold water
Alkaline regulator
Acidic regulator
Desorption
Post AD tank
Slurry
Slurry
humus
biogas
Digestate storage
Water
BioN Module with buffer
runoff
Humus
Screw
Dryer
Pelletiser
Pelletised humus
Fertiliser
Liquid extract collection
Water
Liquid fertiliser
Heat pump
0°C Heat exchanger
CO2 extract
40 bar
NH3
10°C Heat exchanger
CHP
Methane storage
Pressure reducer
methane
Pressure swing adsorption
CO2& NH3
Buffer storage
18 bar compress
5 bar compress
Biogas Buffer
Condensat
Heat exchange
De-sulphuri
Iron sulphide

FIGURE 1

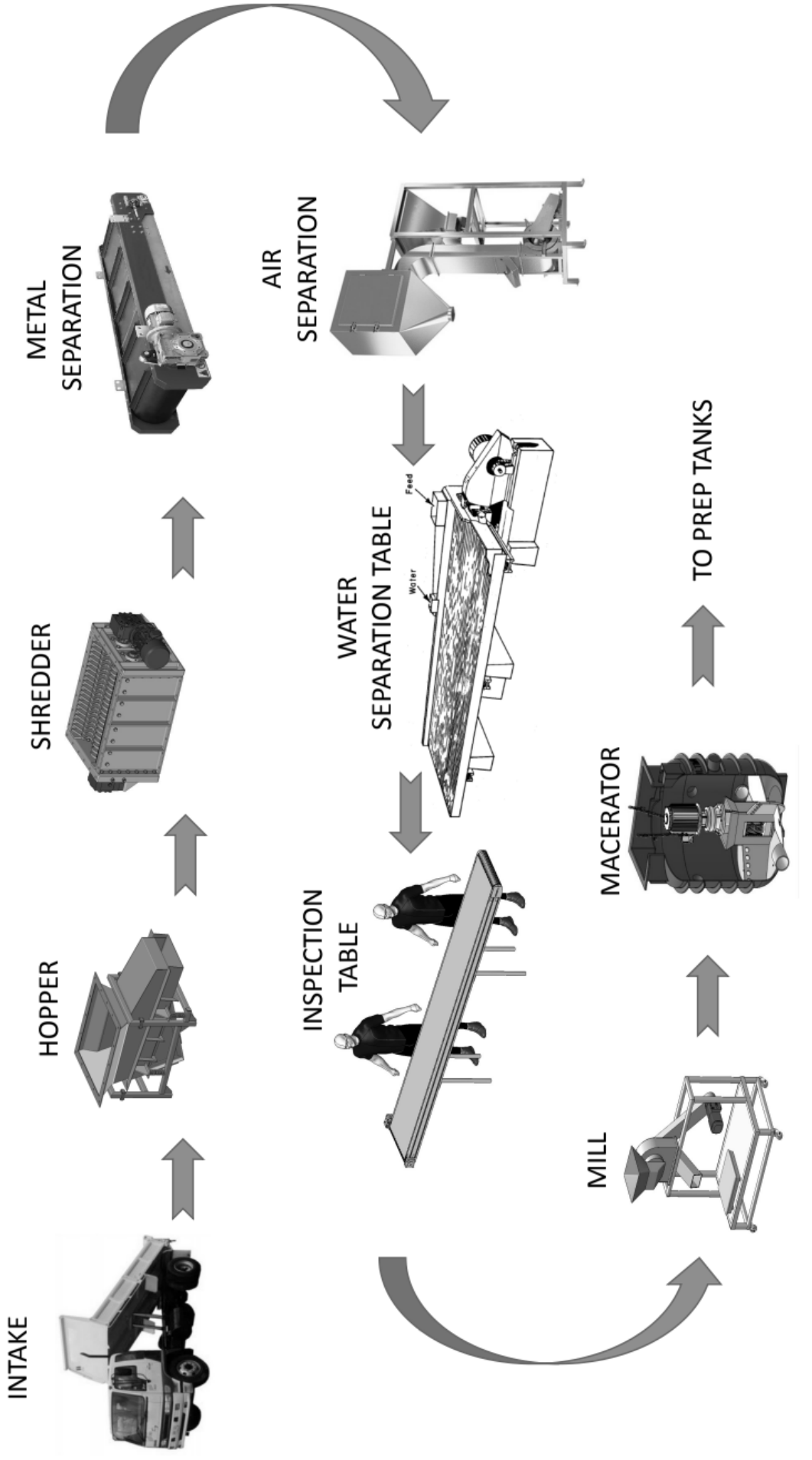
INTAKE
HOPPER
SHREDDER
METAL SEPARATION
AIR SEPARATION
WATER SEPARATION TABLE
Feed
Water
INSPECTION TABLE
MACERATOR
MILL
TO PREP TANKS

FIGURE 2

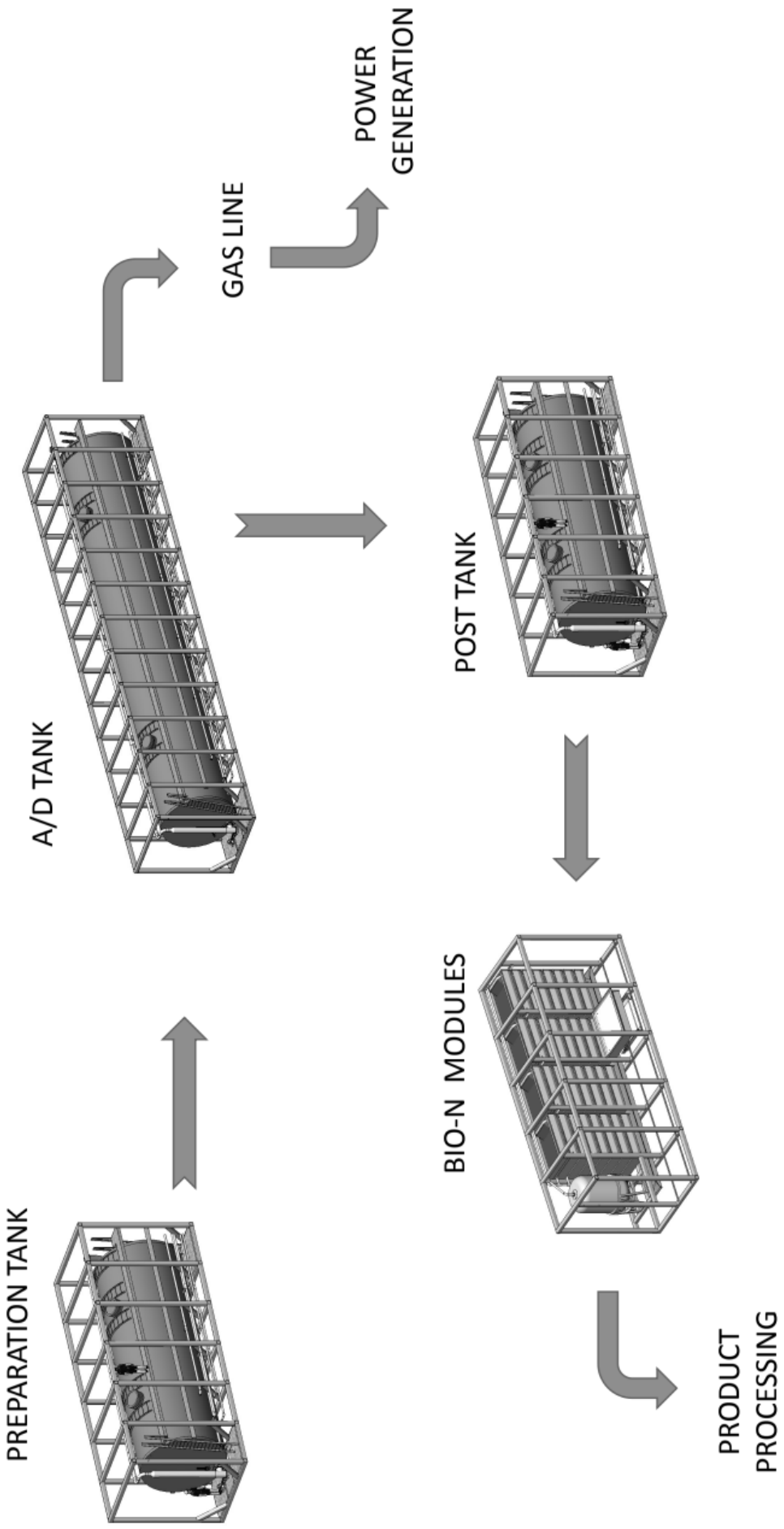
PREPARATION TANK
A/D TANK
GAS LINE
POWER GENERATION
POST TANK
BIO-N MODULES
PRODUCT PROCESSING

FIGURE 3

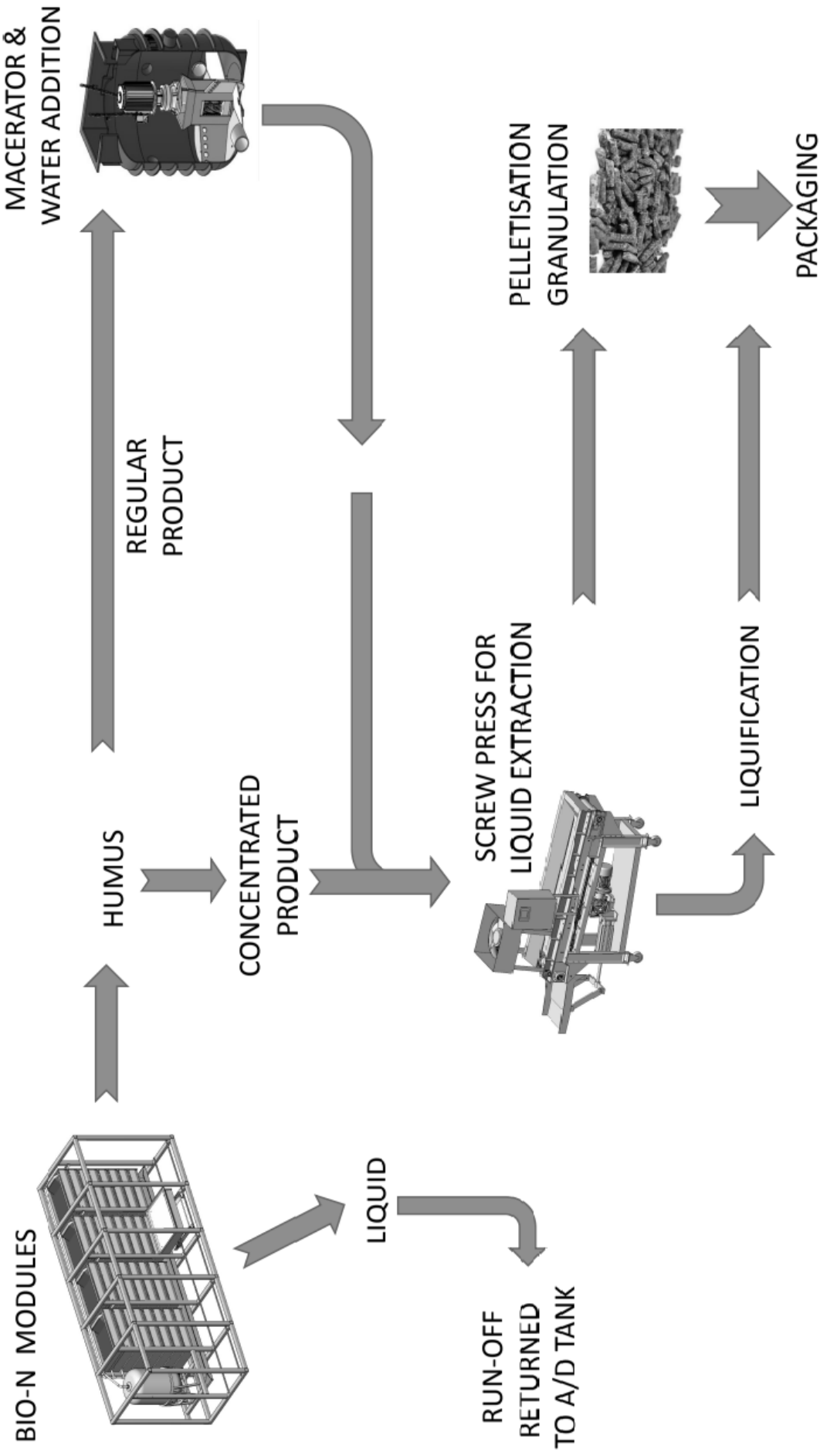
BIO-N MODULES
LIQUID
RUN-OFF RETURNED TO A/D TANK
HUMUS
MACERATOR & WATER ADDITION
REGULAR PRODUCT
CONCENTRATED PRODUCT
SCREW PRESS FOR LIQUID EXTRACTION
LIQUIFICATION
PELLETISATION GRANULATION
PACKAGING

FIGURE 4

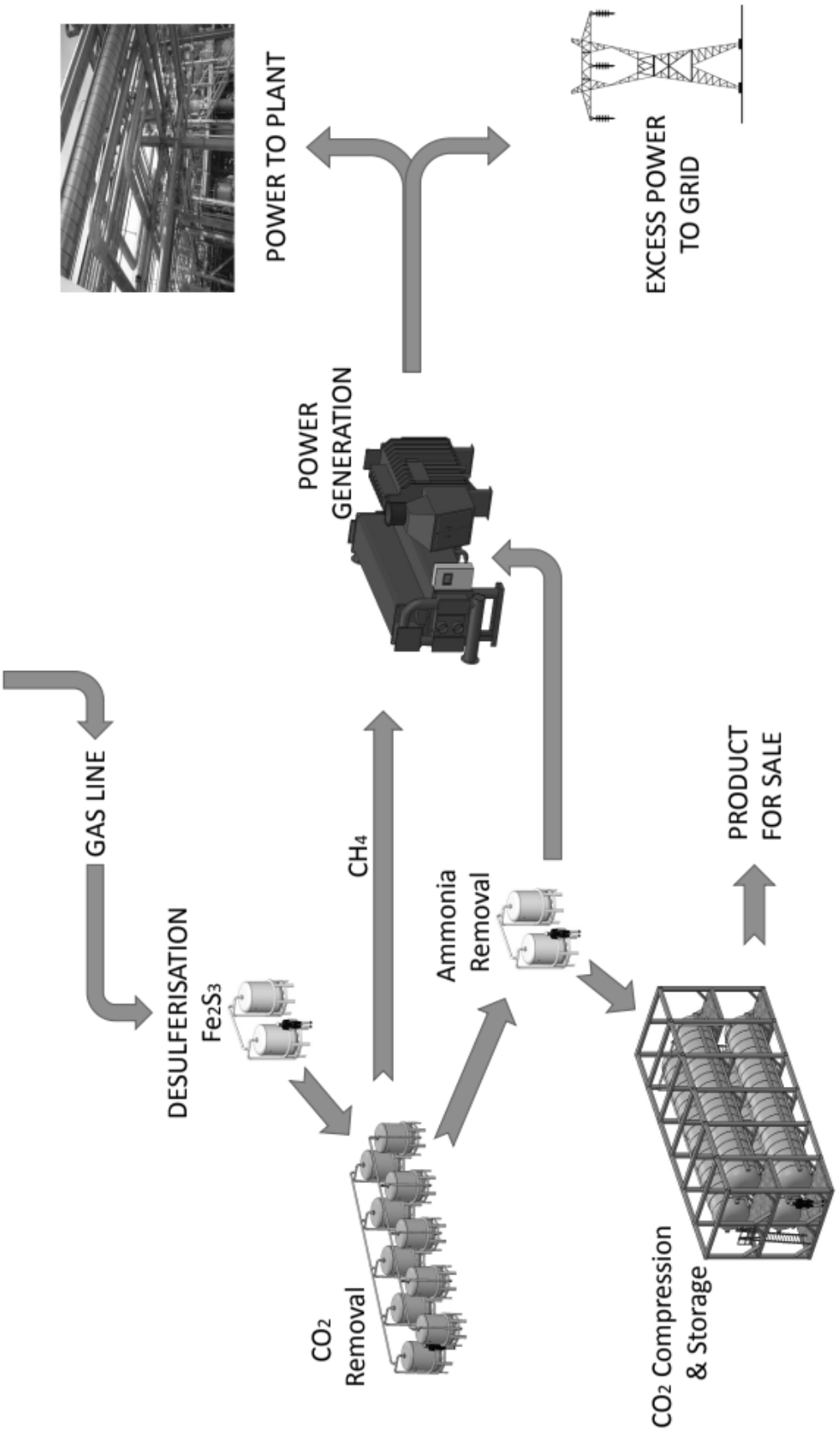
GAS LINE
DESULFERISATION
Fe2S3
CO2
Removal
CH4
Ammonia
Removal
POWER
GENERATION
POWER TO PLANT
EXCESS POWER
TO GRID
PRODUCT
FOR SALE
CO2 Compression
& Storage

FIGURE 5

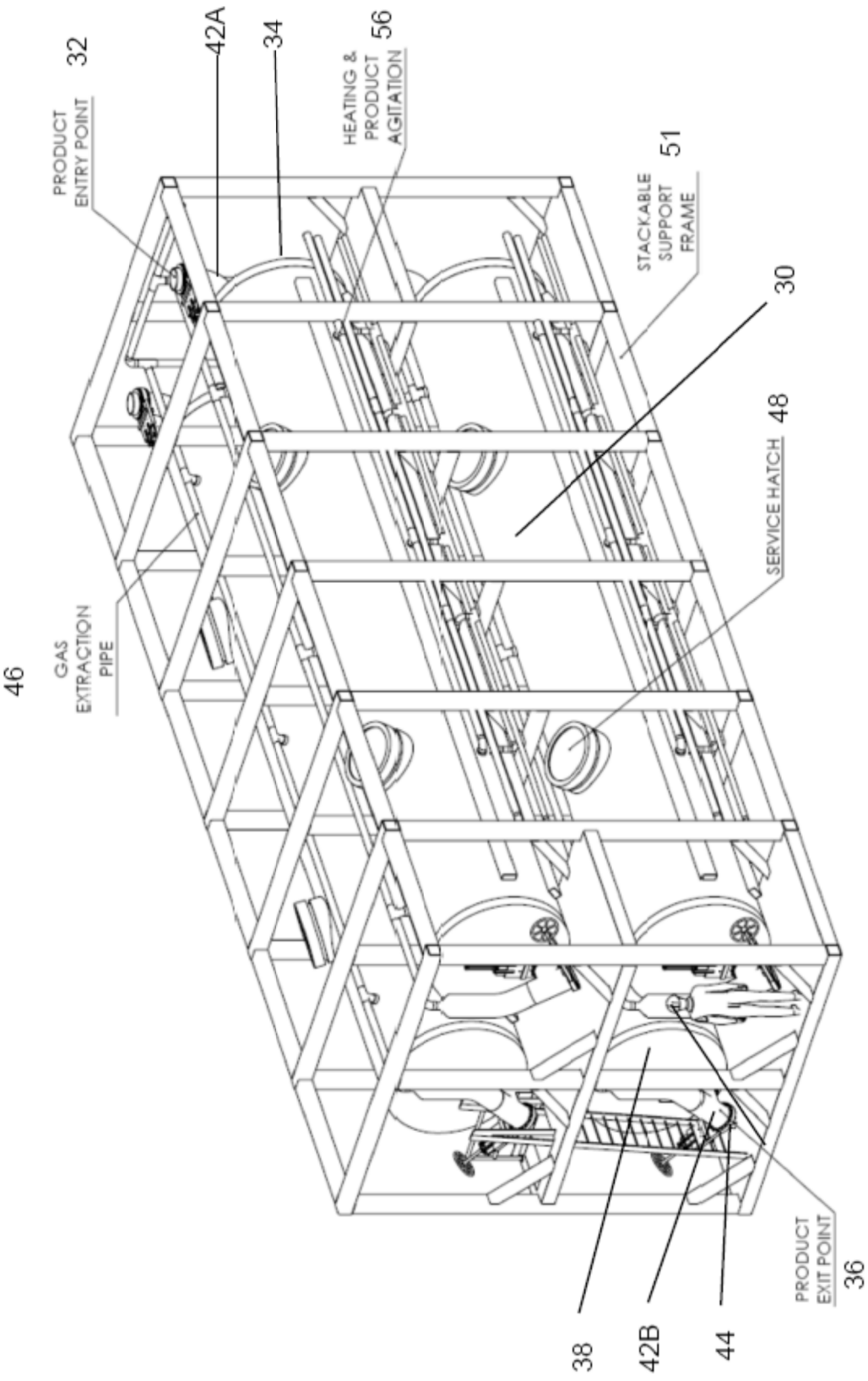
46
GAS EXTRACTION PIPE
PRODUCT ENTRY POINT
32
42A
34
HEATING & PRODUCT AGITATION
56
STACKABLE SUPPORT FRAME
51
30
SERVICE HATCH
48
PRODUCT EXIT POINT
36
38
42B
44

FIGURE 6

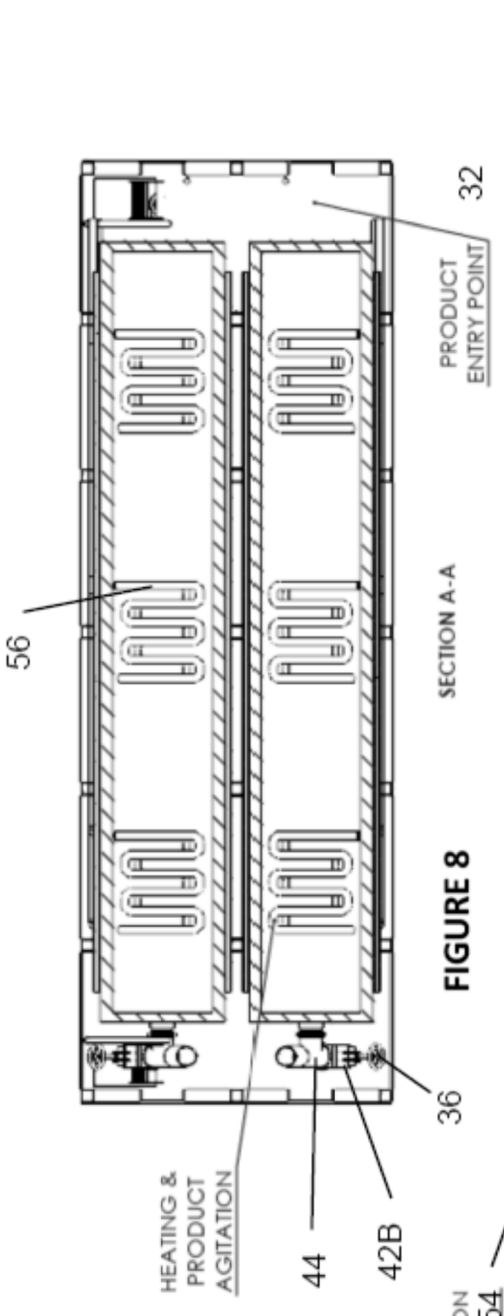

FIGURE 8

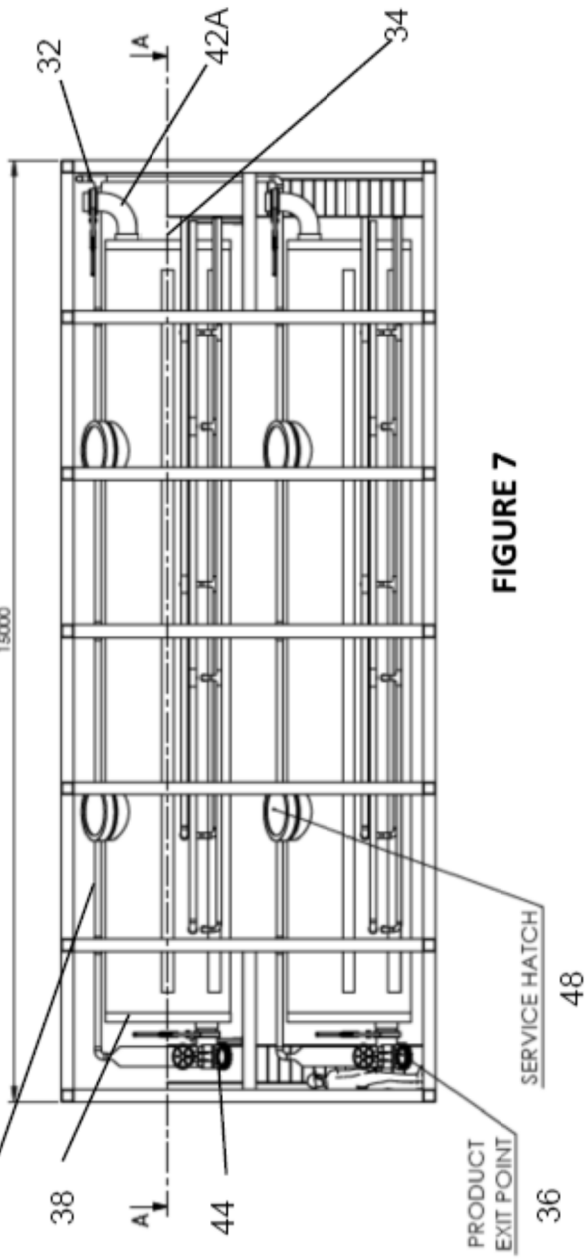

FIGURE 7

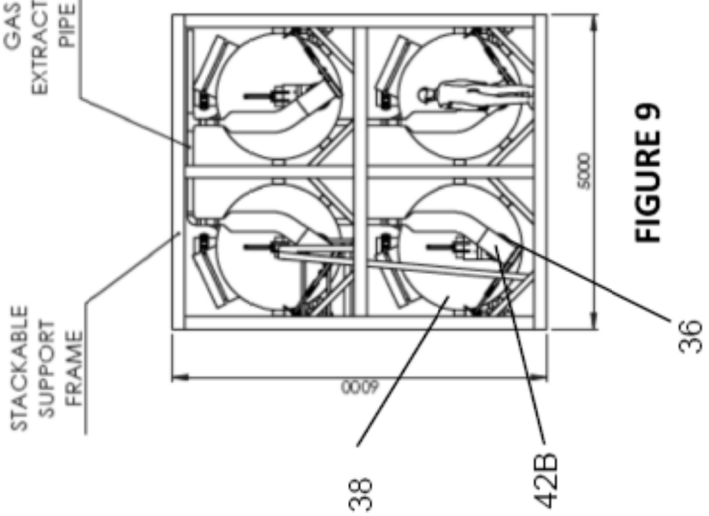

FIGURE 9

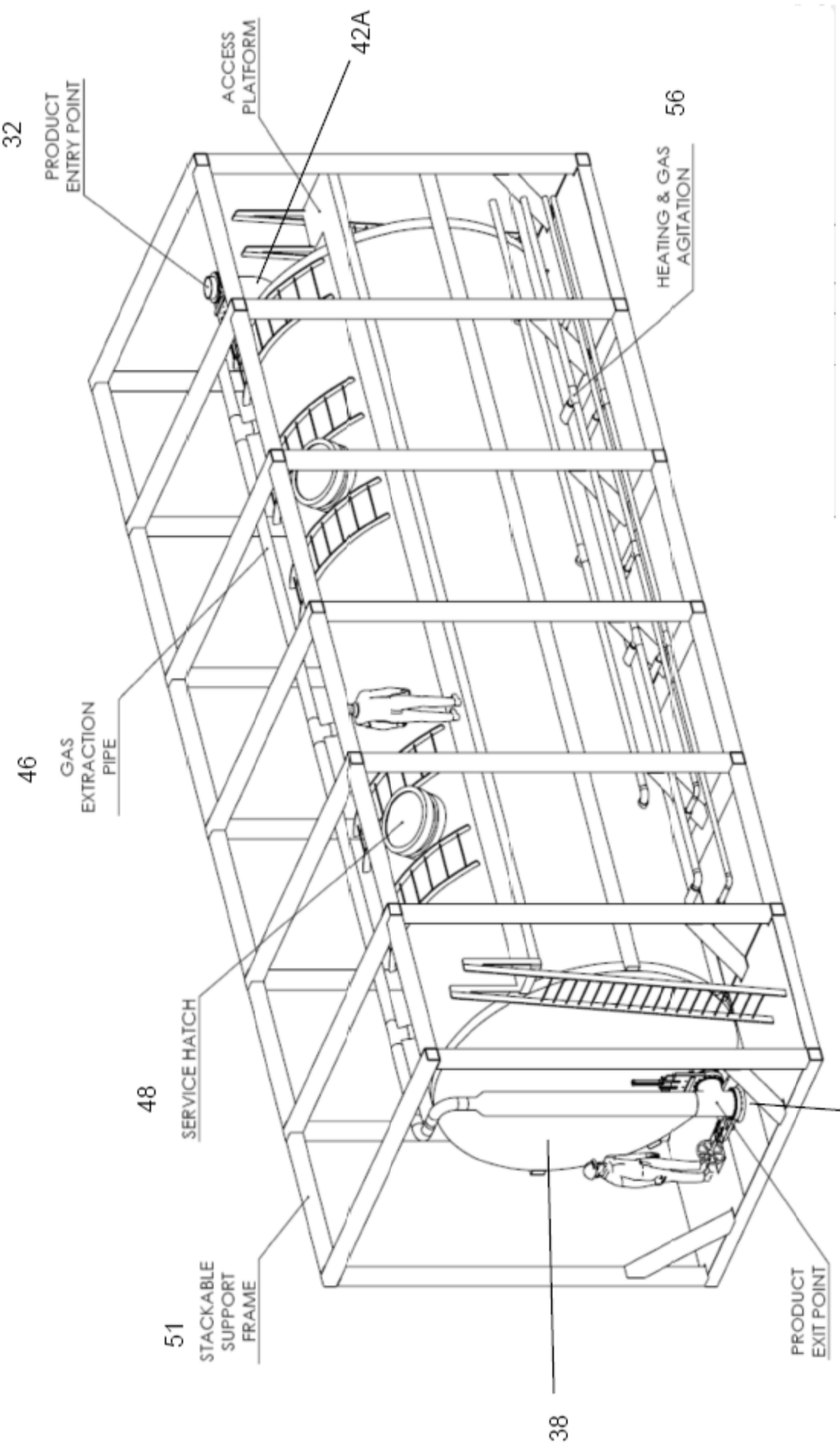
32
PRODUCT ENTRY POINT
ACCESS PLATFORM
42A
56
HEATING & GAS AGITATION
46
GAS EXTRACTION PIPE
48
SERVICE HATCH
36
51
STACKABLE SUPPORT FRAME
38
PRODUCT EXIT POINT
44

FIGURE 10

ANAEROBIC DIGESTION
TANK MODULE

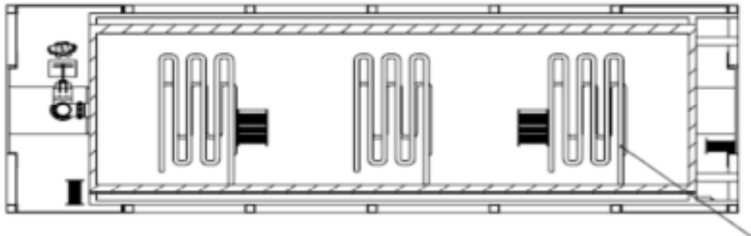

SECTION A-A

FIGURE 13

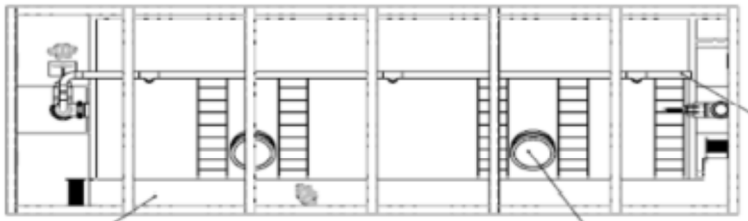

FIGURE 12

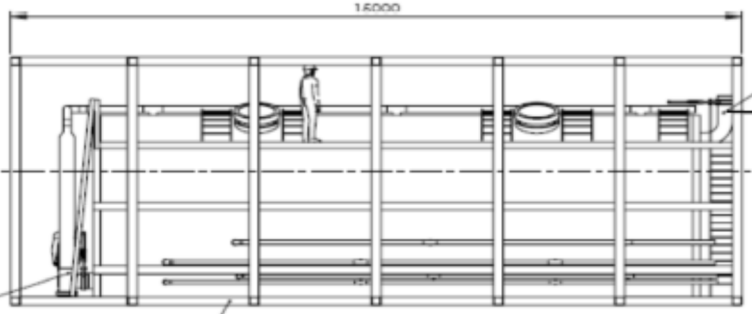

FIGURE 11

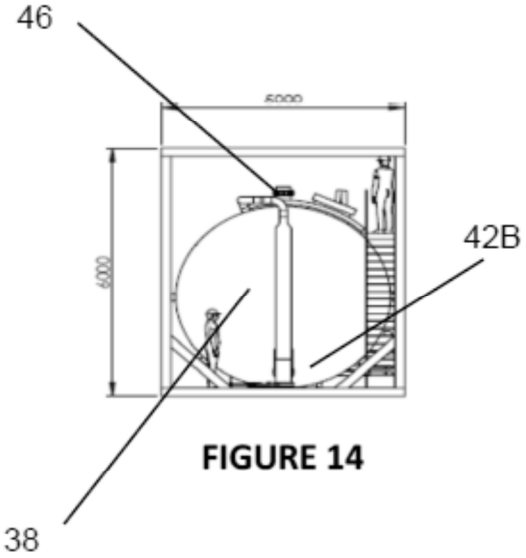

FIGURE 14

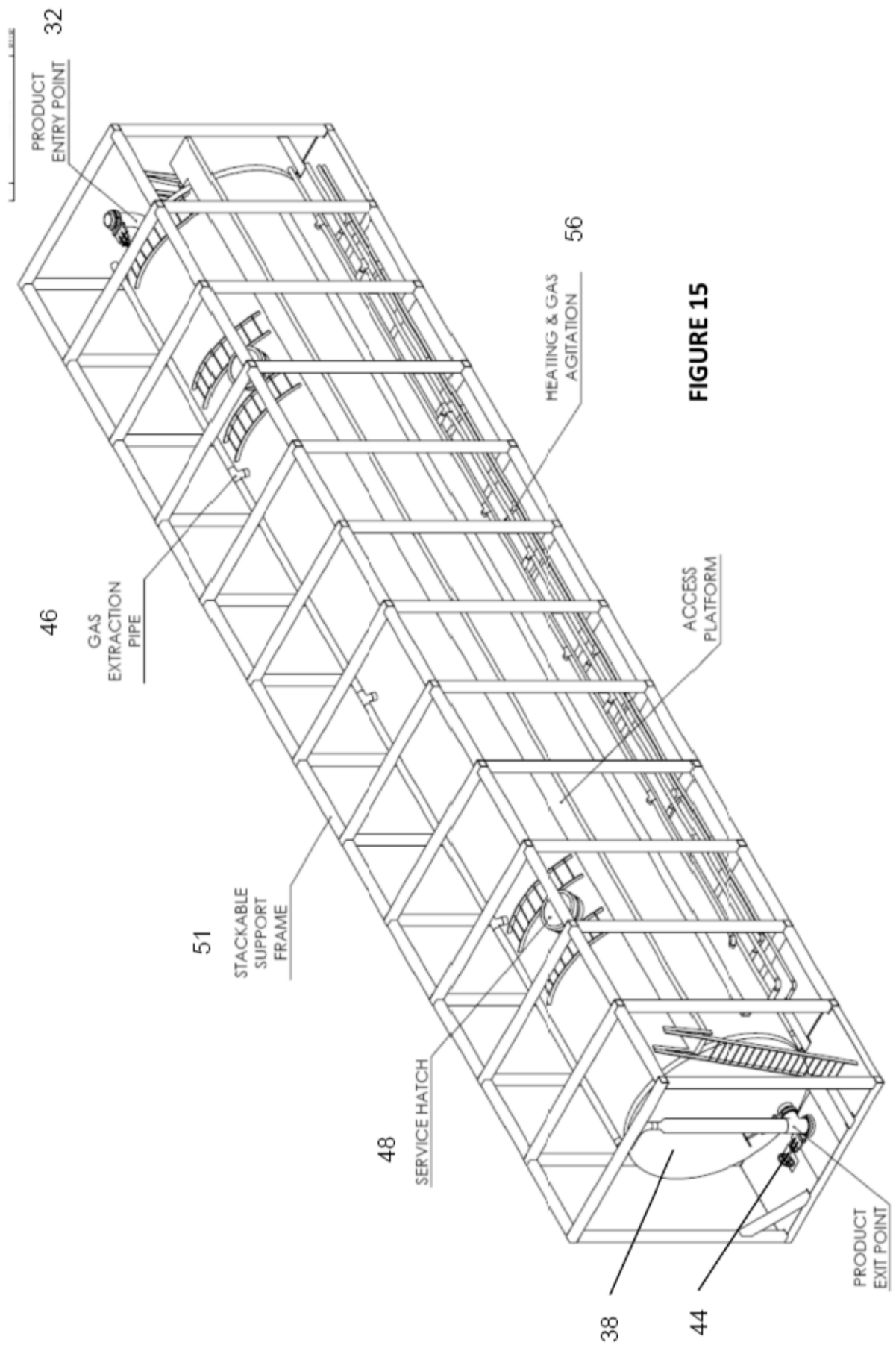
32
PRODUCT ENTRY POINT
56
HEATING & GAS AGITATION
46
GAS EXTRACTION PIPE
ACCESS PLATFORM
51
STACKABLE SUPPORT FRAME
48
SERVICE HATCH
38
44
PRODUCT EXIT POINT
36

FIGURE 15

ANAEROBIC DIGESTION
TANK MODULE

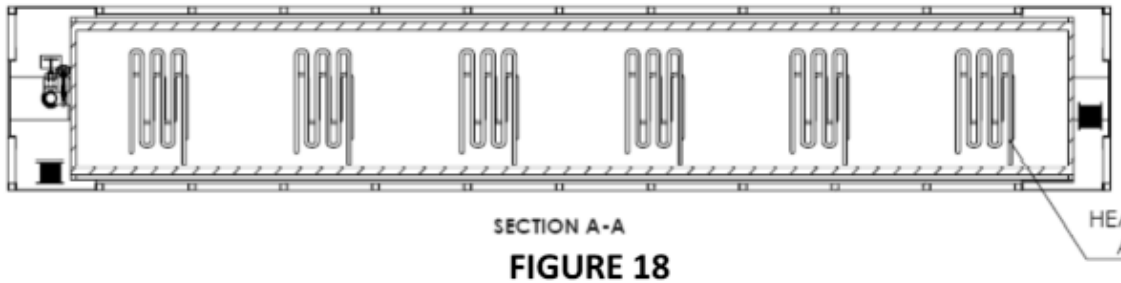

FIGURE 18

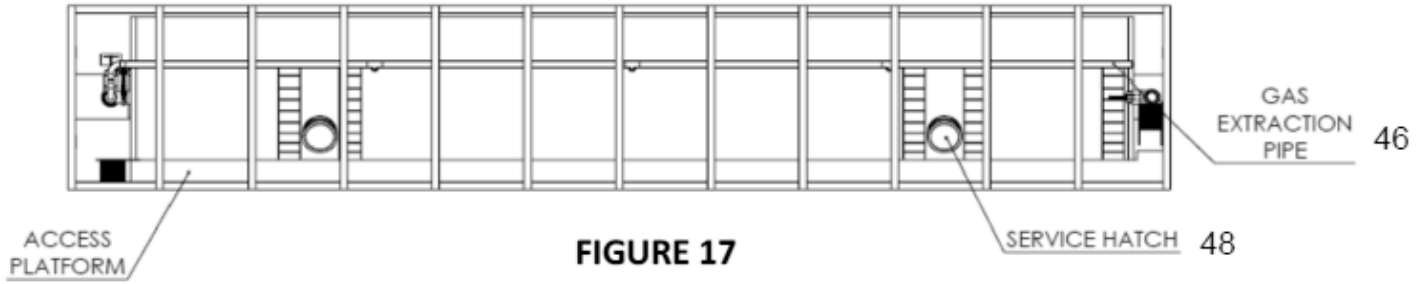

FIGURE 17

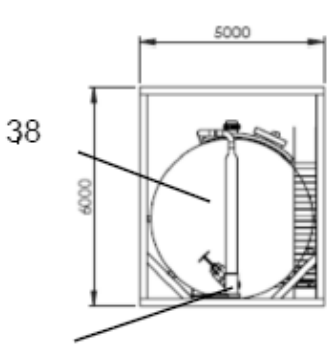

FIGURE 19

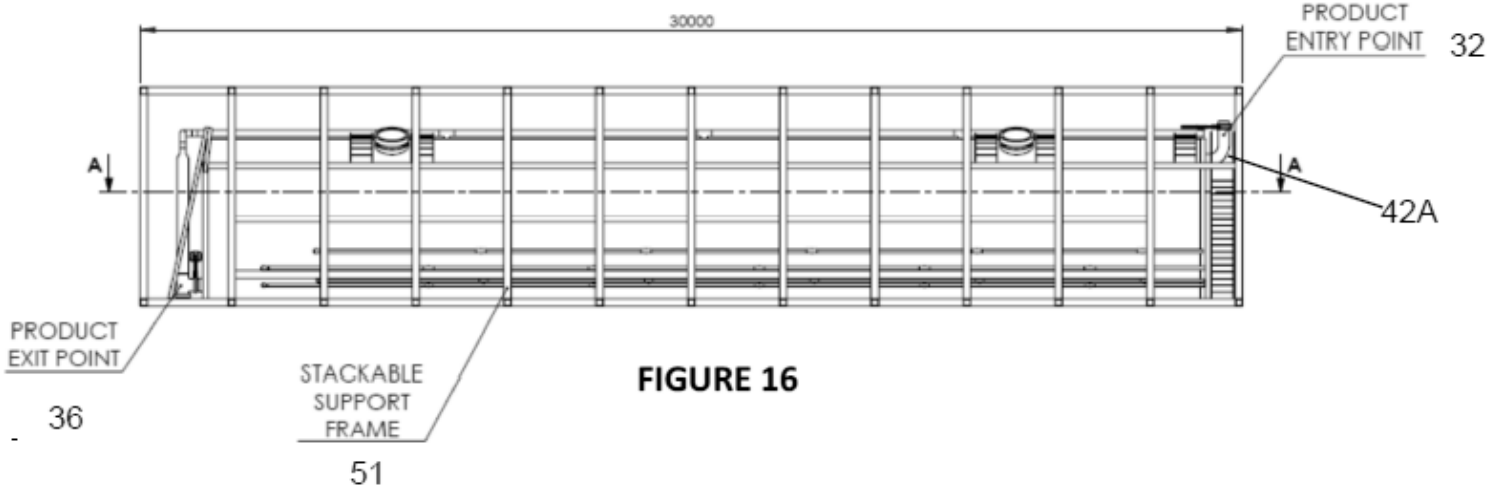

FIGURE 16

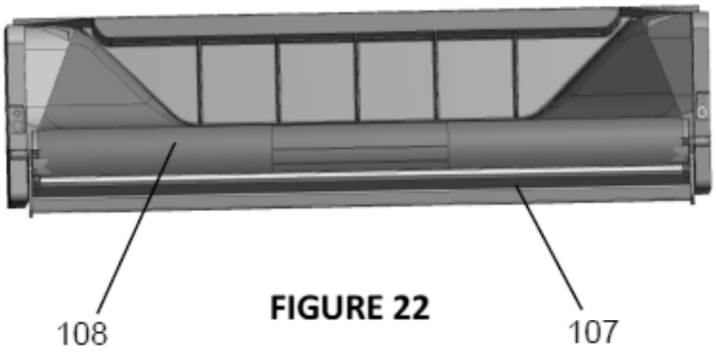

FIGURE 22

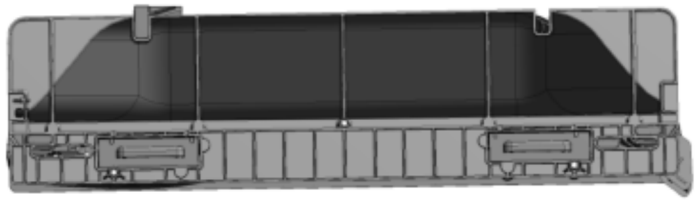

FIGURE 23

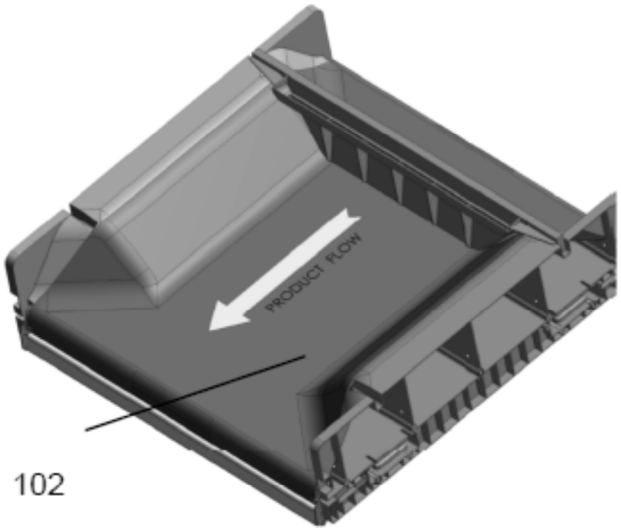

FIGURE 20

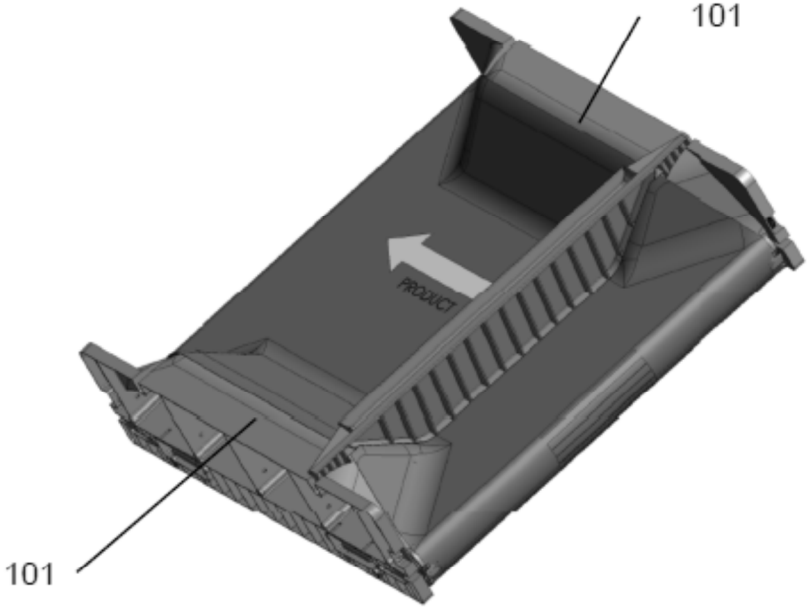

FIGURE 21

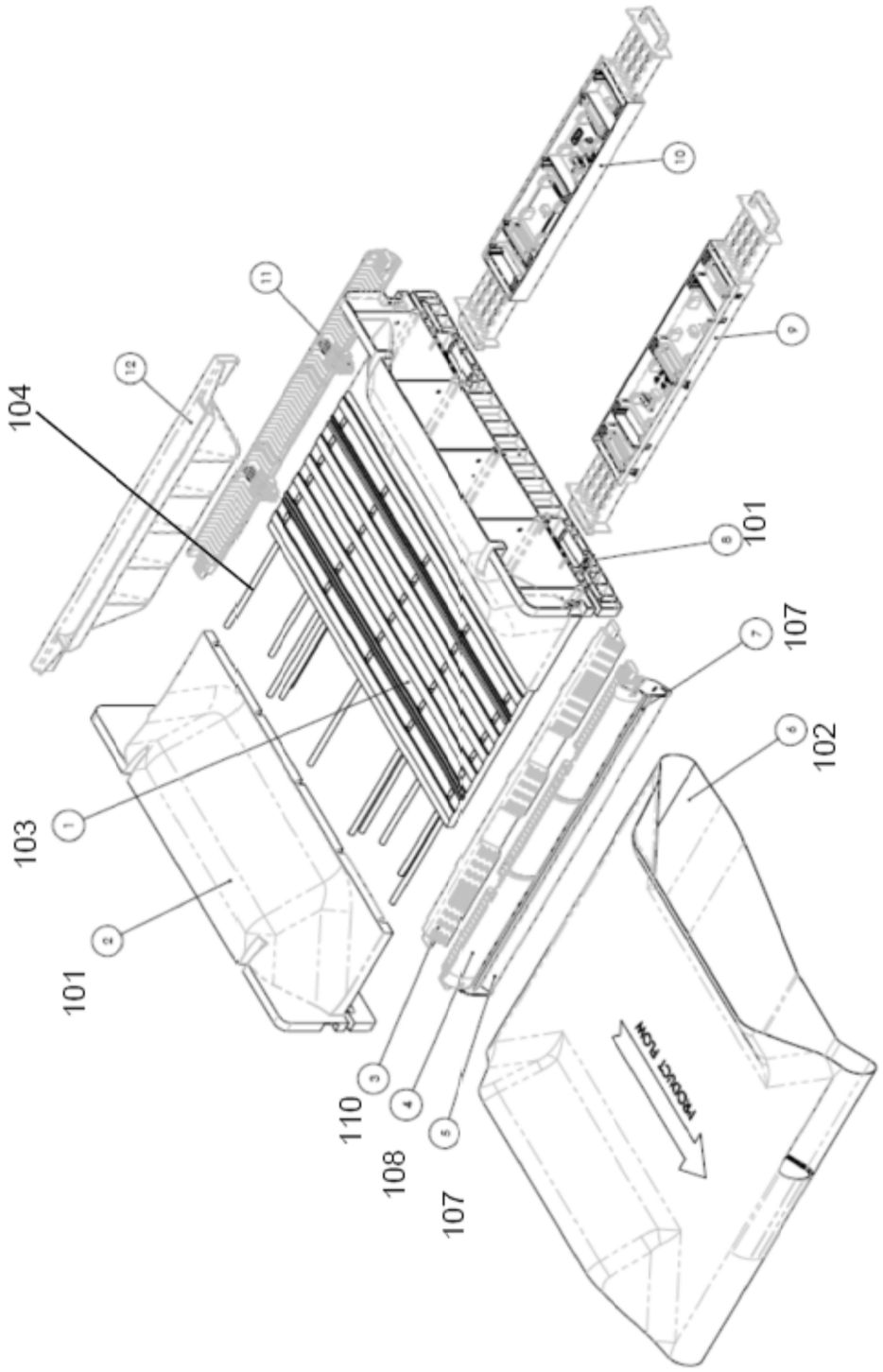

FIGURE 24

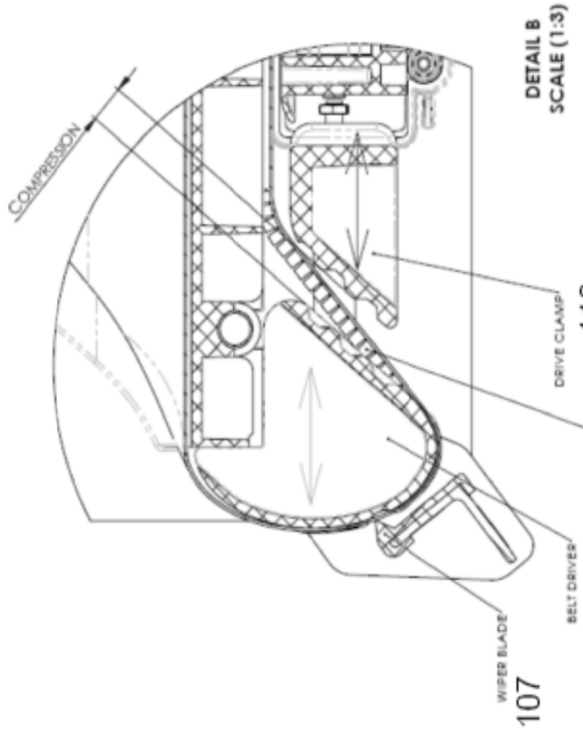

FIGURE 28

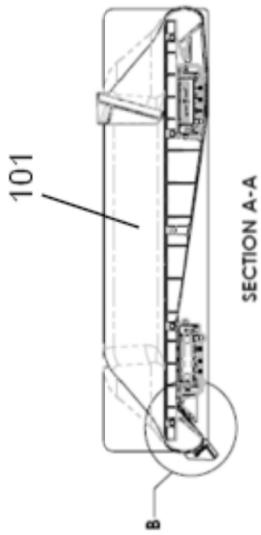

FIGURE 27

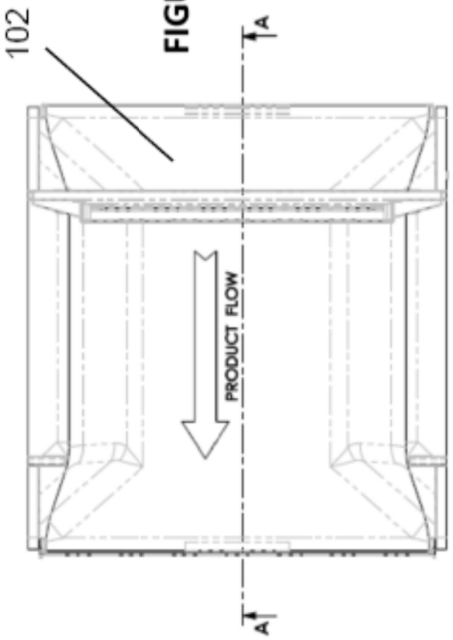

FIGURE 25

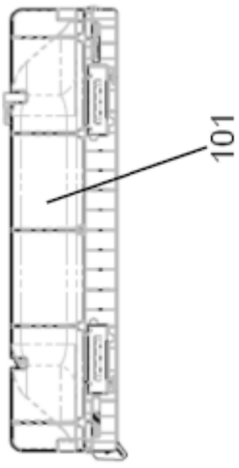

FIGURE 26

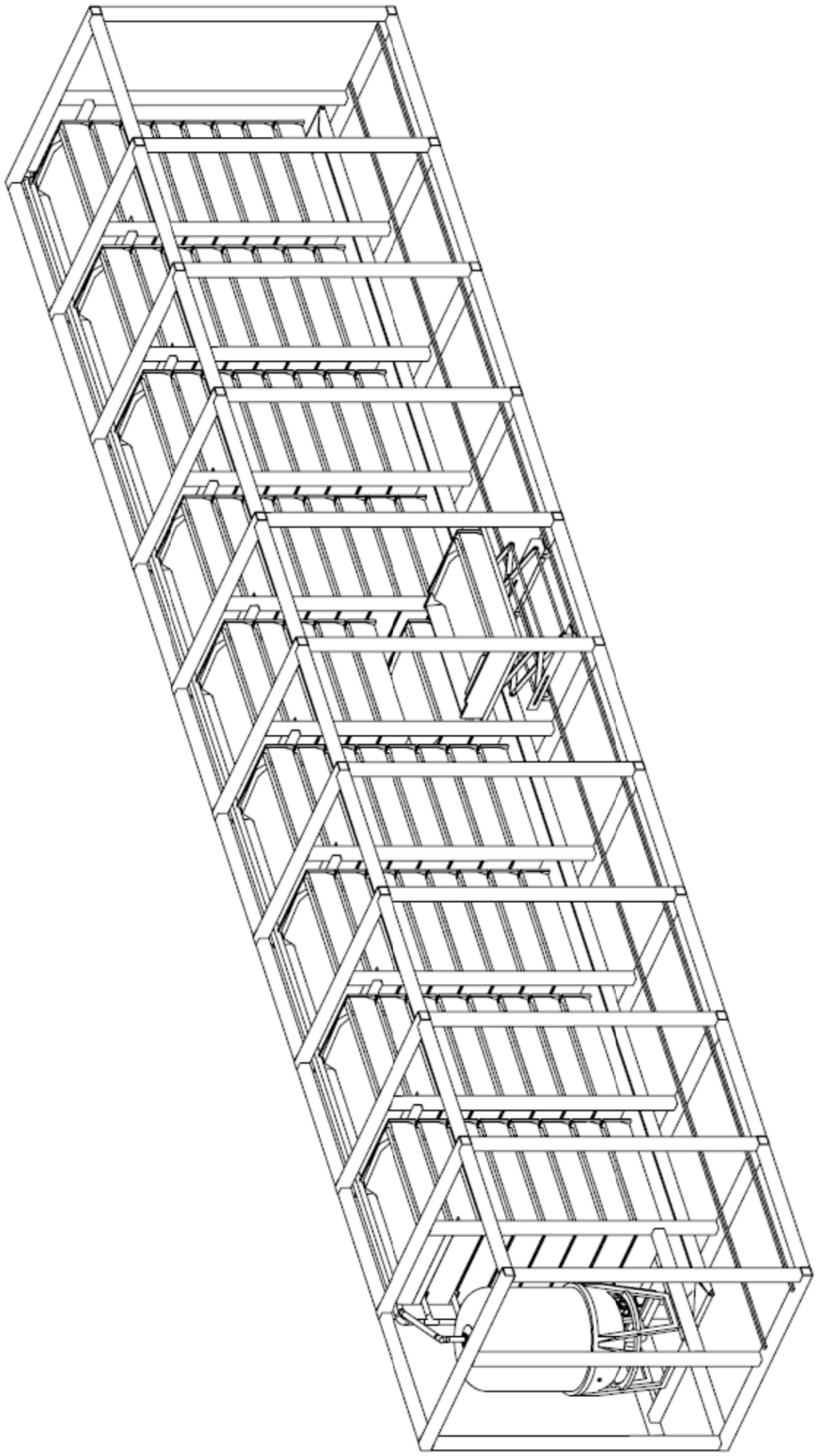

FIGURE 29

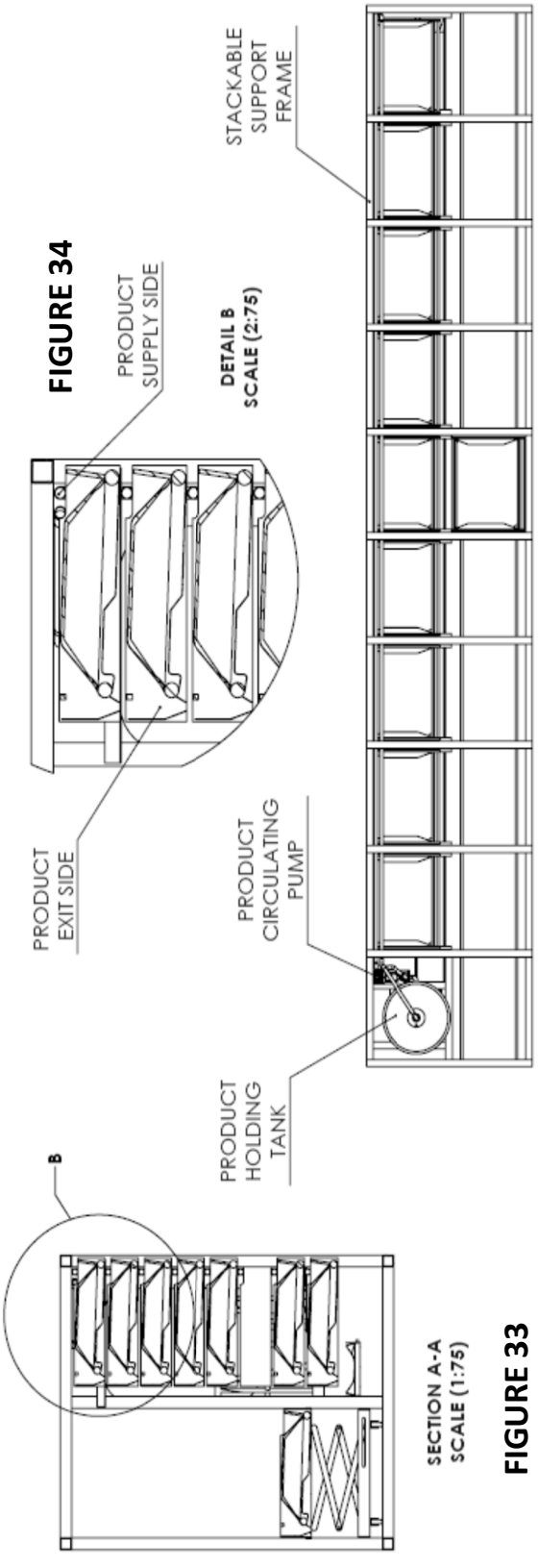

FIGURE 33

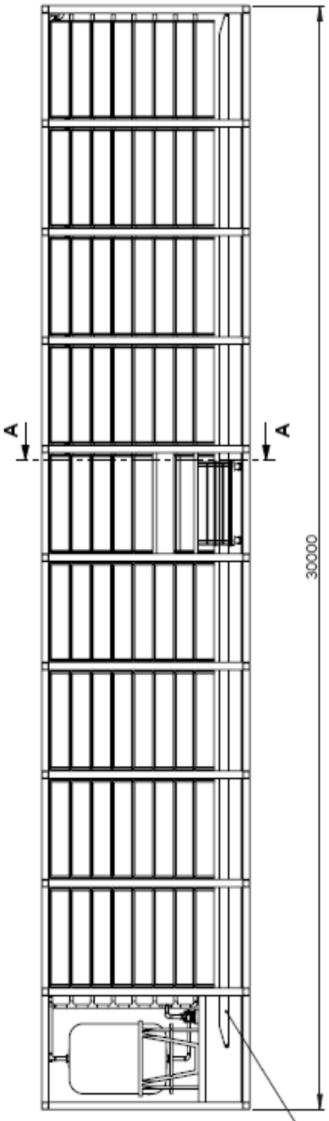

FIGURE 31

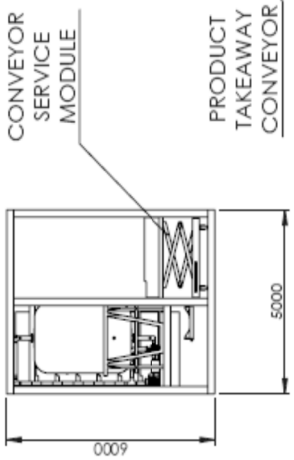

FIGURE 30

FIGURE 34

FIGURE 32