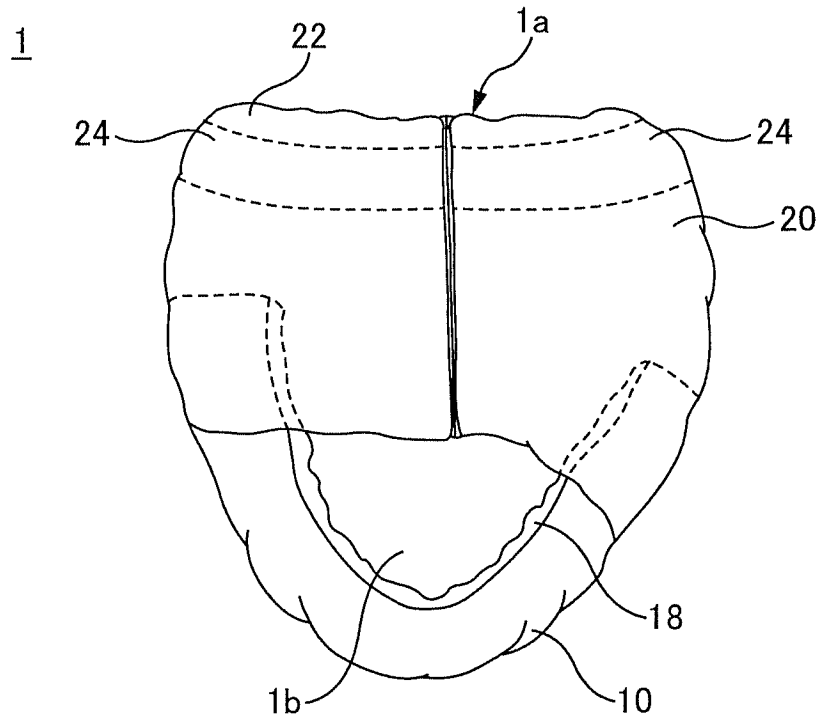

FIG. 1A

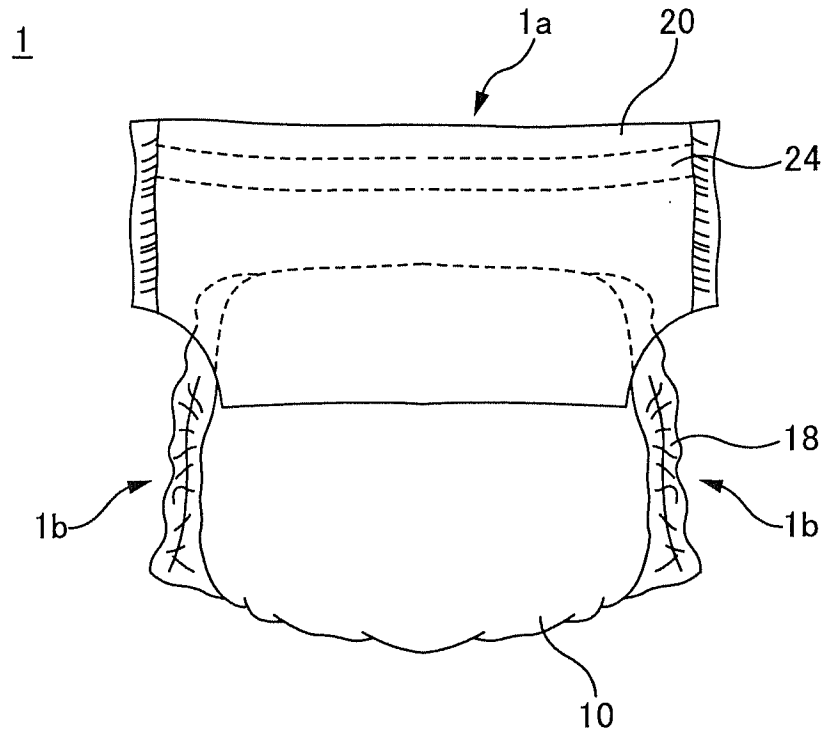

FIG. 1B

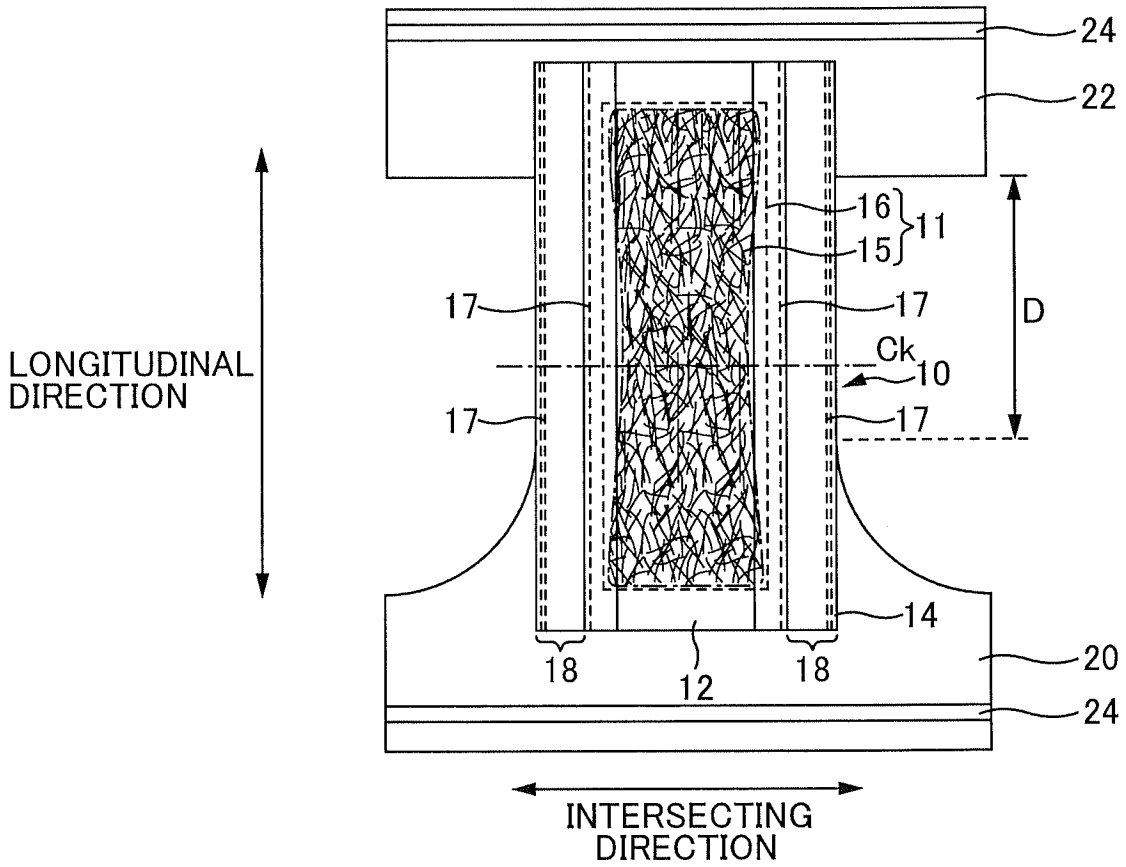
LONGITUDINAL DIRECTION
24
22
16
15
11
D
17
17
Ck
10
17
17
14
18
12
18
20
24
INTERSECTING DIRECTION

FIG. 1C

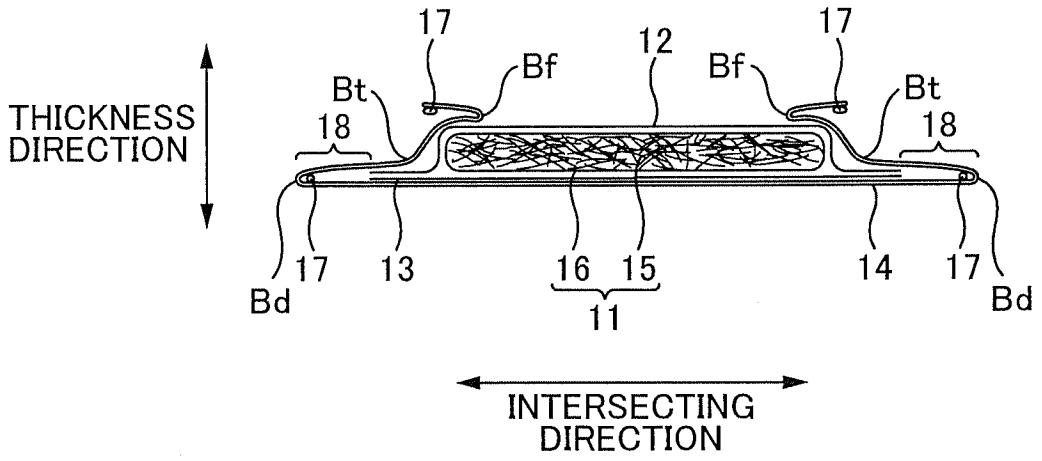
THICKNESS DIRECTION
17
Bf
12
Bf
17
Bt
Bt
18
18
Bd
17
13
16
15
14
17
Bd
11
INTERSECTING DIRECTION

FIG. 2

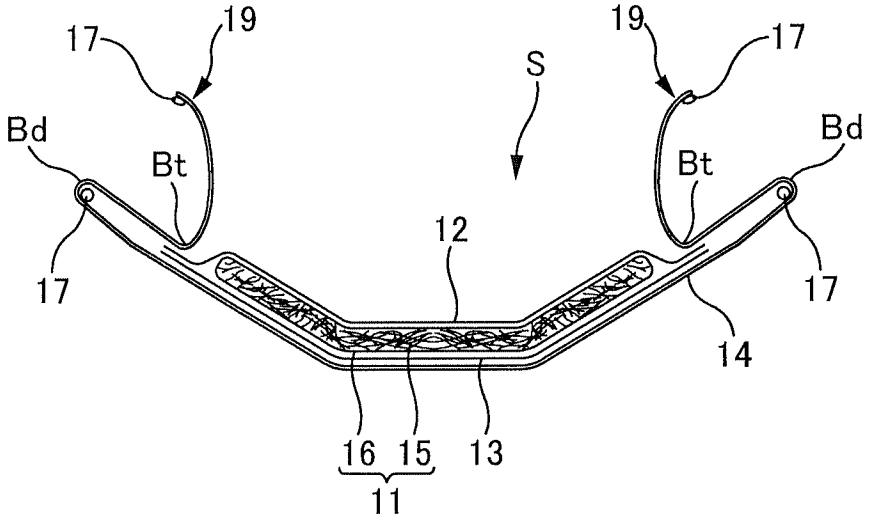
17
19
S
19
17
Bd
Bt
Bt
Bd
12
17
17
14
16
15
13
11

FIG. 3

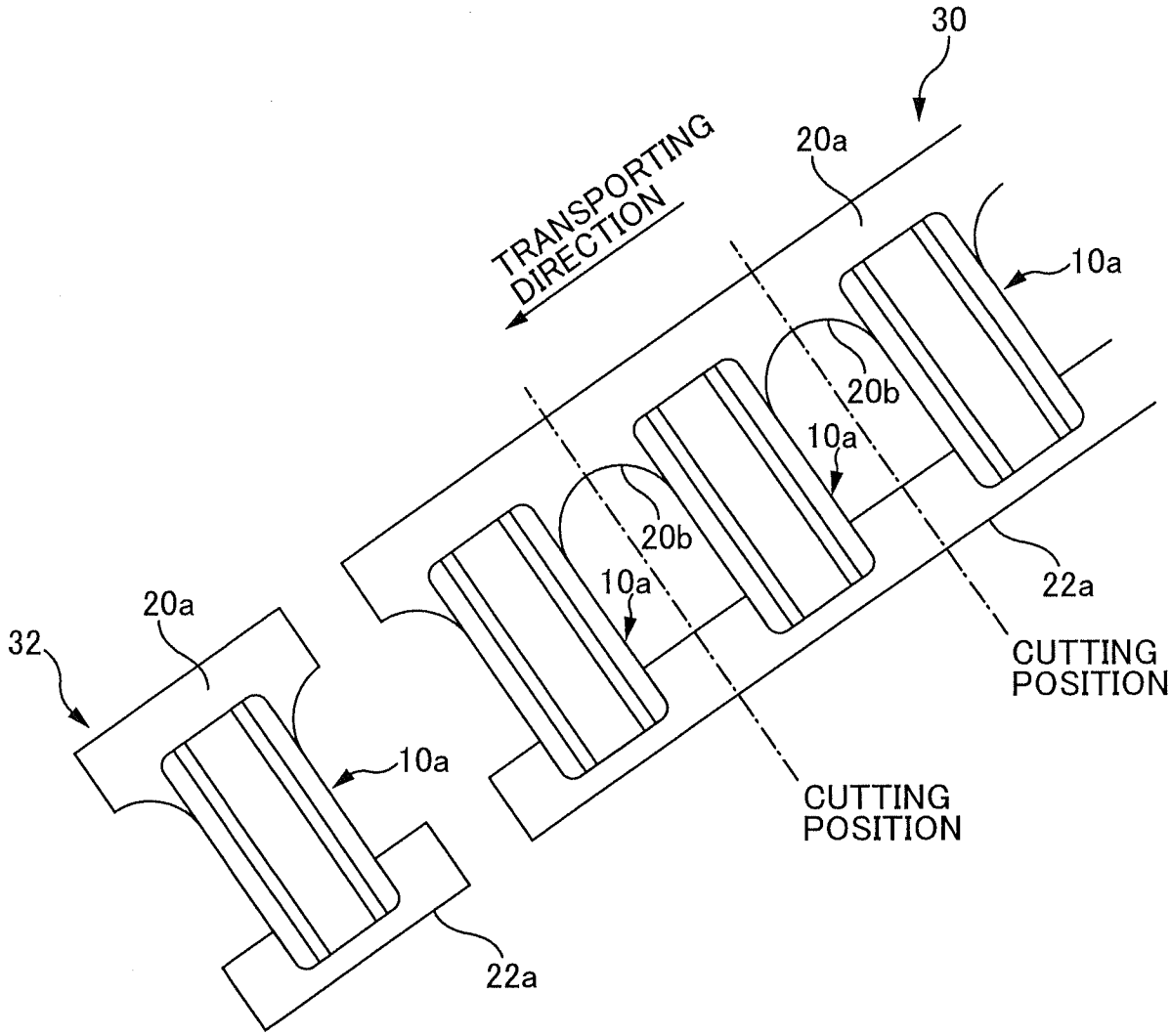
30
TRANSPORTING DIRECTION
20a
10a
20b
10a
20b
10a
22a
CUTTING POSITION
CUTTING POSITION
32
20a
10a
22a

FIG. 4

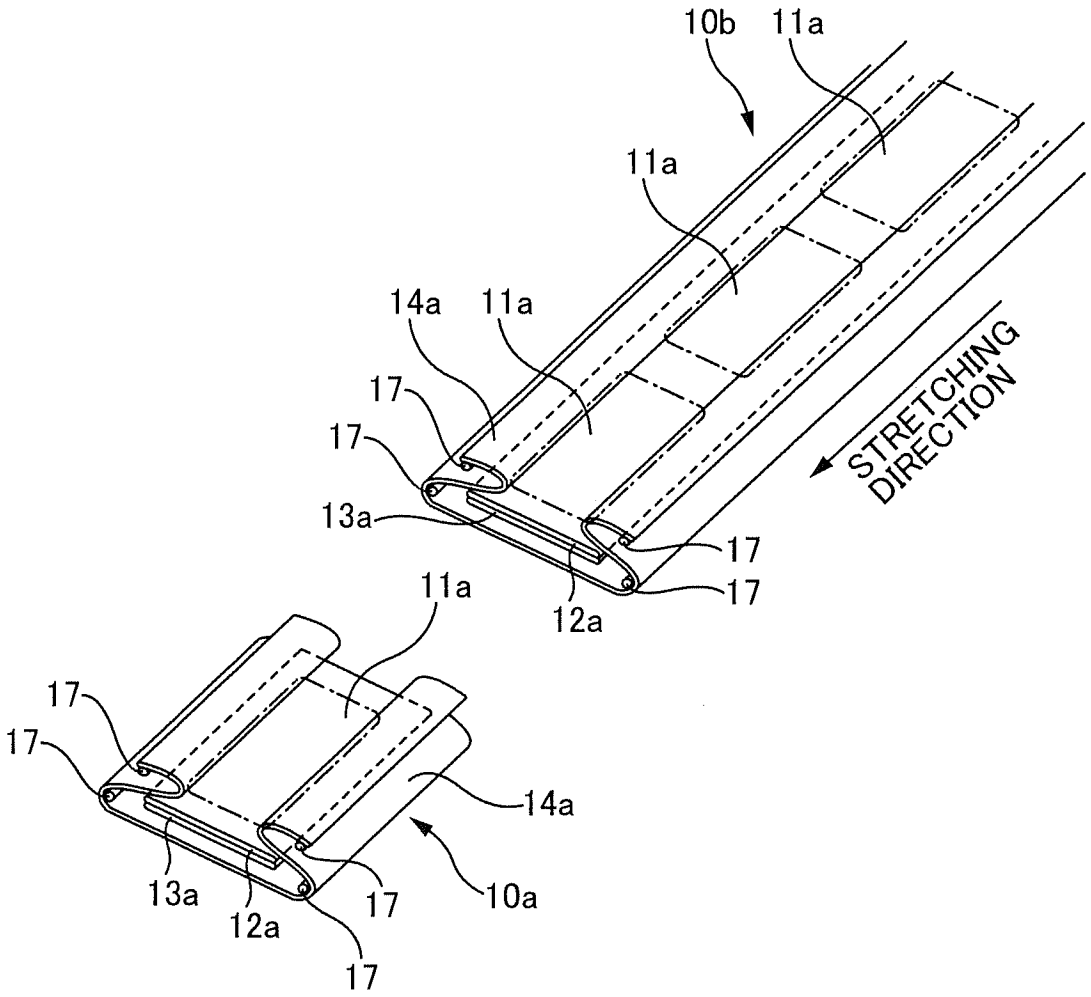
10b
11a
11a
14a
11a
17
17
13a
17
17
12a
STRETCHING DIRECTION
11a
17
17
14a
13a
12a
17
10a
17

FIG. 5A

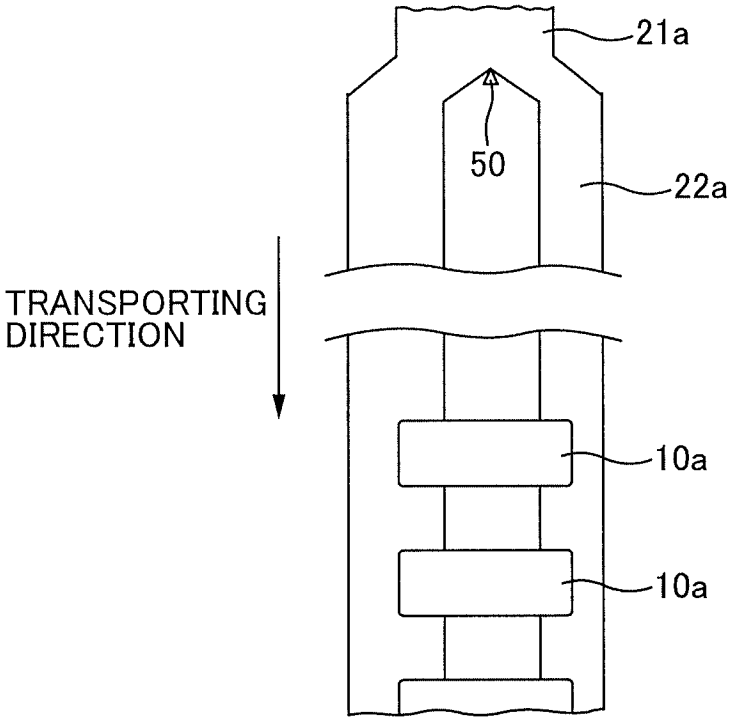
21a
50
22a
TRANSPORTING
DIRECTION
10a
10a

FIG. 5B

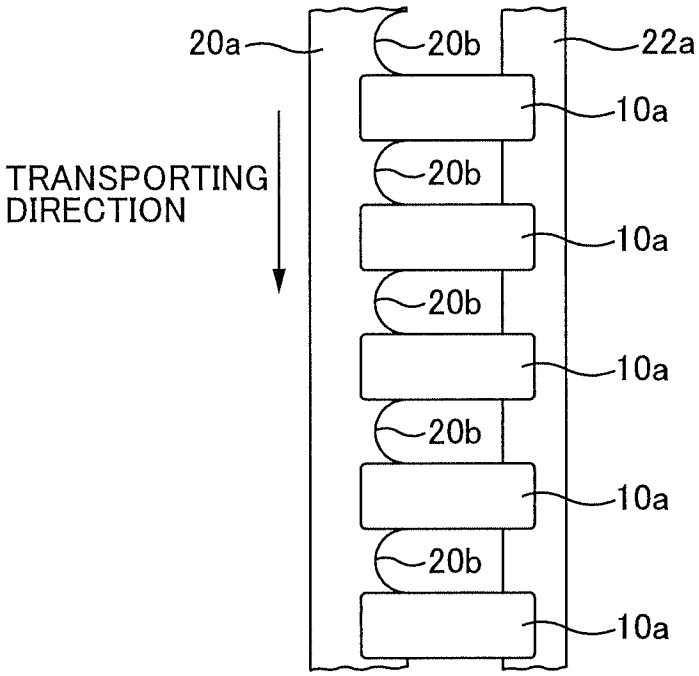
20a
20b
22a
10a
TRANSPORTING
DIRECTION
20b
10a
20b
10a
20b
10a
20b
10a

FIG. 5C

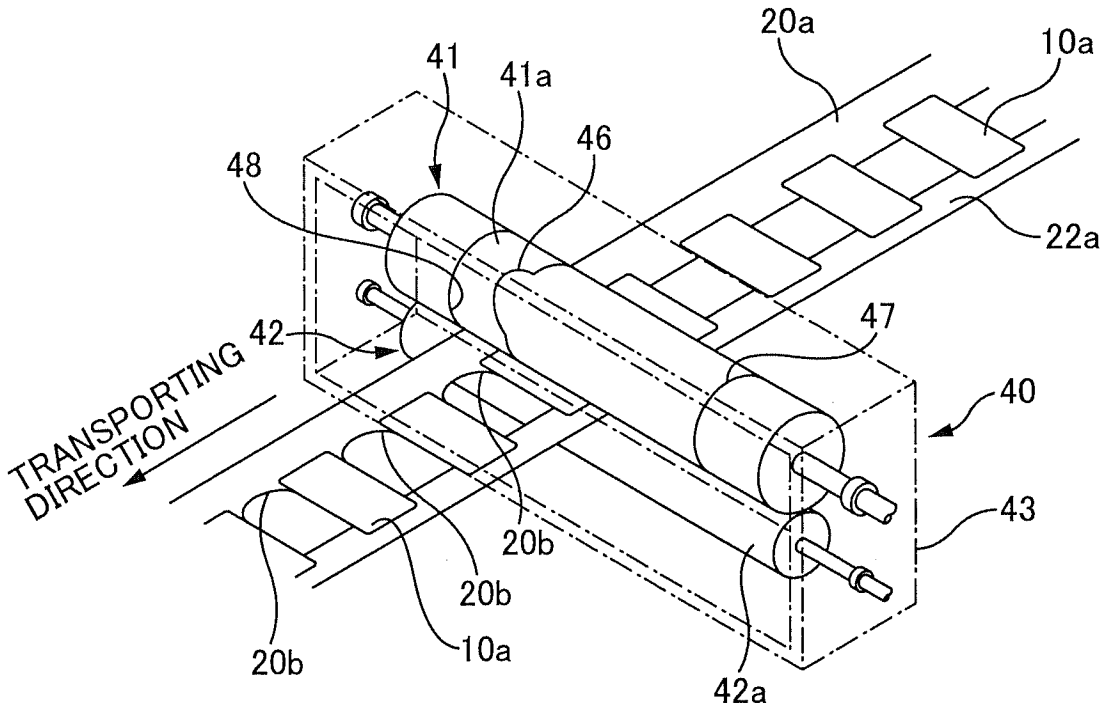
20a
10a
41
41a
46
48
22a
47
42
40
TRANSPORTING DIRECTION
43
20b
20b
20b
10a
42a

FIG. 6

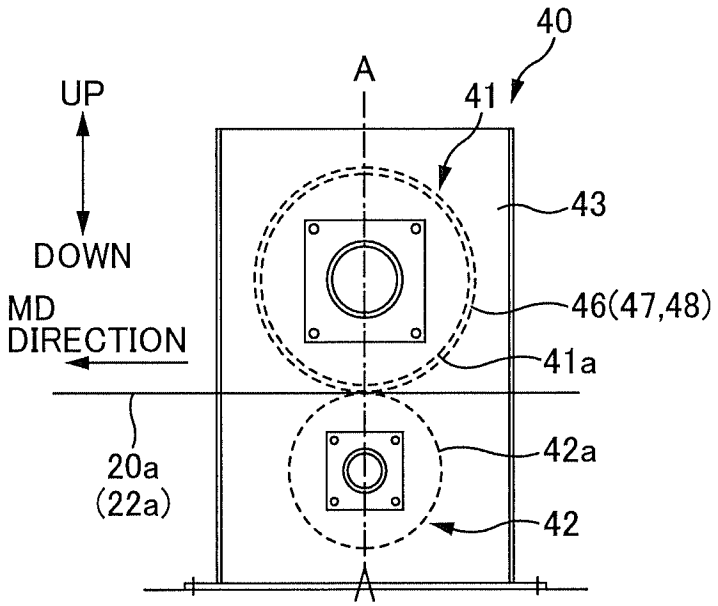
40
A
UP
41
43
DOWN
MD DIRECTION
46(47,48)
41a
42a
20a
(22a)
42

FIG. 7

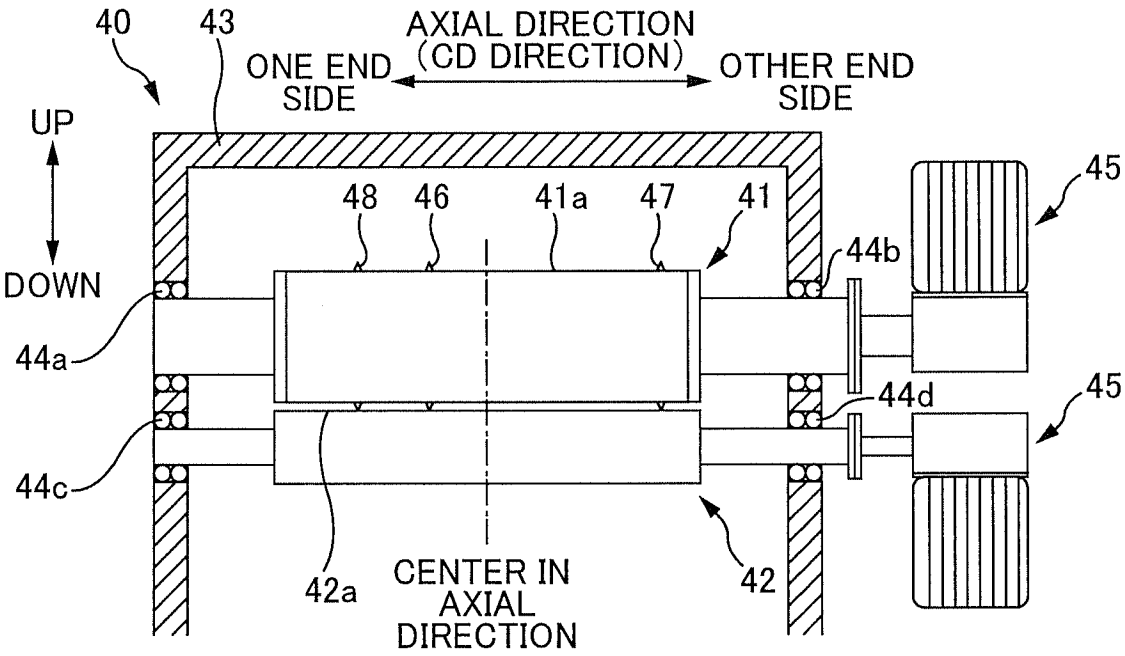
40
43
AXIAL DIRECTION
(CD DIRECTION)
ONE END SIDE
OTHER END SIDE
UP
DOWN
48
46
41a
47
41
45
44b
44a
44d
45
44c
42a
CENTER IN AXIAL DIRECTION
42

FIG. 8

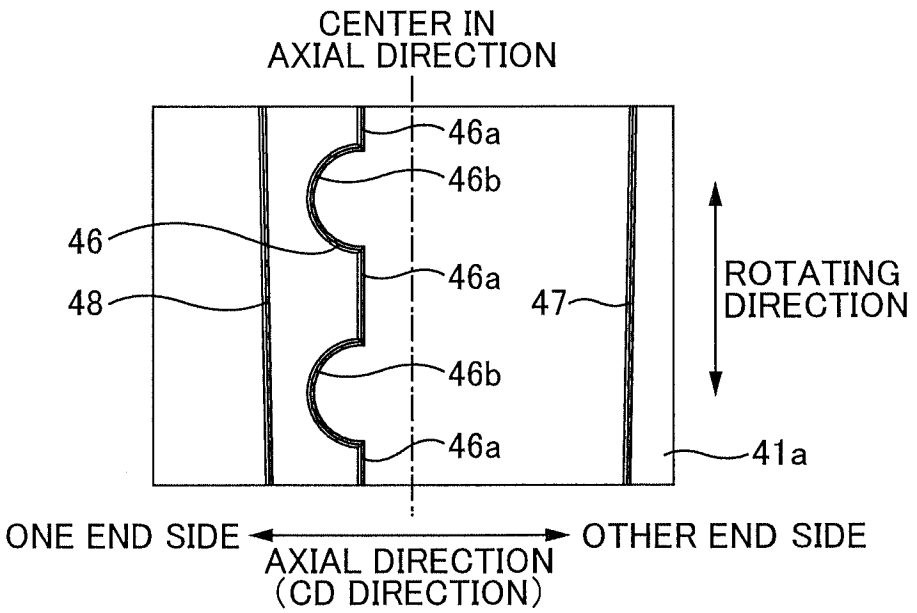
CENTER IN AXIAL DIRECTION
46a
46b
46
46a
48
47
ROTATING DIRECTION
46b
46a
41a
ONE END SIDE
OTHER END SIDE
AXIAL DIRECTION
(CD DIRECTION)

FIG. 9

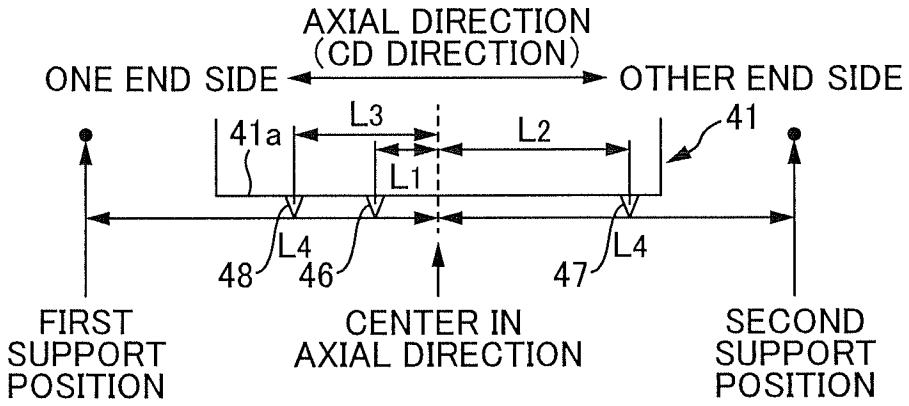

FIG. 10

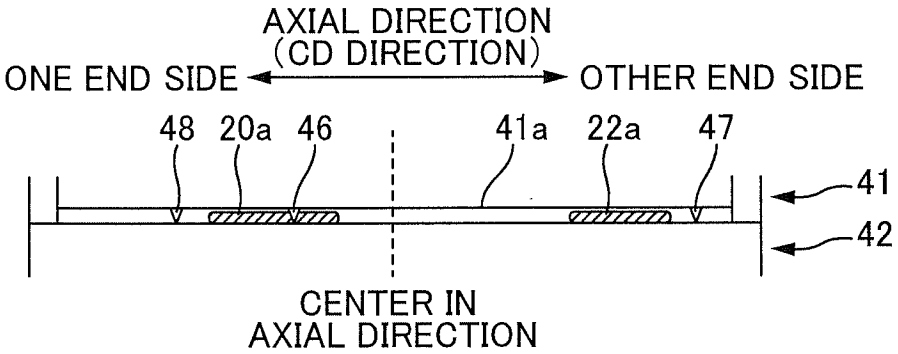

FIG. 11

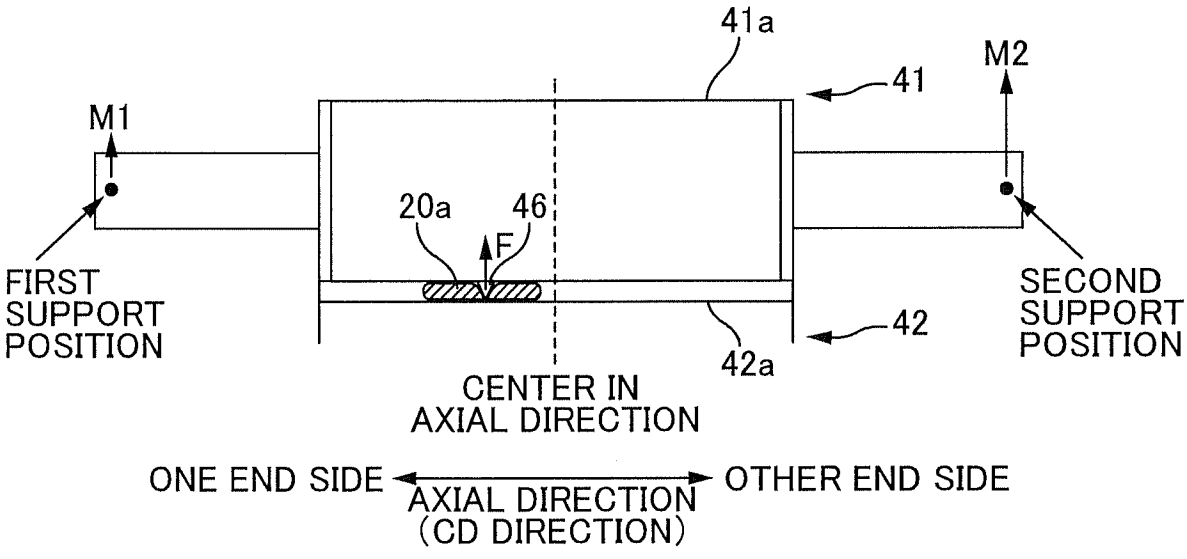

FIG. 12

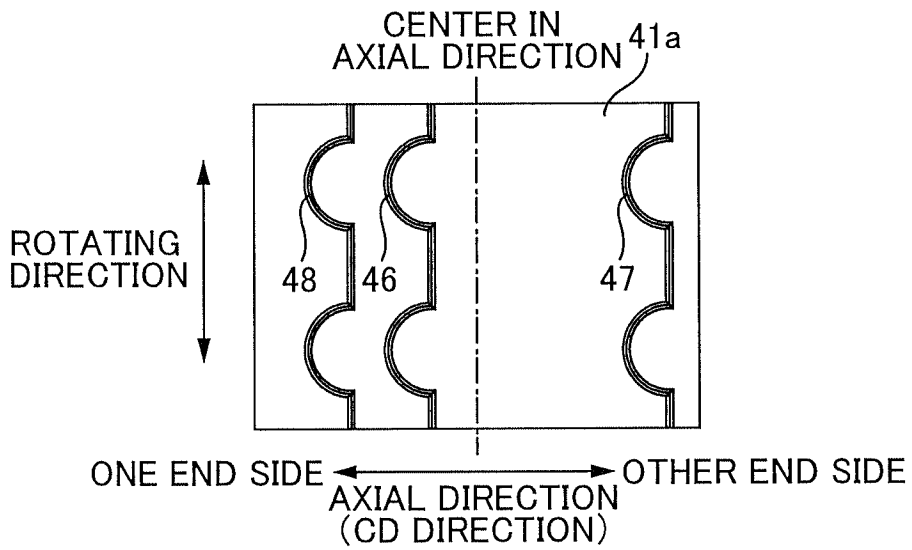

FIG. 13A

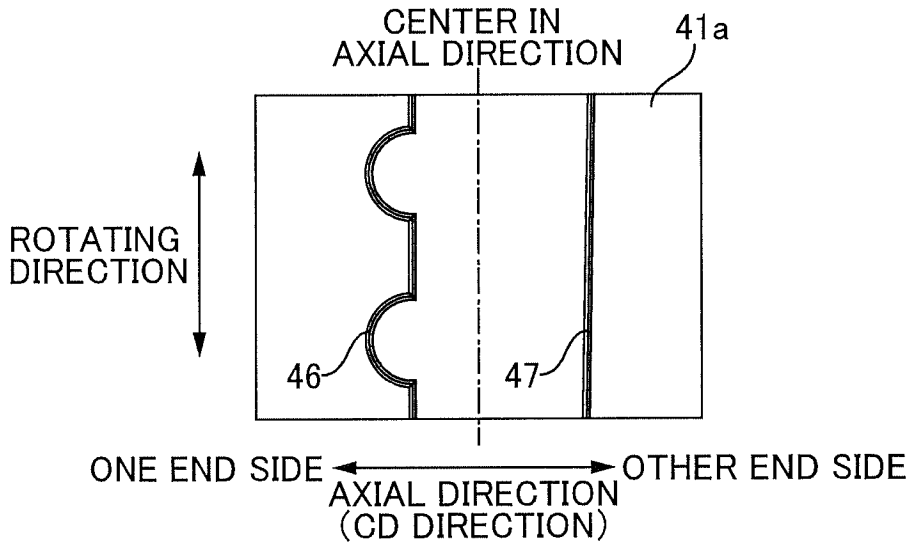

FIG. 13B

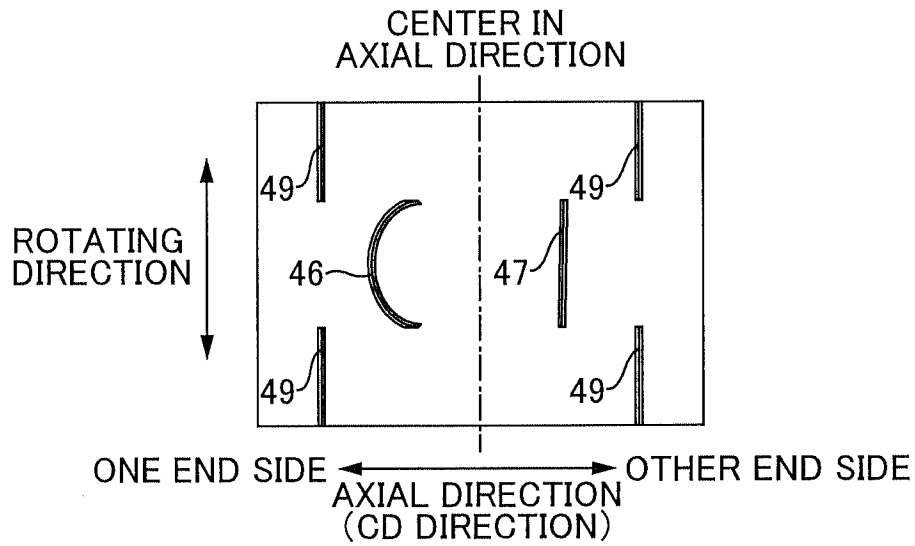

FIG. 13C