[図1]

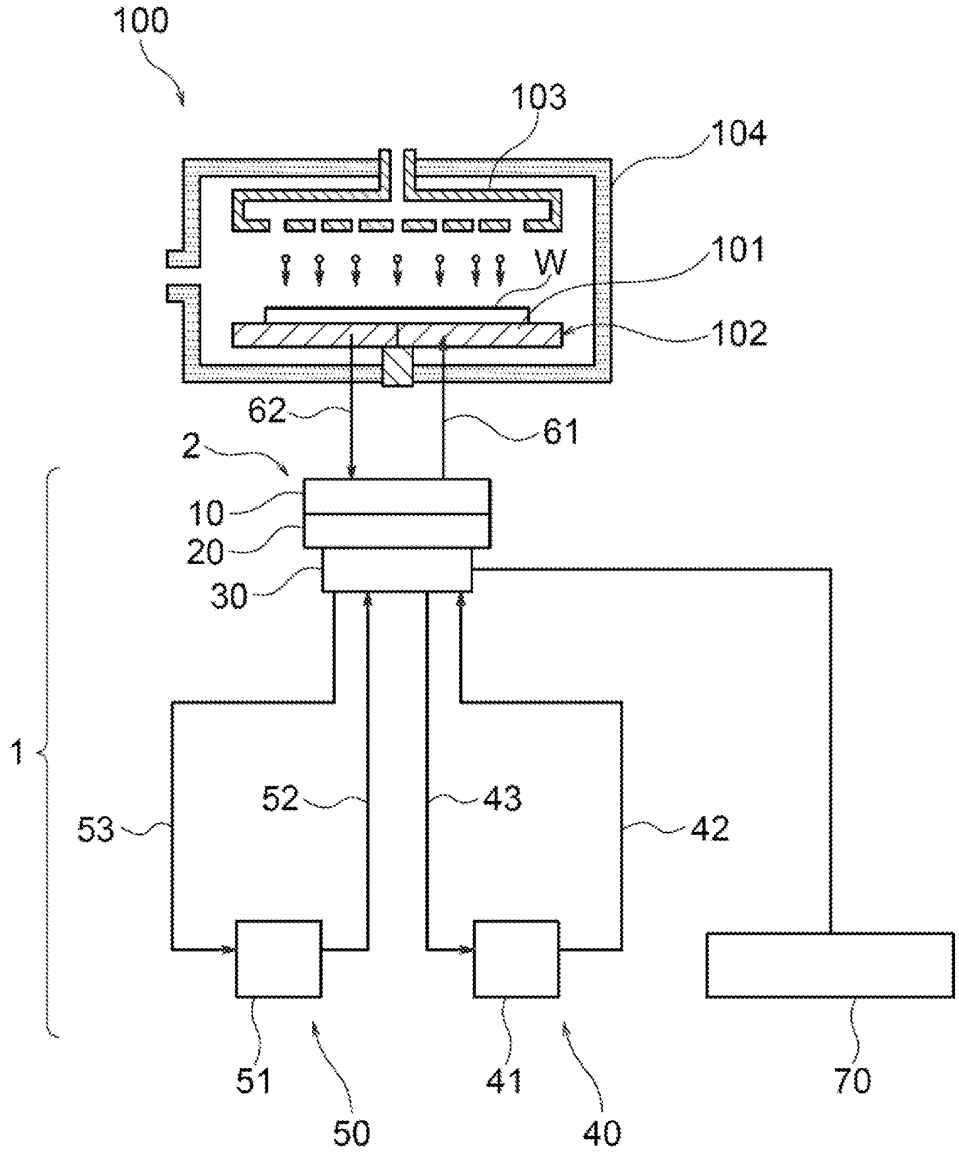

[図2]

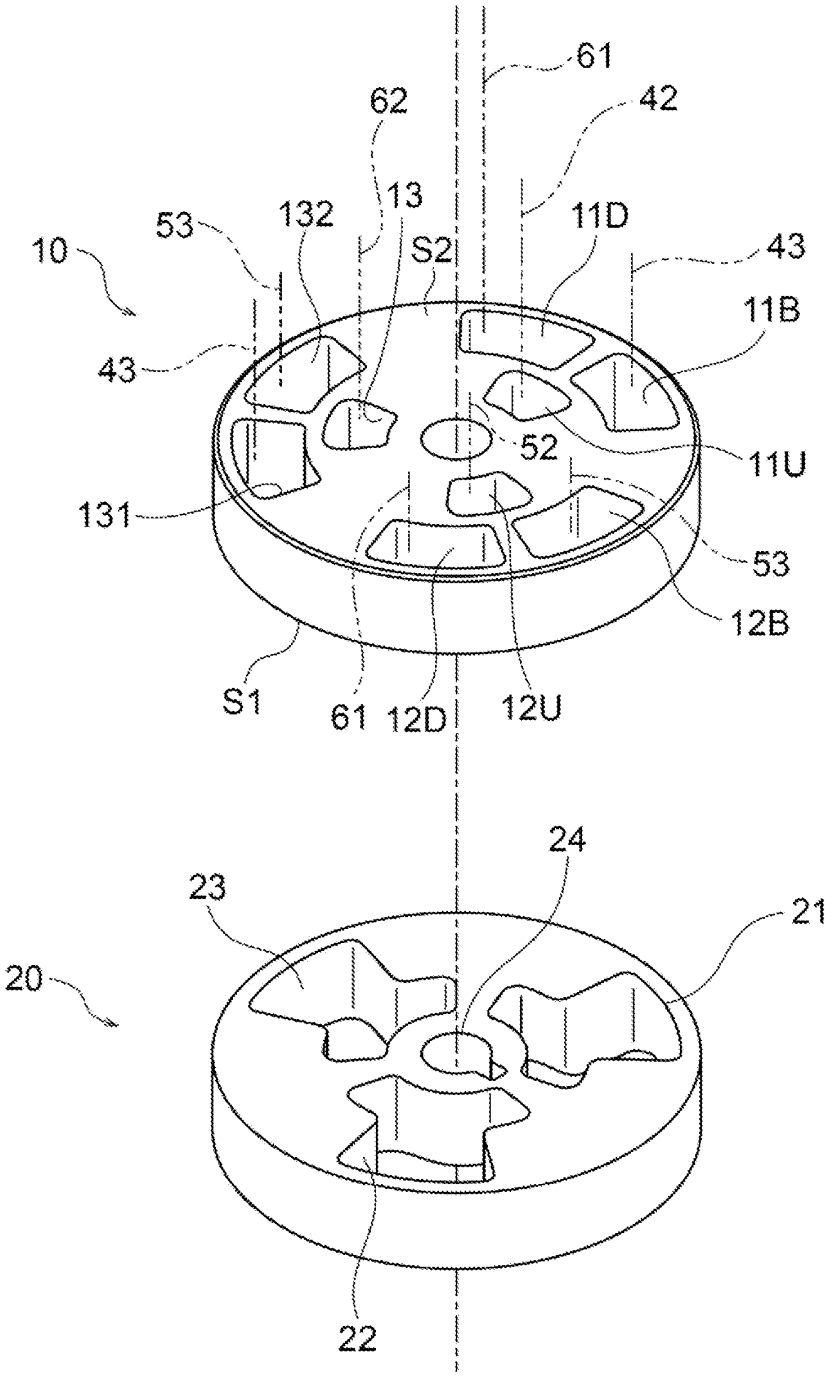
61
62
42
13
132
53
11D
10
S2
43
43
11B
52
11U
131
53
12B
S1
61
12D
12U
24
23
21
20
22

[図3A]

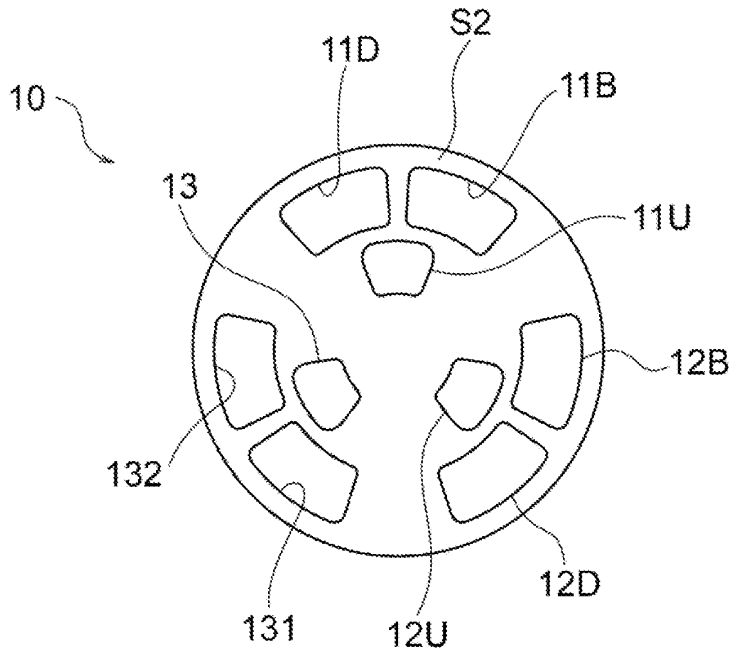

[図3B]

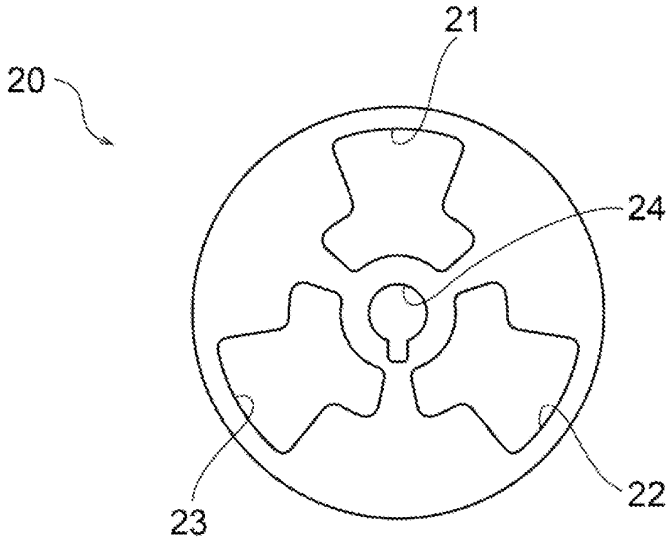

[図4A]

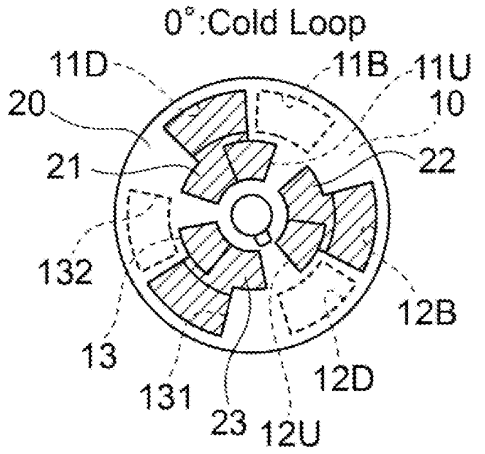
0°:Cold Loop
11D
11B
11U
20
10
21
22
132
12B
13
131
12D
23
12U

[図4B]

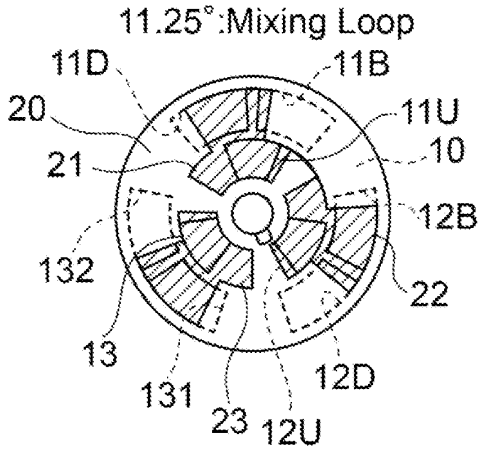
11.25°:Mixing Loop
11D
11B
20
11U
21
10
12B
132
22
13
131
12D
23
12U

[図4C]

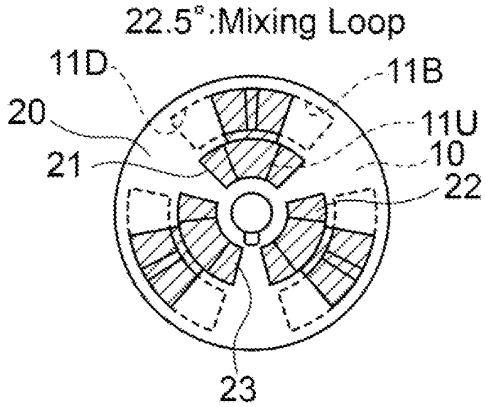
22.5°:Mixing Loop
11D
11B
20
11U
21
10
22
23

[図4D]

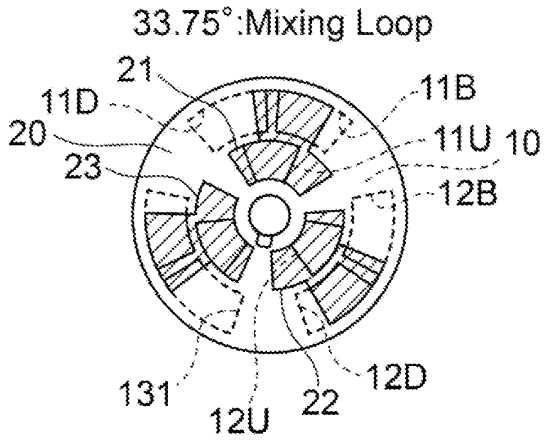
33.75°:Mixing Loop
21
11D
20
23
11B
11U
10
12B
131
12U
22
12D

[図4E]

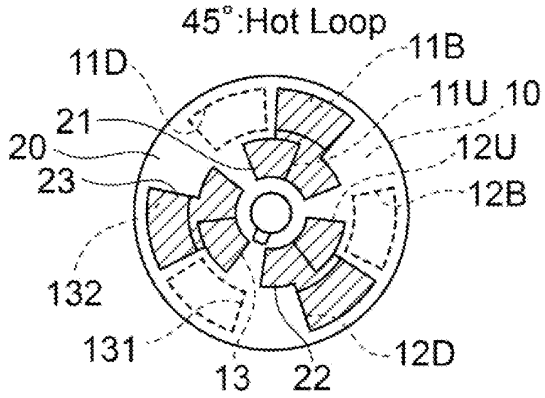
45°:Hot Loop
11D
21
20
23
11B
11U
10
12U
12B
132
131
13
22
12D

[図5]

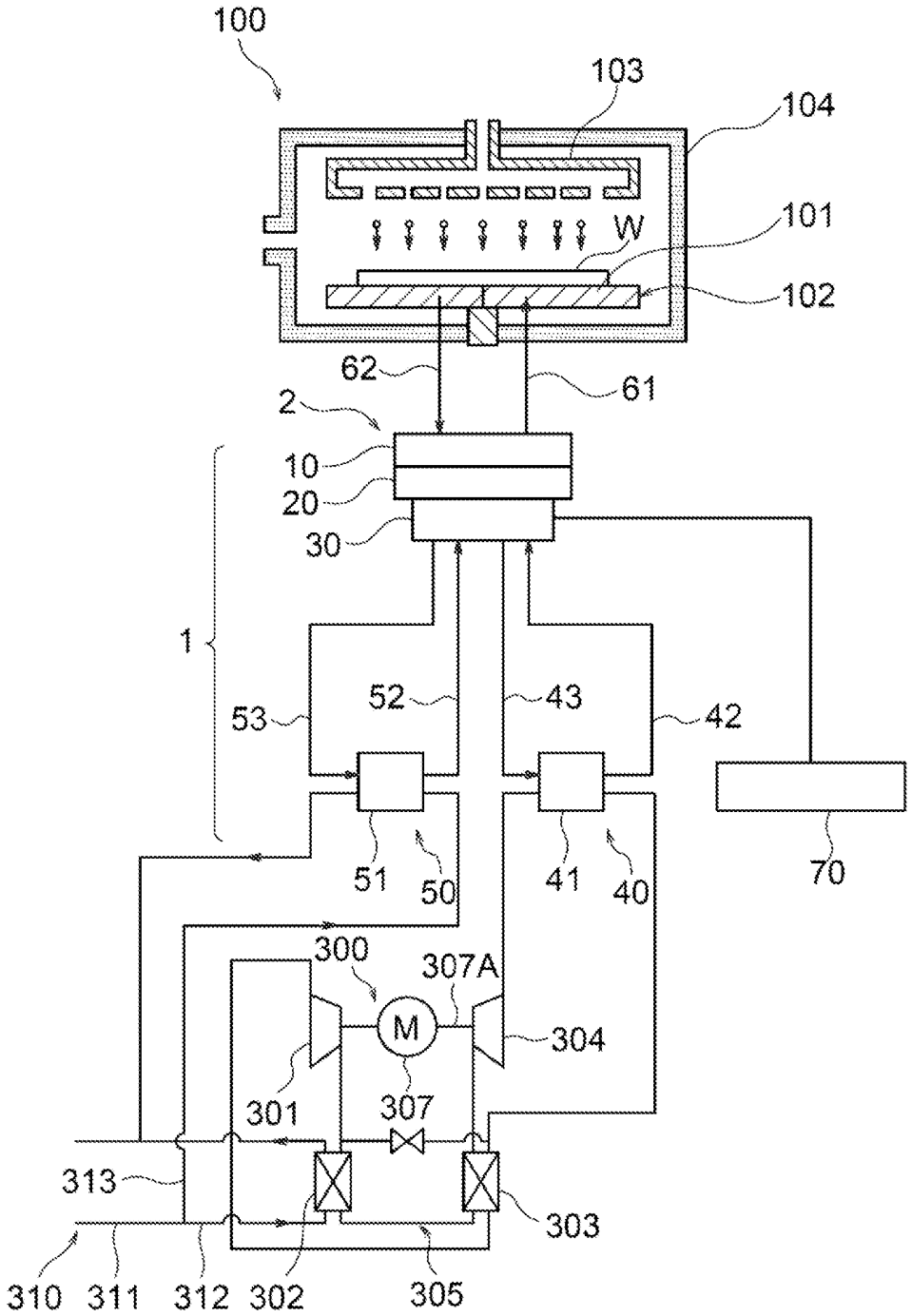
100
103
104
101
W
102
62
61
2
10
20
30
1
53
52
43
42
51
50
41
40
70
300
307A
M
304
301
307
313
303
310
311
312
302
305

[図6]

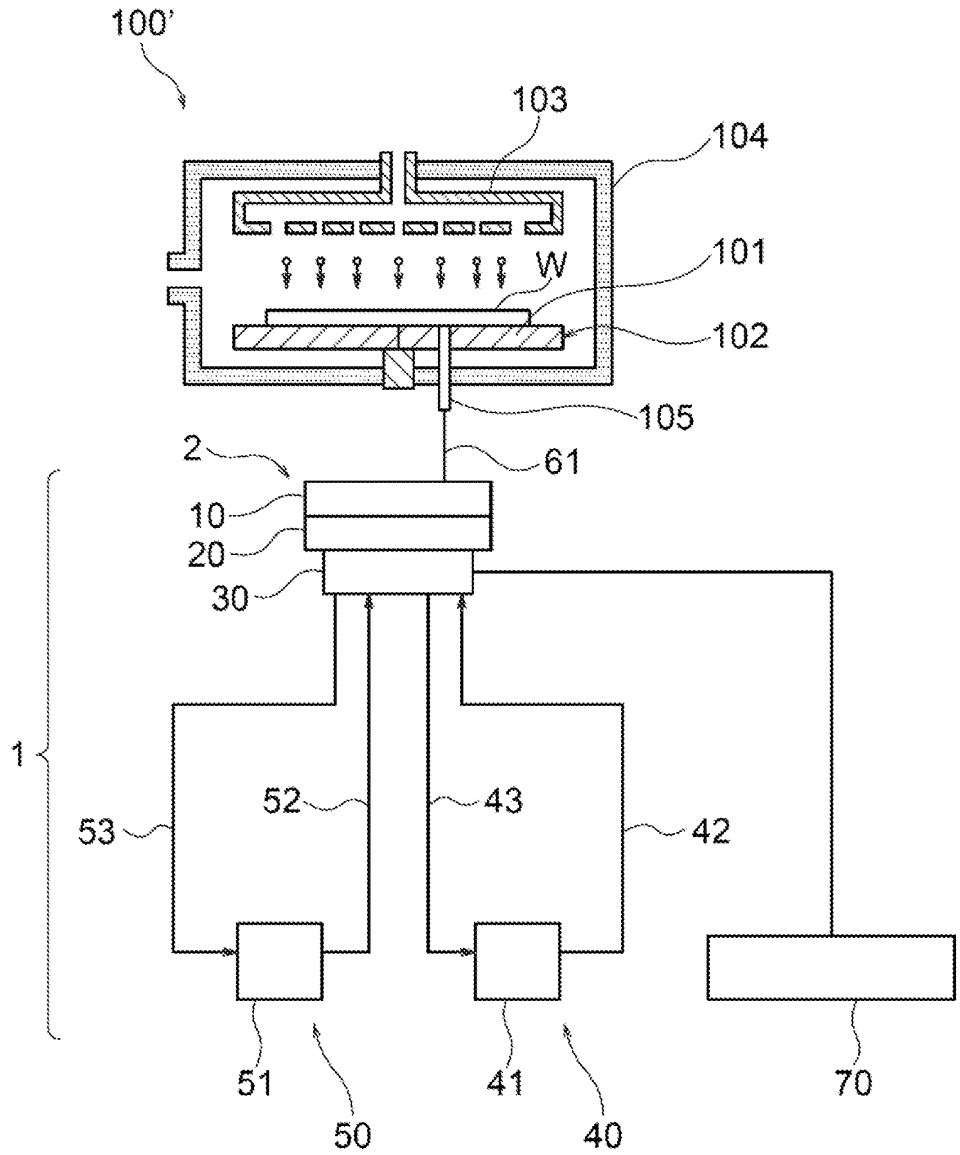

[図7]

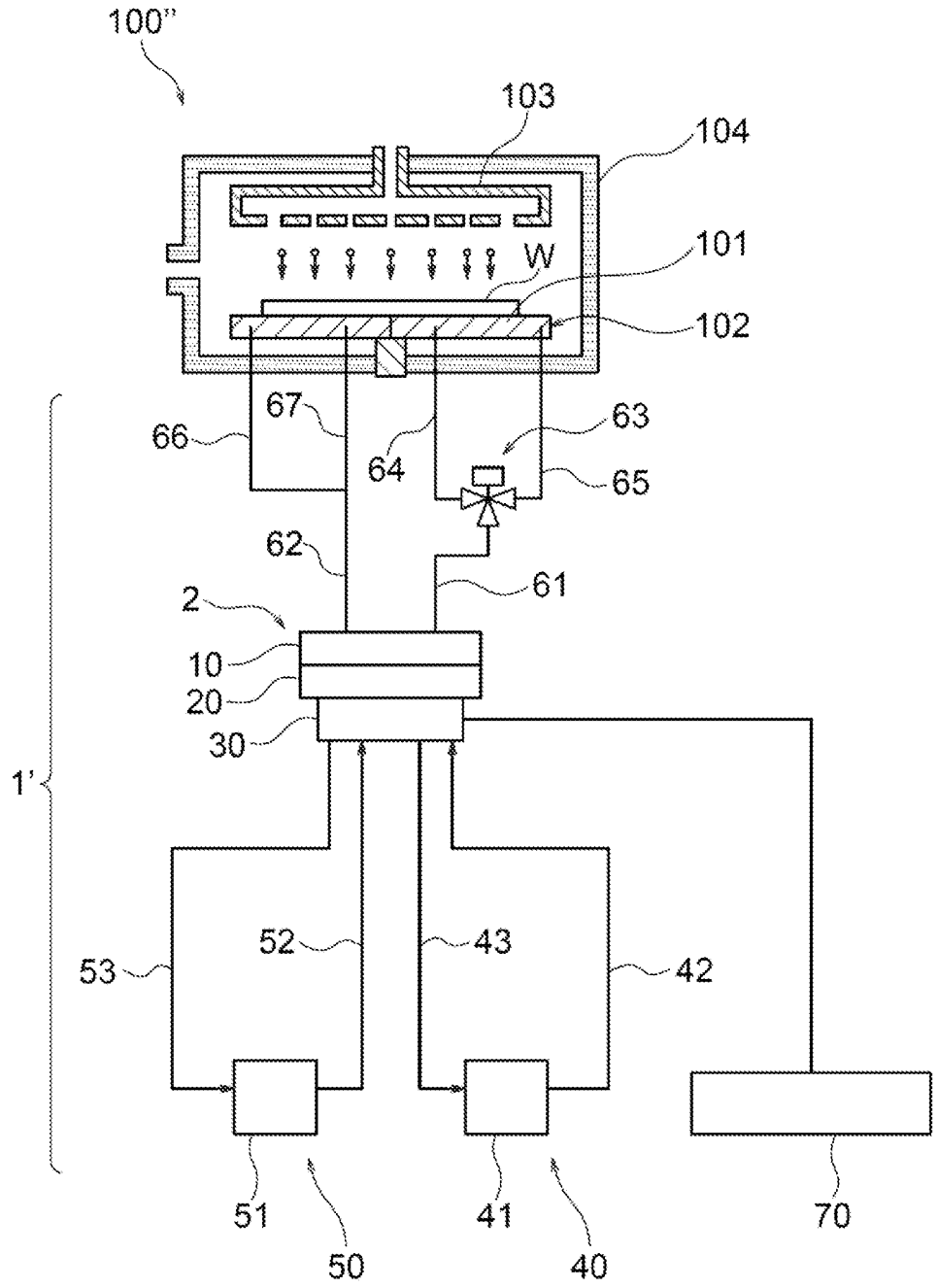
100''
103
104
101
W
102
67
66
64
63
65
62
61
2
10
20
30
1'
52
53
43
42
51
50
41
40
70

[図8]

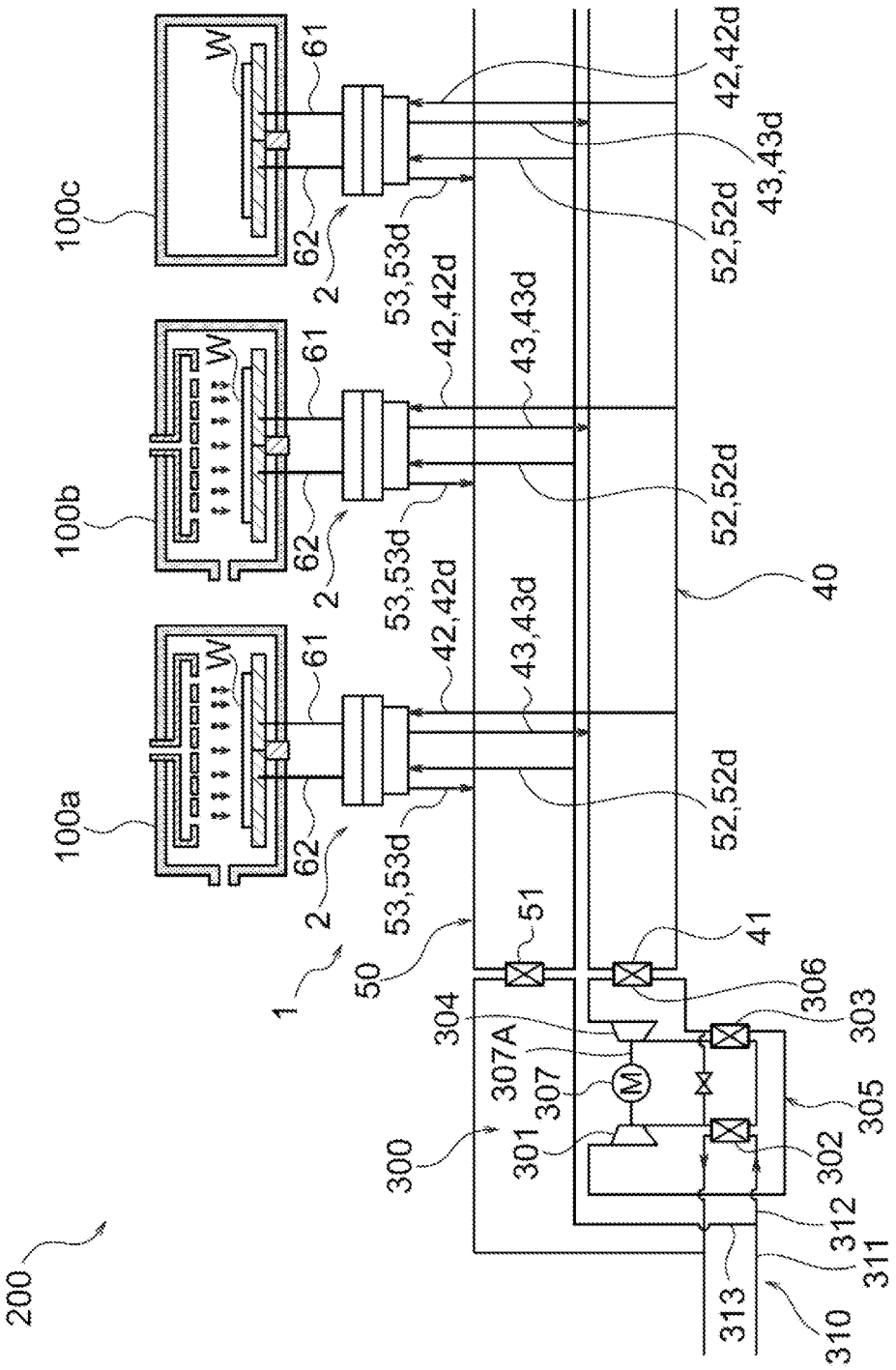
200
100a
100b
100c
W
61
62
2
1
50
51
53,53d
42,42d
43,43d
52,52d
40
41
300
301
302
303
304
305
306
307
307A
M
312
311
313
310