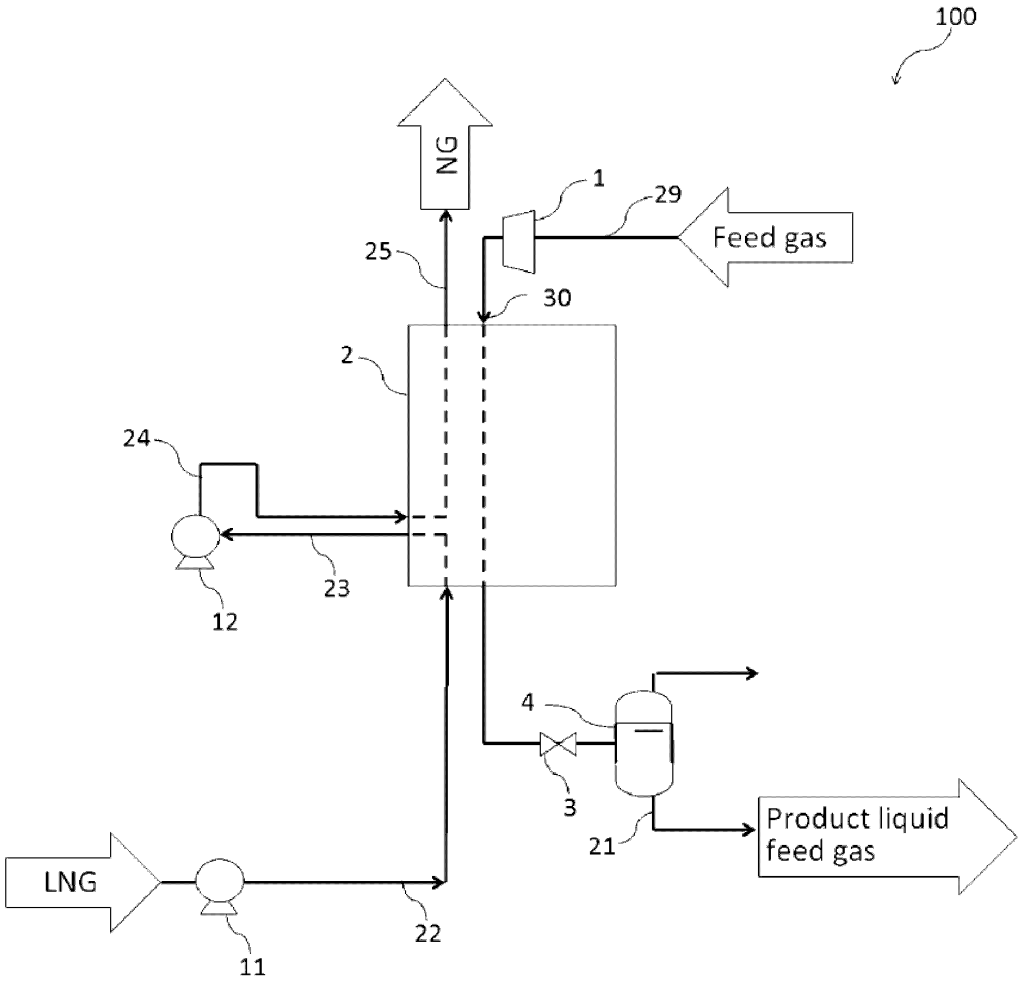
100
NG
1
29
Feed gas
25
30
2
24
23
12
4
3
21
Product liquid
feed gas
LNG
22
11

Figure 1

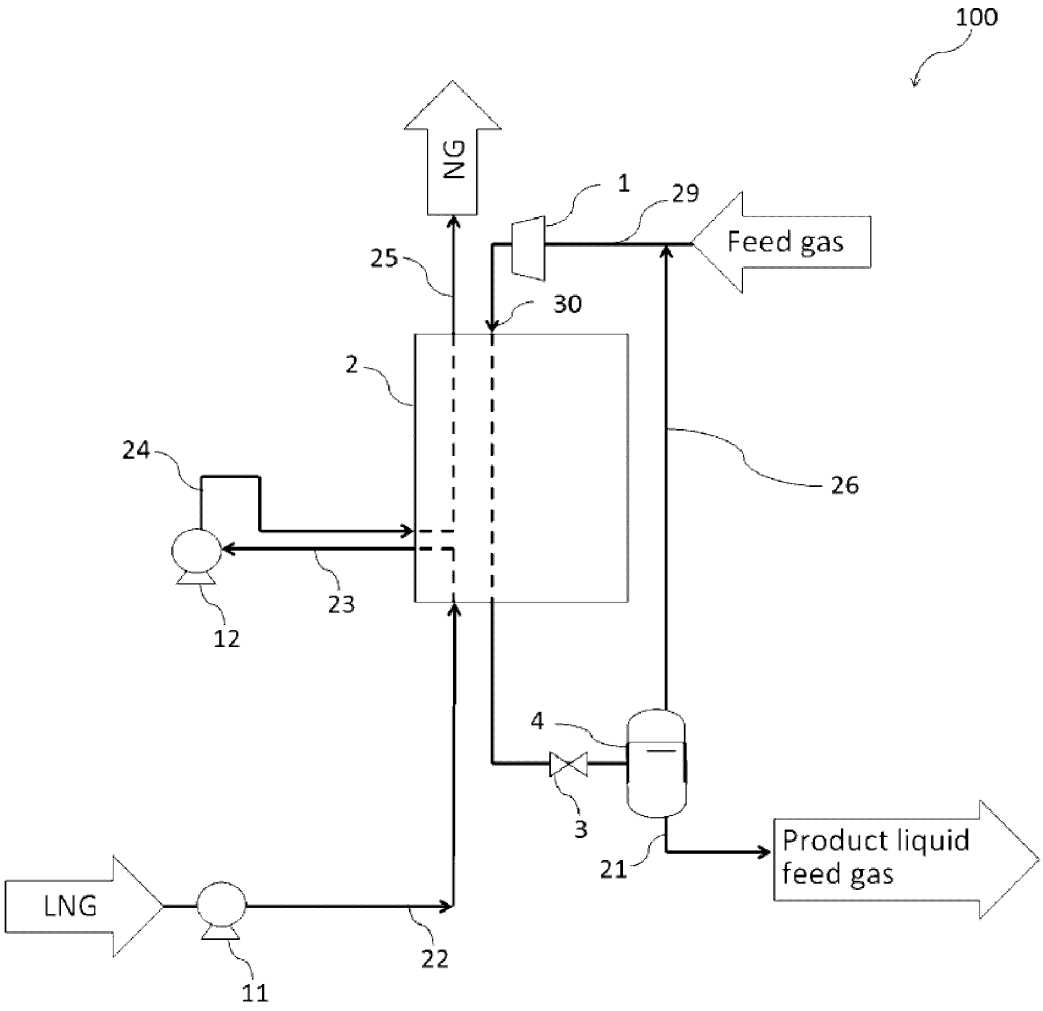
100
NG
1
29
Feed gas
25
30
2
24
26
23
12
4
3
21
Product liquid
feed gas
LNG
22
11

Figure 2

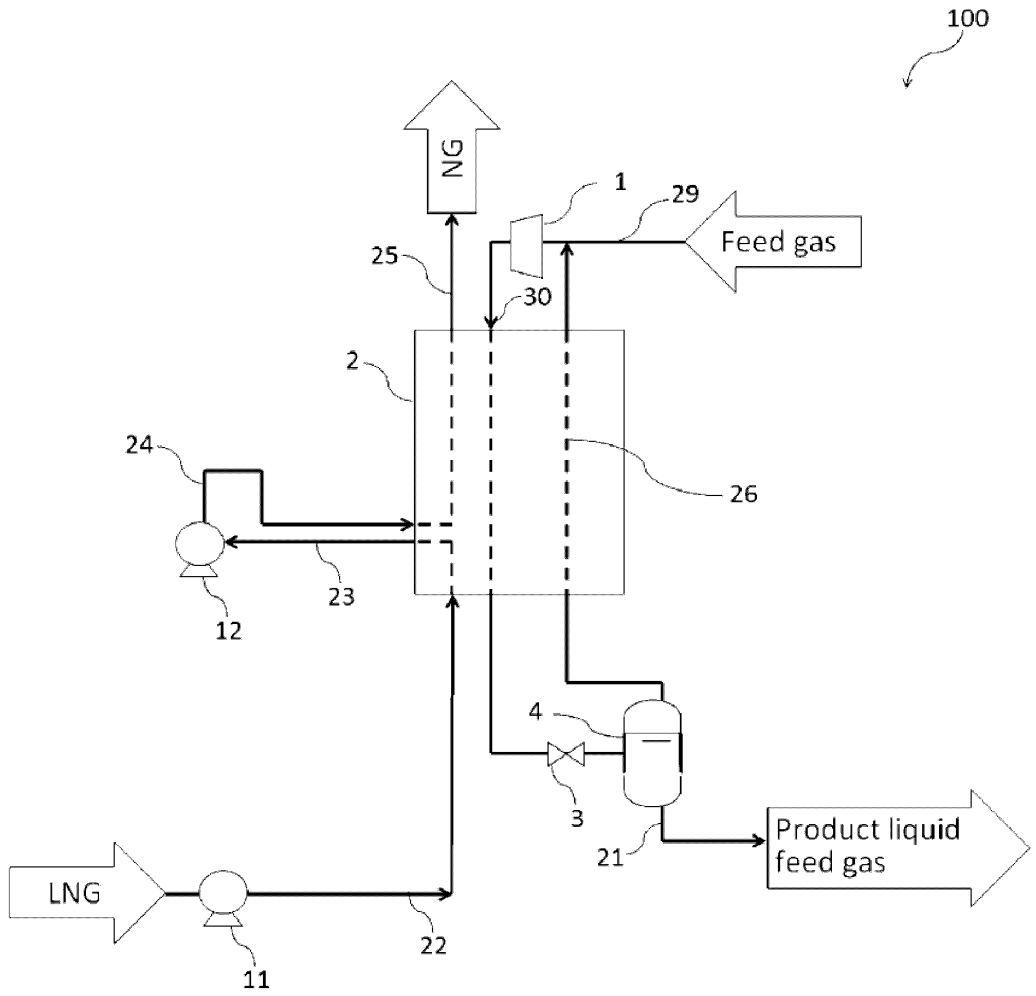
100
NG
1
29
Feed gas
25
30
2
24
26
23
12
4
3
21
Product liquid
feed gas
LNG
22
11

Figure 3

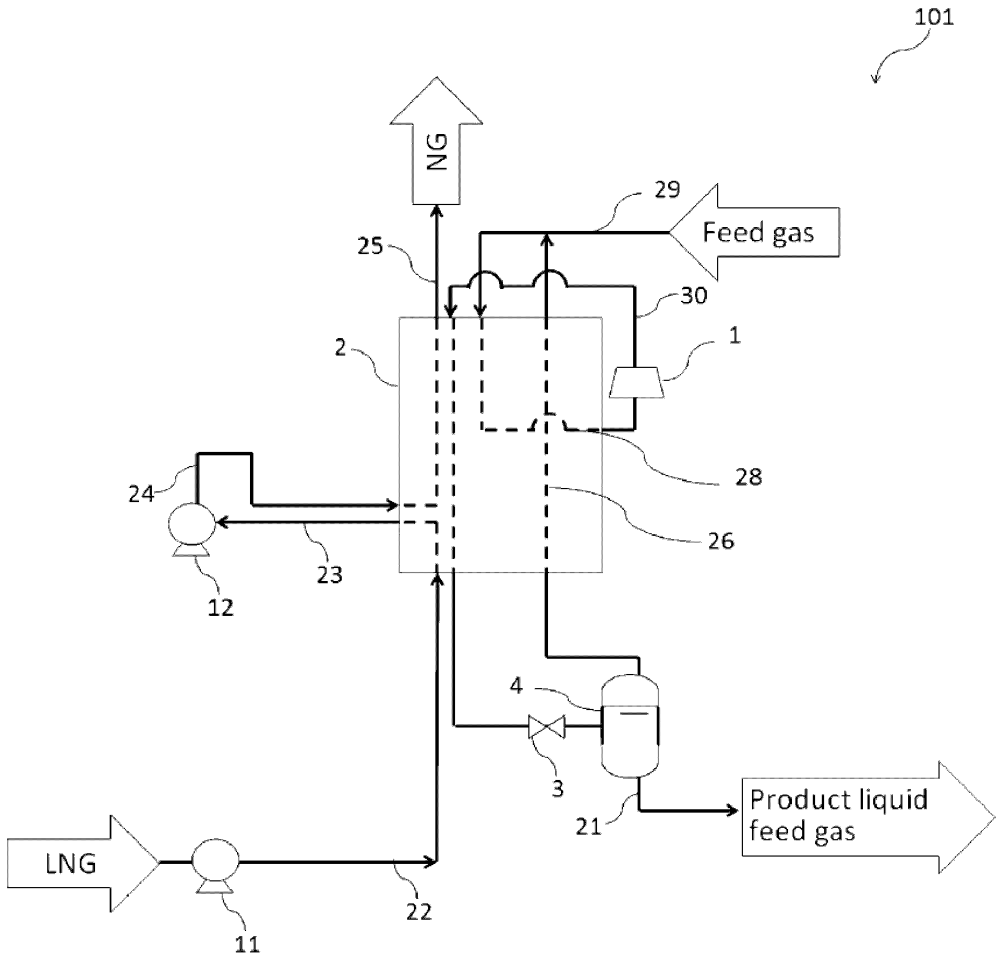
101
NG
29
Feed gas
25
30
2
1
28
24
26
23
12
4
3
21
Product liquid
feed gas
LNG
22
11

Figure 4

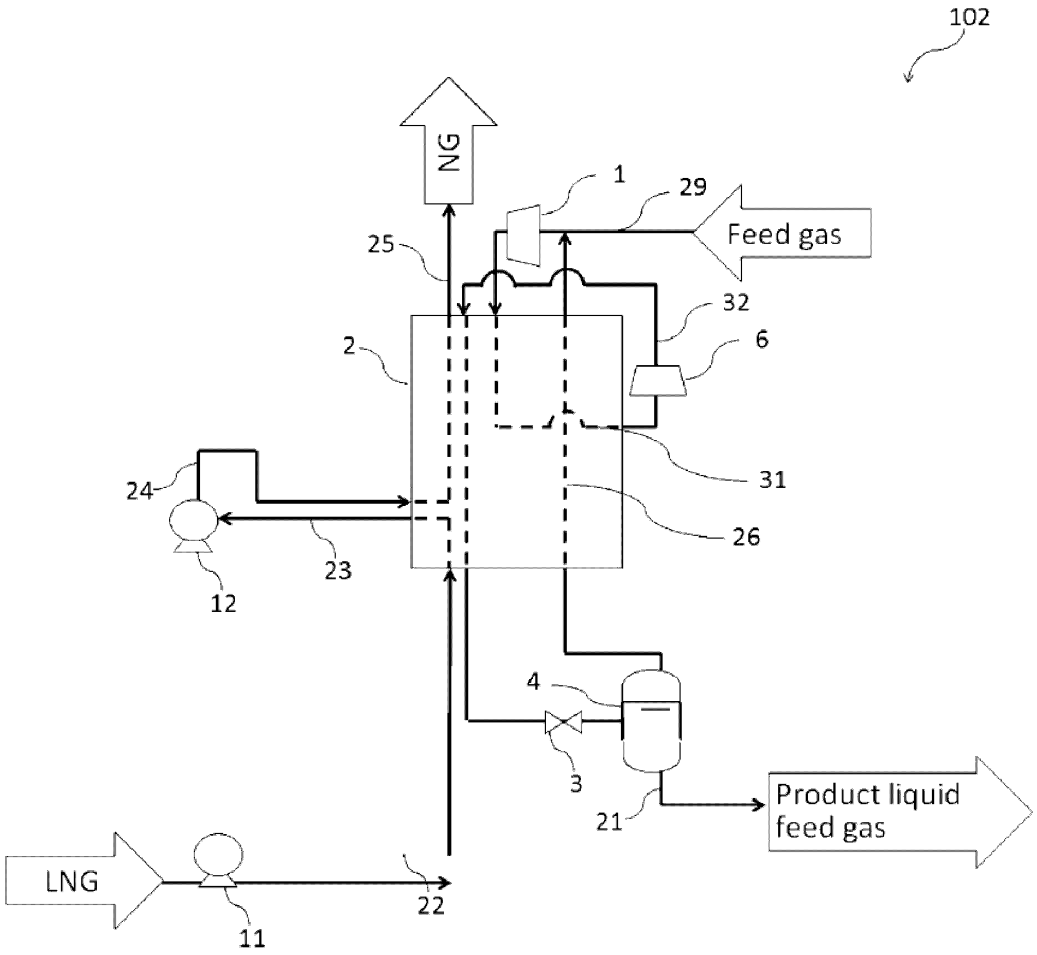
102
NG
1
29
Feed gas
25
32
6
2
31
24
26
23
12
4
3
21
Product liquid
feed gas
LNG
22
11

Figure 5

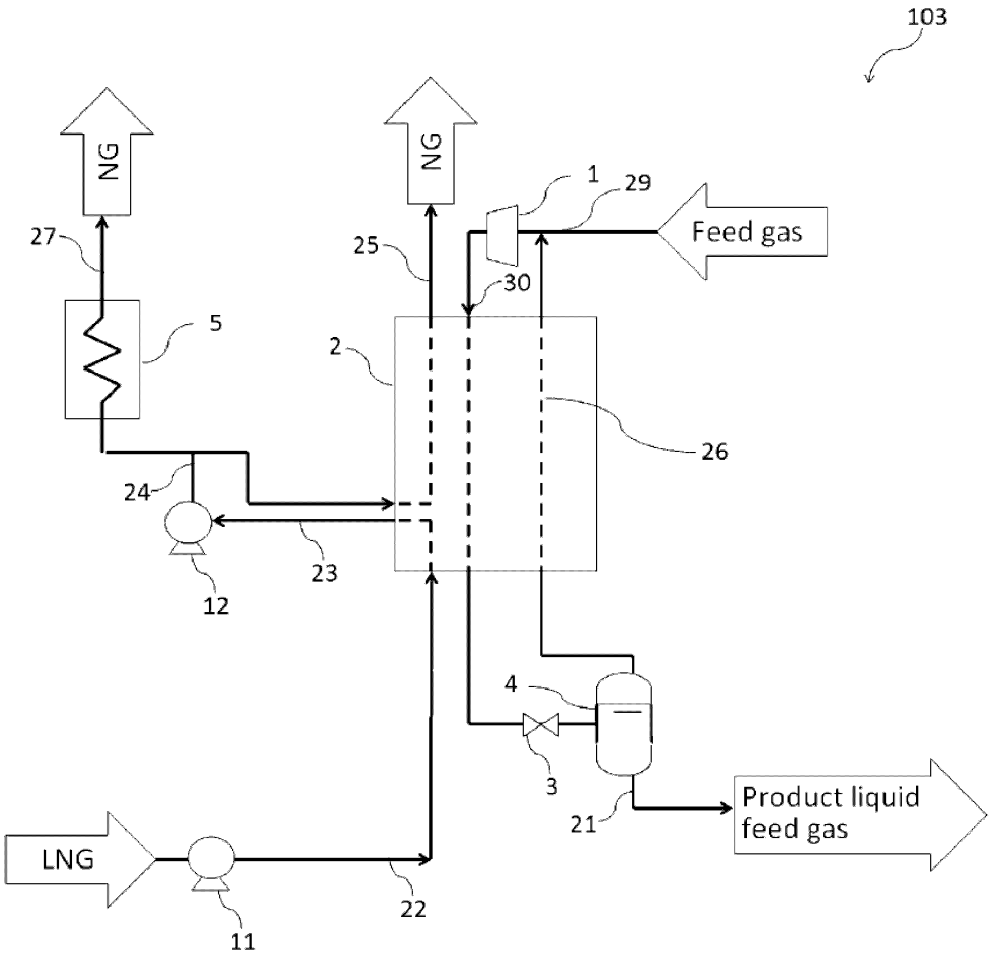
103
NG
NG
1
29
Feed gas
27
25
30
5
2
26
24
23
12
4
3
21
Product liquid
feed gas
LNG
22
11

Figure 6

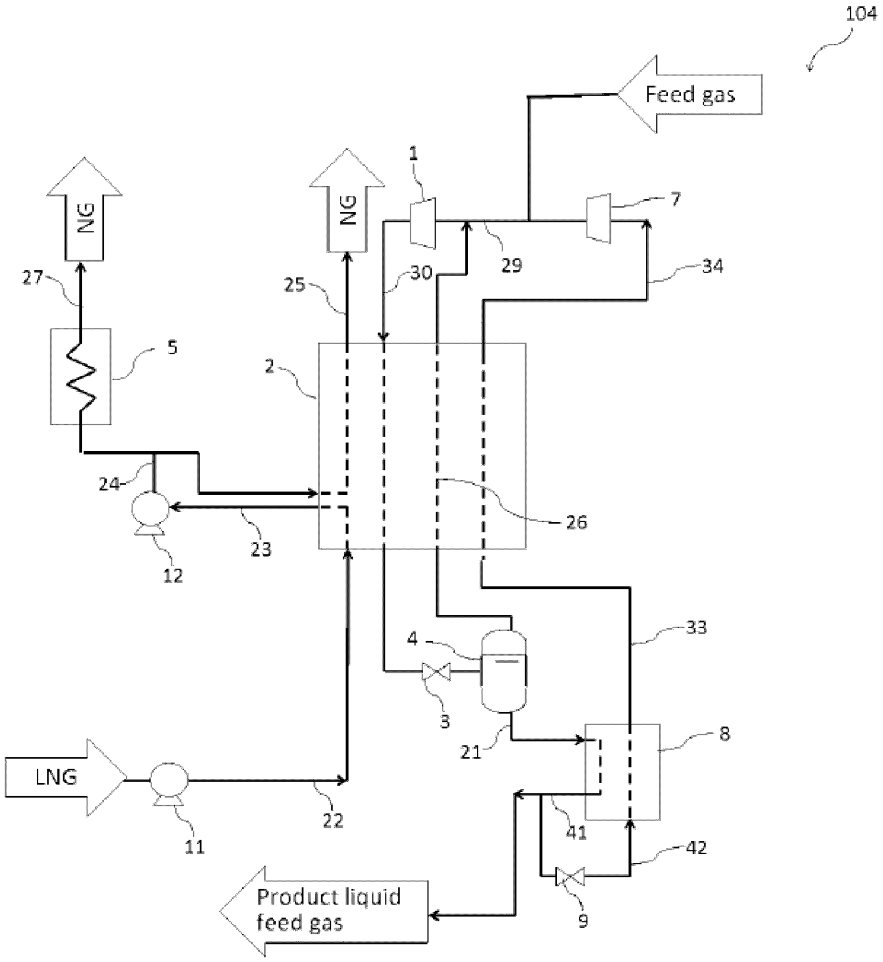
104
Feed gas
NG
NG
1
7
27
25
30
29
34
5
2
24
26
23
12
4
33
3
21
8
LNG
22
11
41
42
9
Product liquid
feed gas

Figure 7

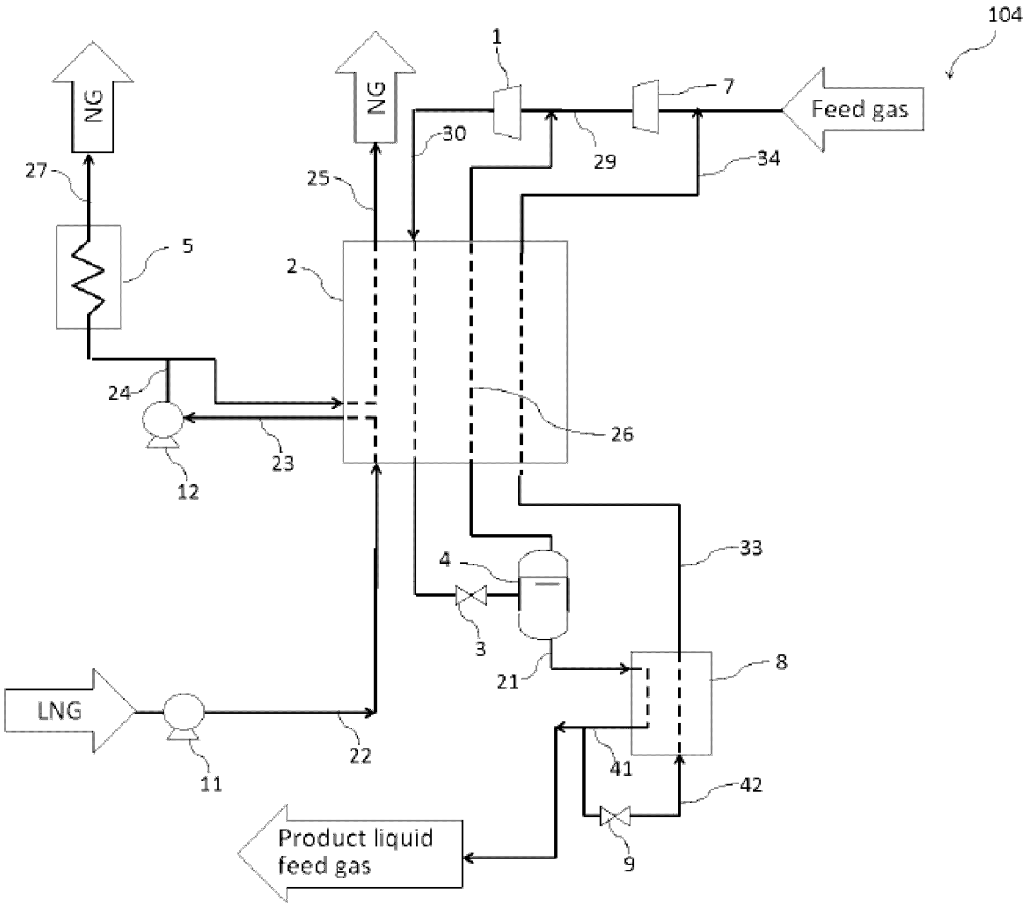
104
NG
NG
1
7
Feed gas
30
29
34
27
25
5
2
24
26
23
12
33
4
3
21
8
LNG
22
11
41
42
9
Product liquid
feed gas

Figure 8

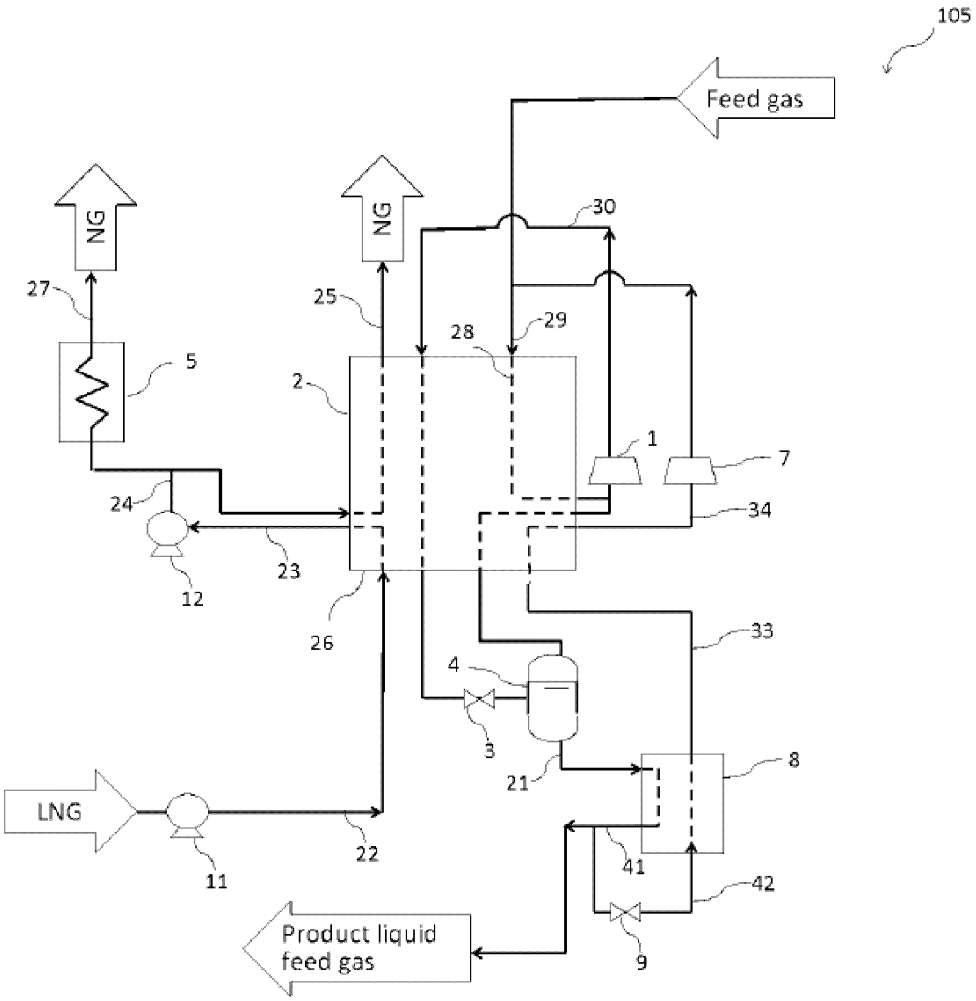
105
Feed gas
NG
NG
30
27
25
28
29
5
2
1
7
24
34
23
12
26
33
4
3
21
8
LNG
11
22
41
42
Product liquid
feed gas
9

Figure 9

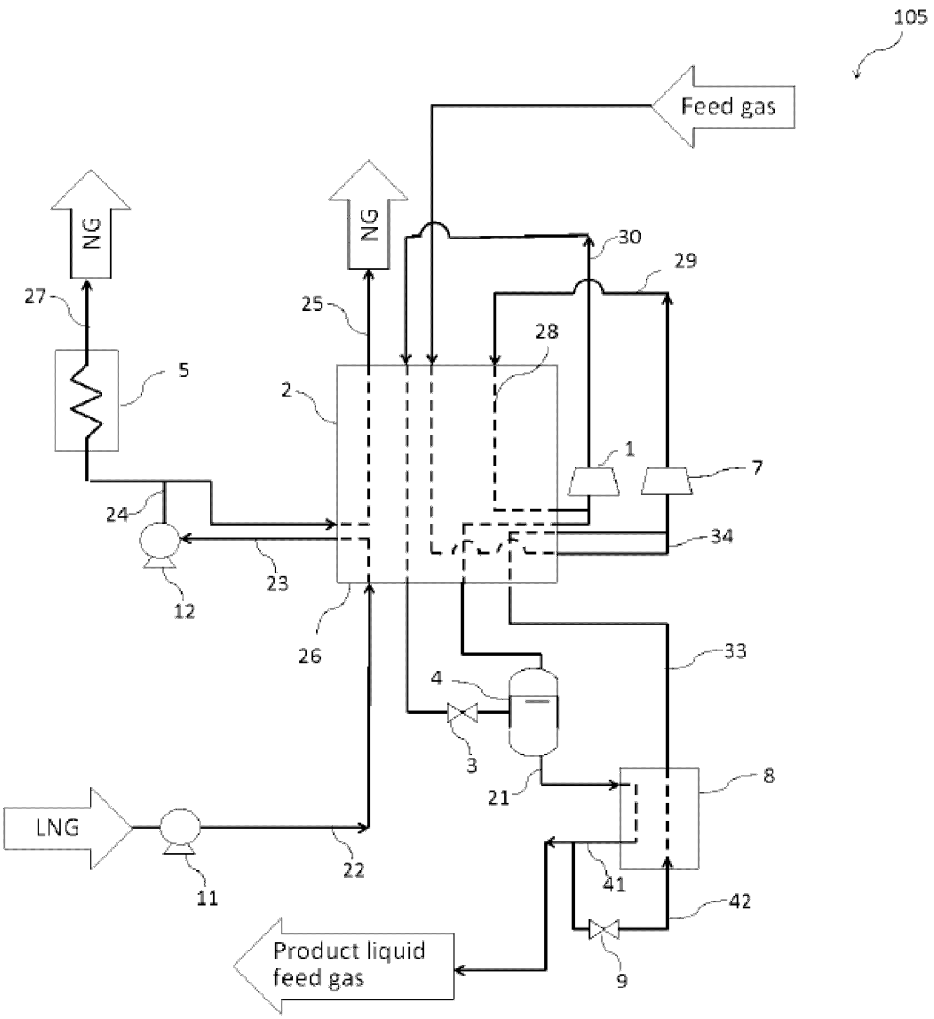
105
Feed gas
NG
NG
27
25
30
29
28
5
2
1
7
24
34
23
12
26
33
4
3
21
8
LNG
22
11
41
42
Product liquid
feed gas
9

Figure 10