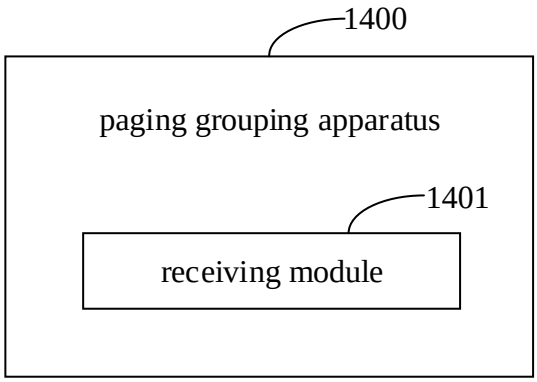
1400
paging grouping apparatus
1401
receiving module

FIG. 14

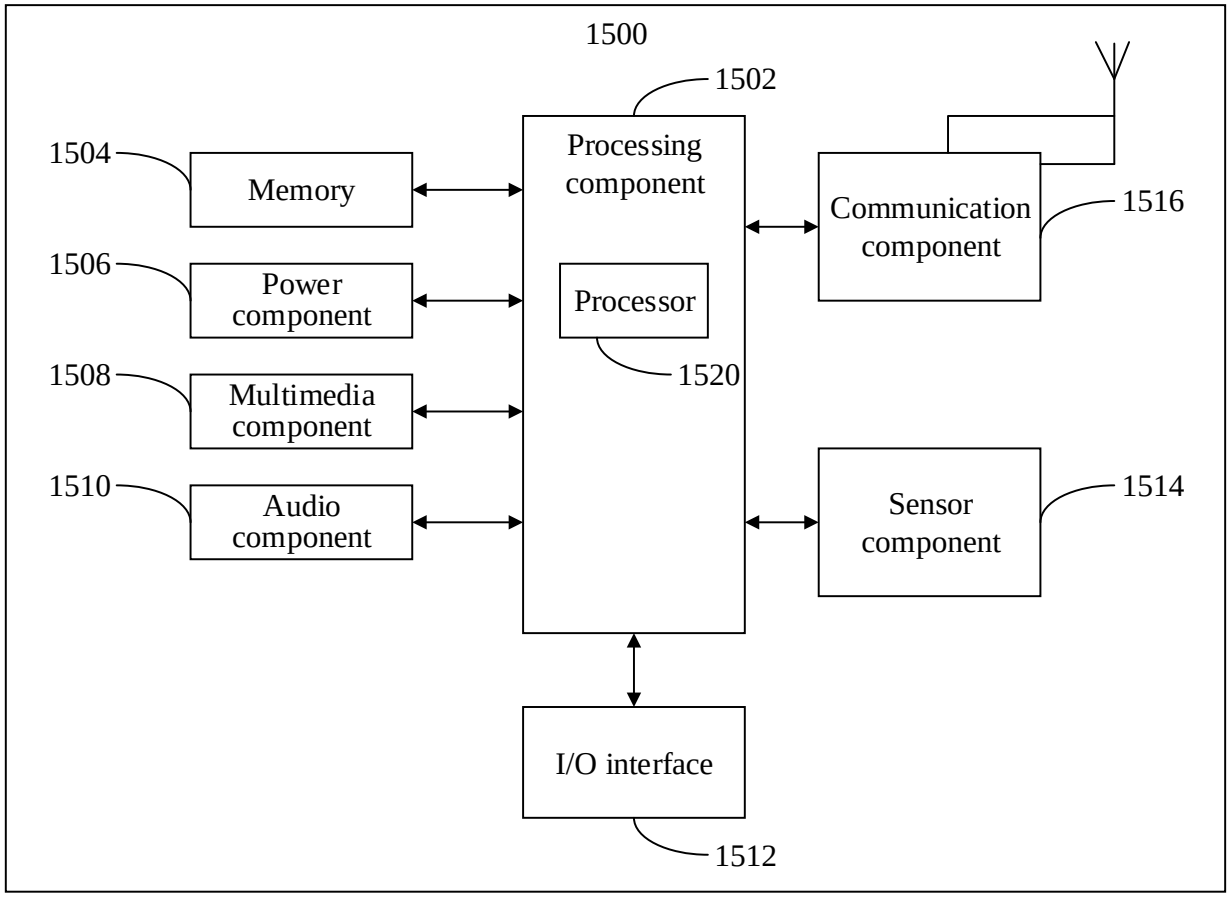
1500
1502
Processing component
Processor
1520
1504
Memory
1506
Power component
1508
Multimedia component
1510
Audio component
Communication component
1516
Sensor component
1514
I/O interface
1512

FIG. 15

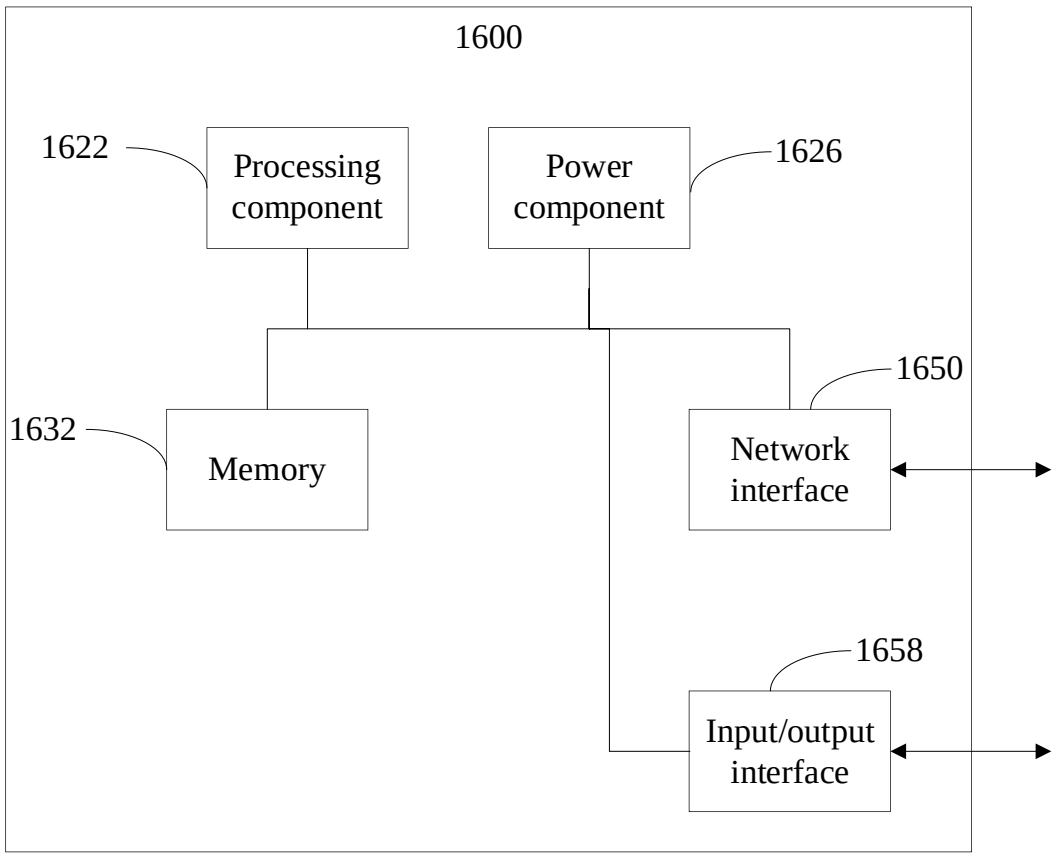
1600
1622
Processing component
Power component
1626
1650
1632
Memory
Network interface
1658
Input/output interface

FIG. 16