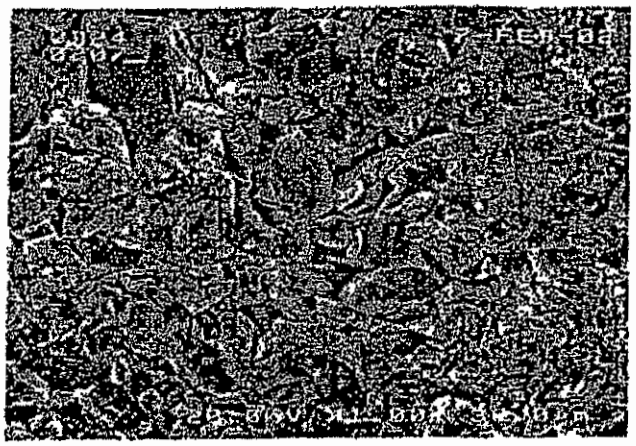

FIG. 1

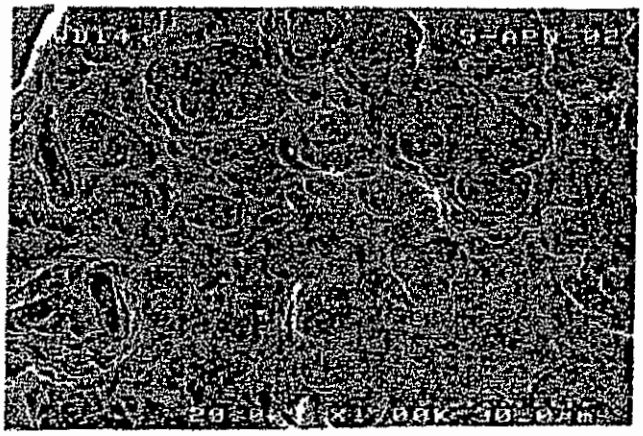

FIG. 2

FIG. 3

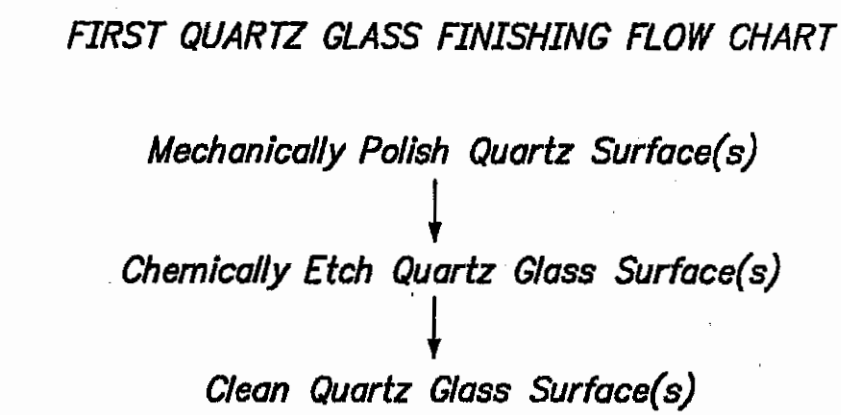
FIRST QUARTZ GLASS FINISHING FLOW CHART
Mechanically Polish Quartz Surface(s)
Chemically Etch Quartz Glass Surface(s)
Clean Quartz Glass Surface(s)

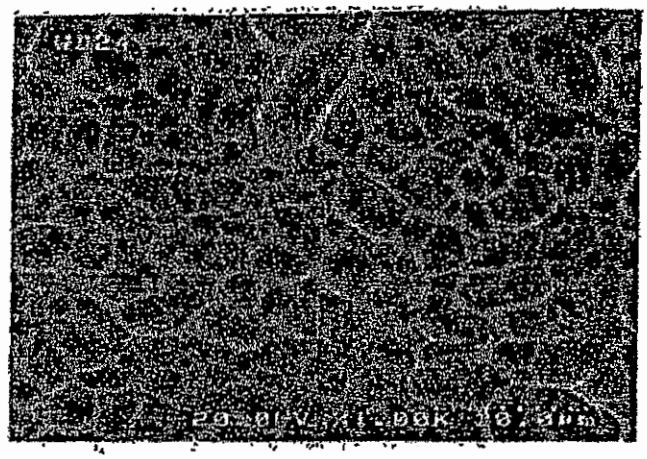

FIG. 4

FIG. 5

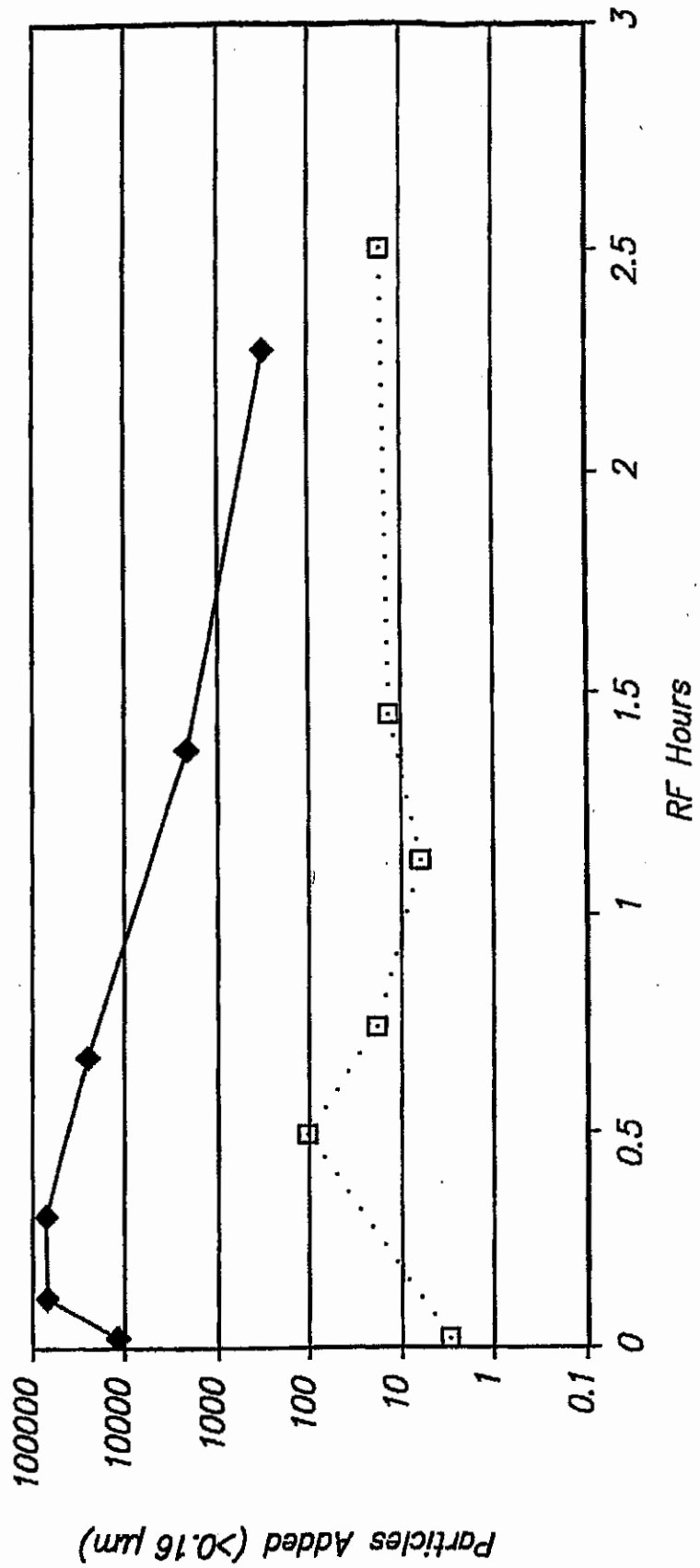
Particles Added (>0.16 µm)
100000
10000
1000
100
10
1
0.1
0
0.5
1
1.5
2
2.5
3
RF Hours

FIG. 6

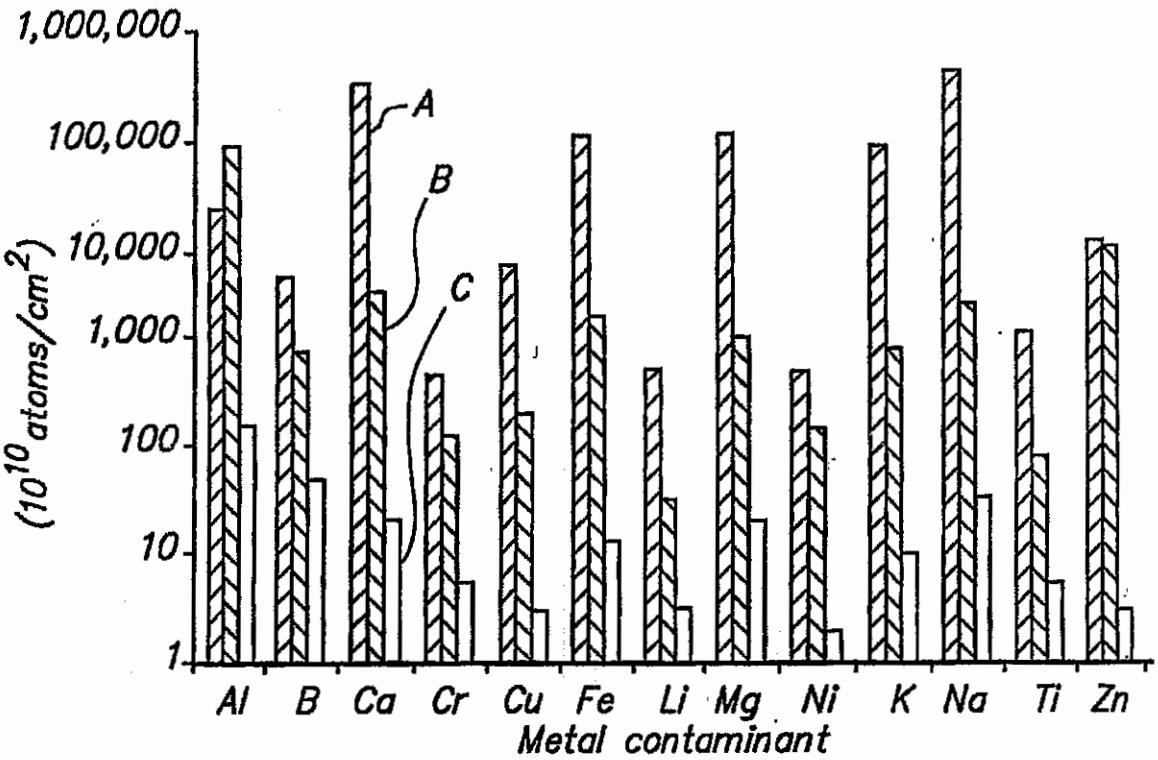
1,000,000
100,000
10,000
1,000
100
10
1
(10^{10} atoms/cm^2)
A
B
C
Al B Ca Cr Cu Fe Li Mg Ni K Na Ti Zn
Metal contaminant

FIG. 7

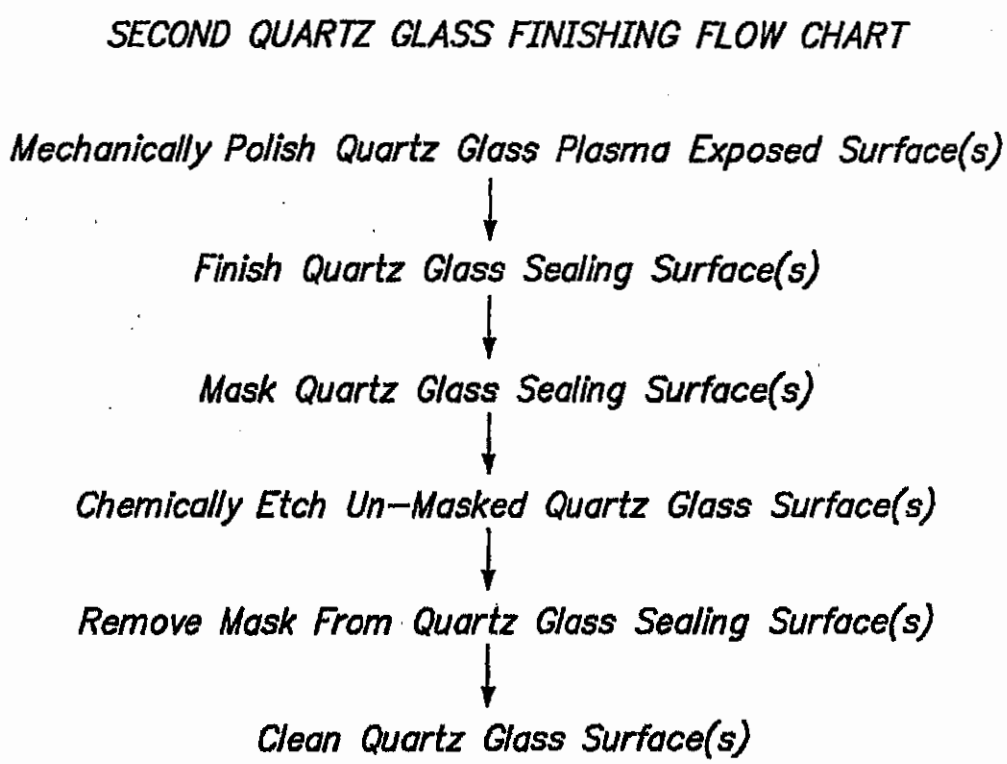
SECOND QUARTZ GLASS FINISHING FLOW CHART
Mechanically Polish Quartz Glass Plasma Exposed Surface(s)
Finish Quartz Glass Sealing Surface(s)
Mask Quartz Glass Sealing Surface(s)
Chemically Etch Un-Masked Quartz Glass Surface(s)
Remove Mask From Quartz Glass Sealing Surface(s)
Clean Quartz Glass Surface(s)

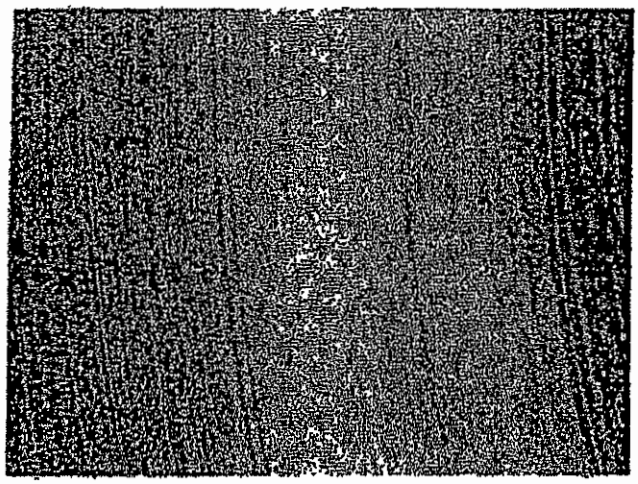

FIG. 8

FIG. 9

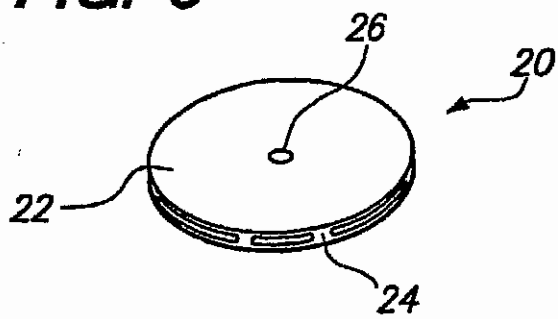

FIG. 10

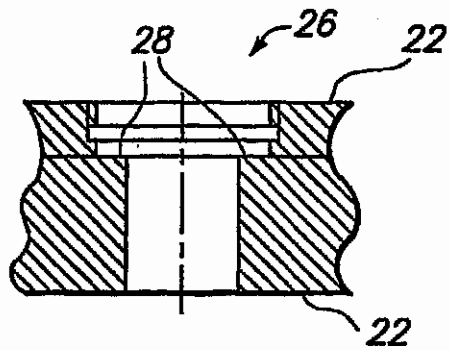

FIG. 11

