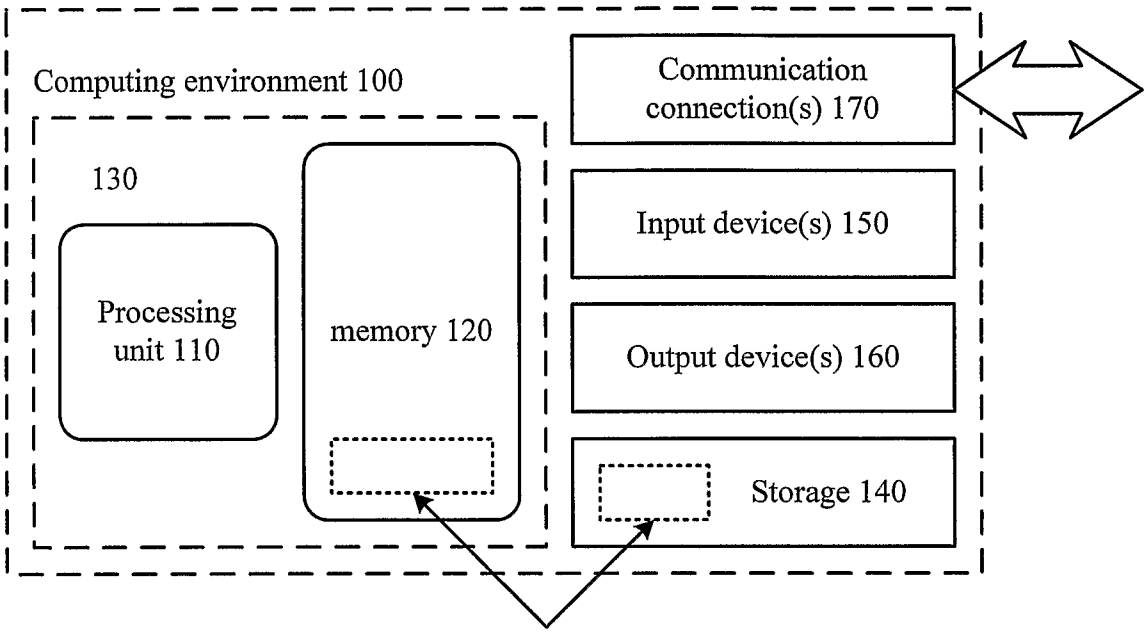
Computing environment 100
130
Processing unit 110
memory 120
Communication connection(s) 170
Input device(s) 150
Output device(s) 160
Storage 140
Software 180 implementing post-filter techniques

Figure 1

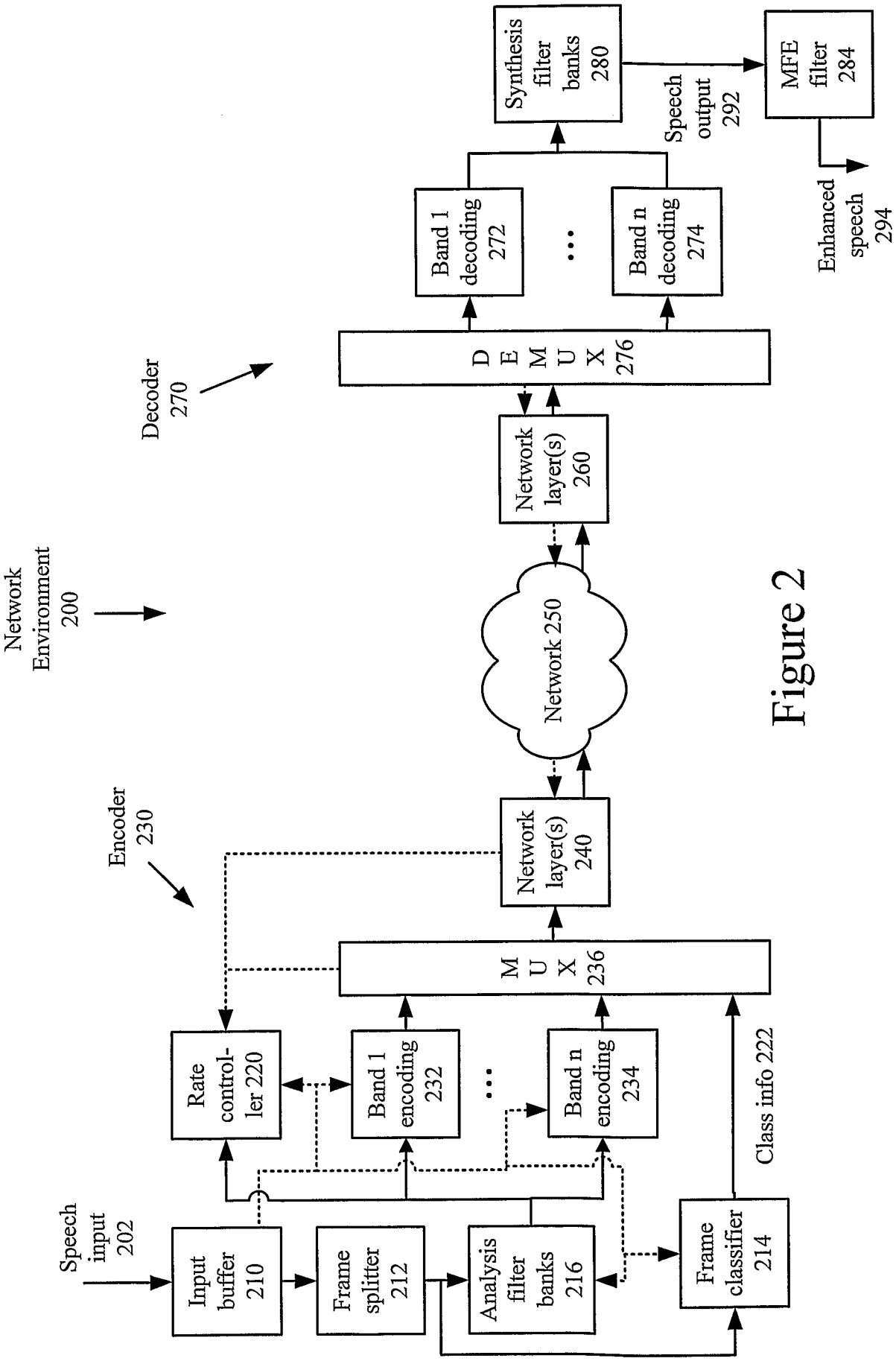
Network Environment 200
Encoder 230
Decoder 270
Speech input 202
Input buffer 210
Frame splitter 212
Analysis filter banks 216
Frame classifier 214
Class info 222
Rate control-ler 220
Band 1 encoding 232
Band n encoding 234
MUX 236
Network layer(s) 240
Network 250
Network layer(s) 260
DEMUX 276
Band 1 decoding 272
Band n decoding 274
Speech output 292
Synthesis filter banks 280
MFE filter 284
Enhanced speech 294

Figure 2

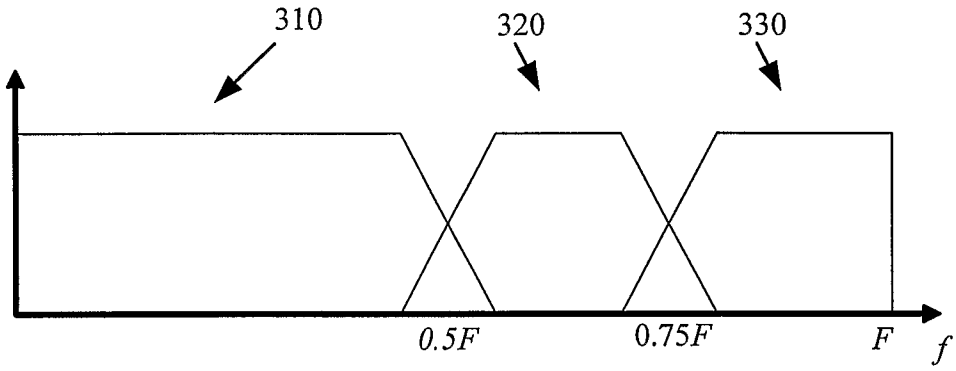

Figure 3

Figure 4

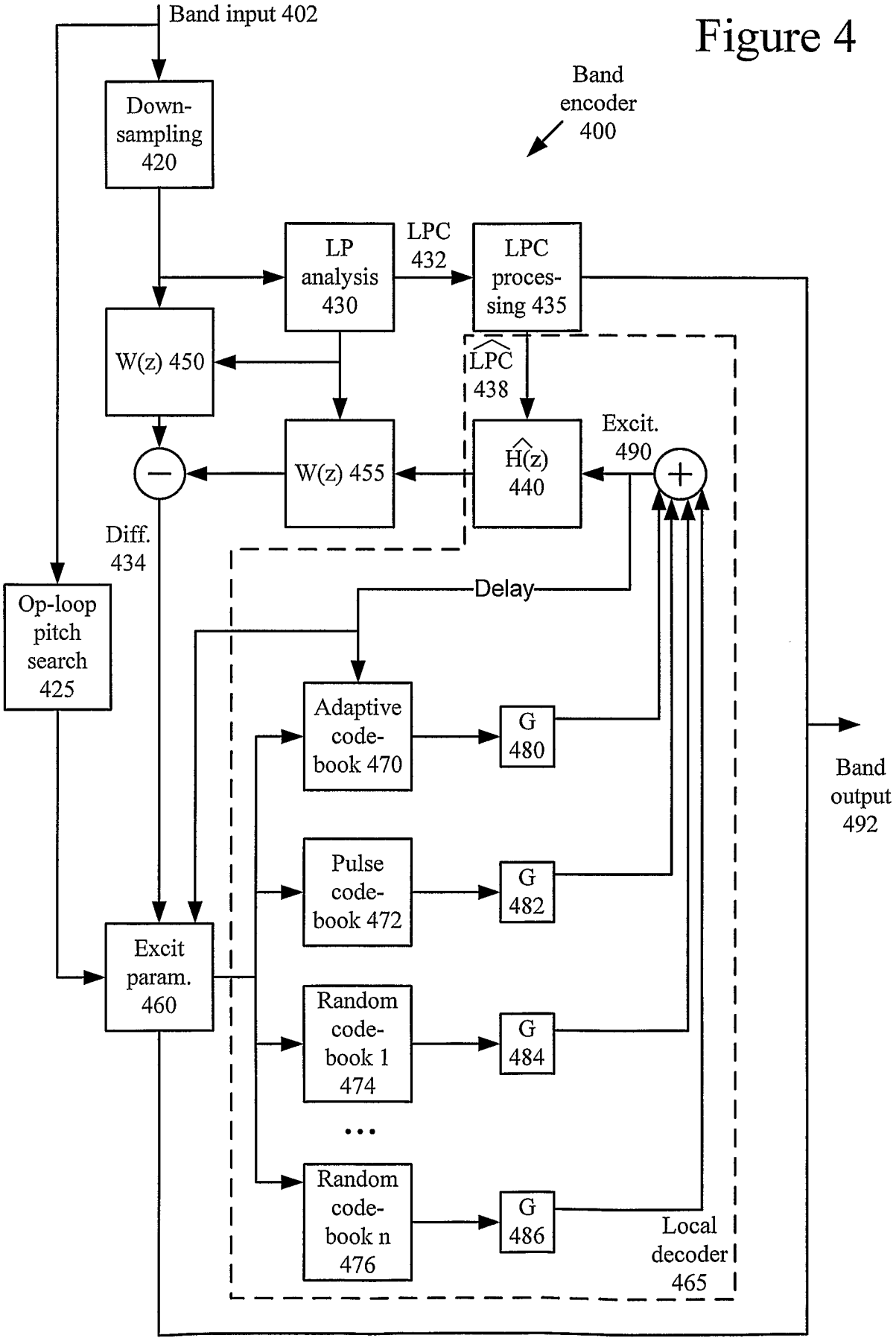
Band input 402
Band encoder 400
Down-sampling 420
LP analysis 430
LPC 432
LPC processing 435
W(z) 450
LPC 438
W(z) 455
H(z) 440
Excit. 490
Diff. 434
Delay
Op-loop pitch search 425
Adaptive code-book 470
G 480
Pulse code-book 472
G 482
Excit param. 460
Random code-book 1 474
G 484
Random code-book n 476
G 486
Local decoder 465
Band output 492

Figure 5

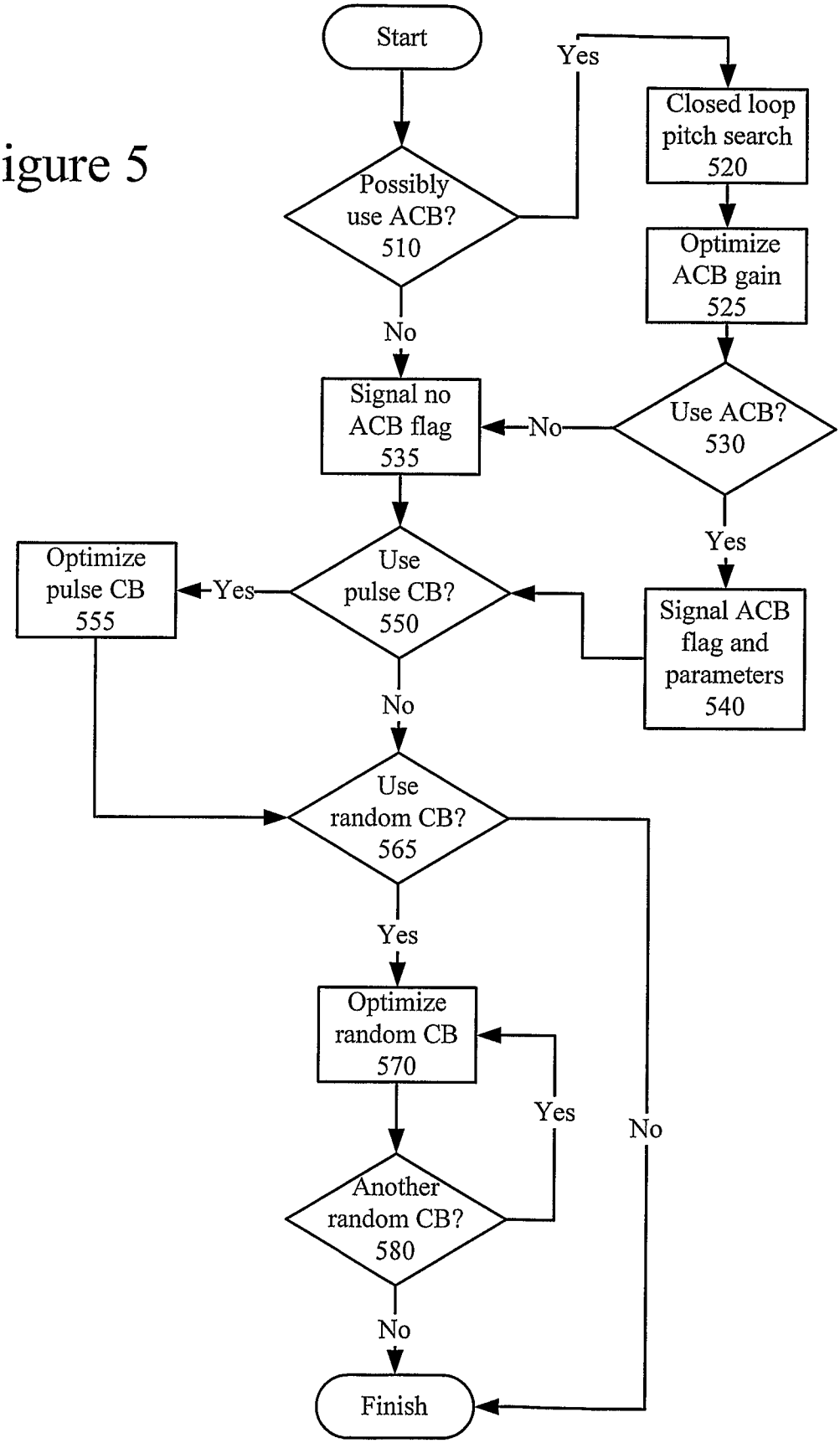
Start
Possibly use ACB? 510
Yes
Closed loop pitch search 520
Optimize ACB gain 525
Use ACB? 530
No
Signal no ACB flag 535
Yes
Signal ACB flag and parameters 540
Use pulse CB? 550
Yes
Optimize pulse CB 555
No
Use random CB? 565
Yes
Optimize random CB 570
Another random CB? 580
Yes
No
No
Finish

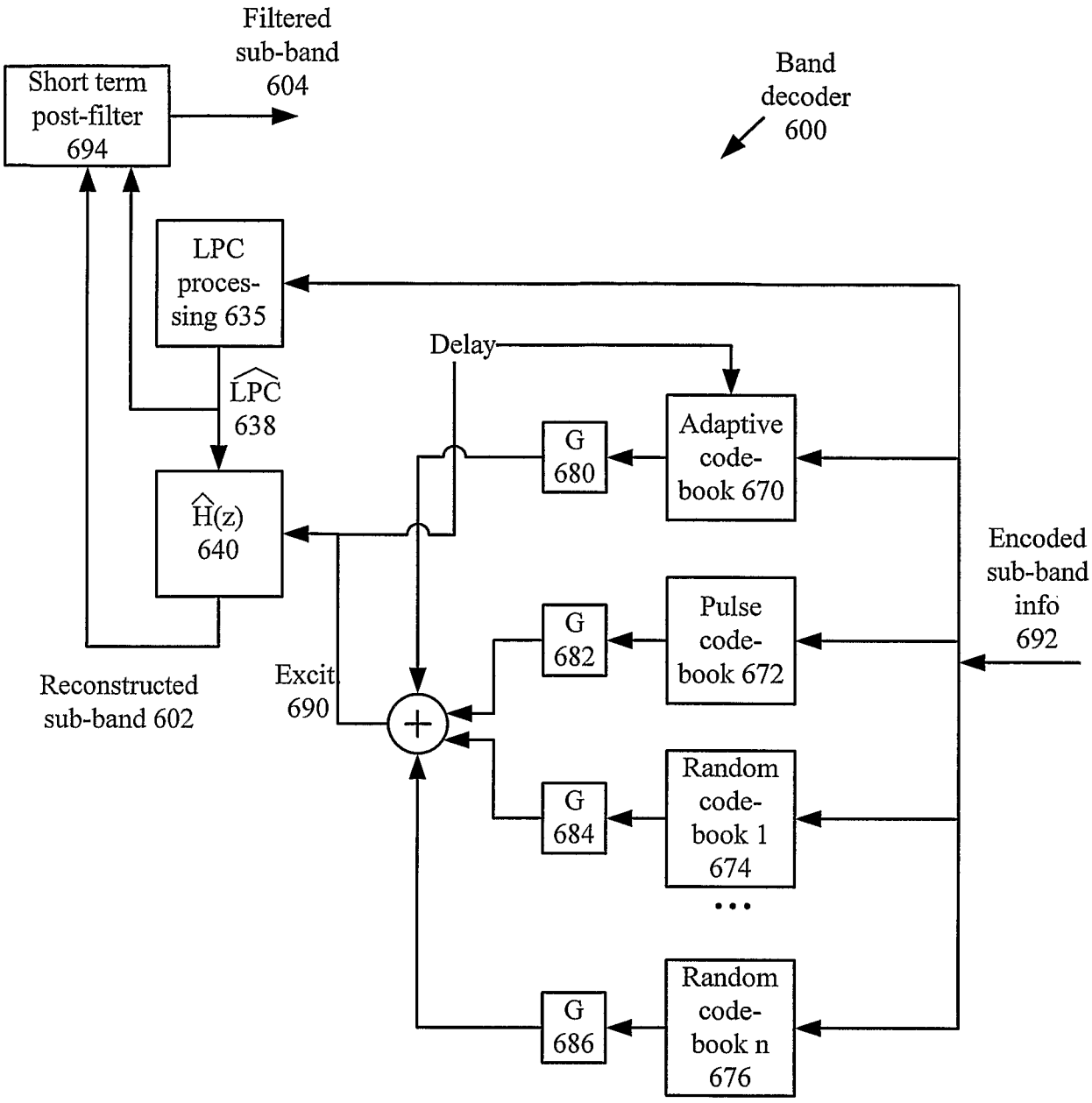
Filtered sub-band 604
Short term post-filter 694
Band decoder 600
LPC proces-sing 635
Delay
LPC 638
G 680
Adaptive code-book 670
H(z) 640
Encoded sub-band info 692
G 682
Pulse code-book 672
Reconstructed sub-band 602
Excit 690
Random code-book 1 674
G 684
Random code-book n 676
G 686

Figure 6

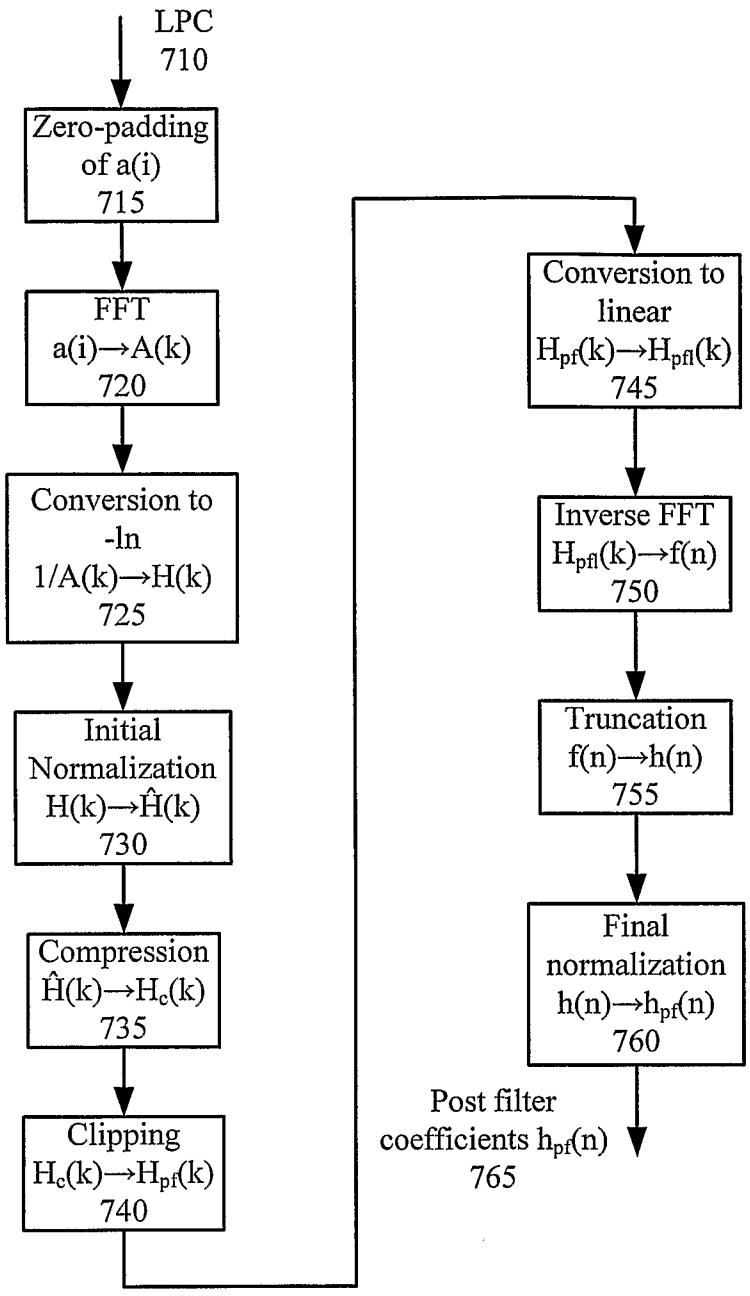
LPC
710
Zero-padding of a(i)
715
FFT
a(i)→A(k)
720
Conversion to -ln
1/A(k)→H(k)
725
Initial Normalization
H(k)→Ĥ(k)
730
Compression
Ĥ(k)→Hc(k)
735
Clipping
Hc(k)→Hpf(k)
740
Conversion to linear
Hpf(k)→Hpfl(k)
745
Inverse FFT
Hpfl(k)→f(n)
750
Truncation
f(n)→h(n)
755
Final normalization
h(n)→hpf(n)
760
Post filter coefficients hpf(n)
765

Figure 7