9803325-1
RPOS COPY

PCT WORLD INTELLECTUAL PROPERTY ORGANIZATION
International Bureau

INTERNATIONAL APPLICATION PUBLISHED UNDER THE PATENT COOPERATION TREATY (PCT)

(51) International Patent Classification 6 : H01R 9/09 — A1

(11) International Publication Number: WO 97/25756

(43) International Publication Date: 17 July 1997 (17.07.97)

(21) International Application Number: PCT/US96/20791

(22) International Filing Date: 31 December 1996 (31.12.96)

(30) Priority Data:

60/009,590	4 January 1996 (04.01.96)	US
Not furnished	30 December 1996 (30.12.96)	US

(81) Designated States: CN, JP, KR, SG, European patent (AT, BE, CH, DE, DK, ES, FI, FR, GB, GR, IE, IT, LU, MC, NL, PT, SE).

Published
With international search report.

(71) Applicant: BERG TECHNOLOGY, INC. [US/US]; One East First Street, Reno, NV 89501 (US).

(72) Inventor: CLARK, Stephen, L.; 380 Beaver Creek Road, Dillsburg, PA 17109 (US).

(74) Agents: LONG, Daniel, J. et al.; 825 Old Trail Road, Etters, PA 17319 (US).

(54) Title: MULTIPLE ROW SURFACE MOUNT CONNECTOR

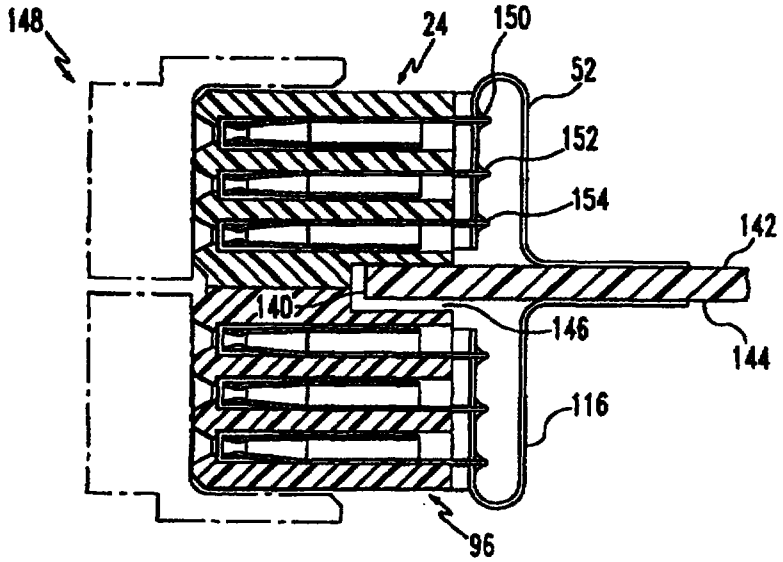

(57) Abstract

Disclosed is an assembly for mounting electrical connectors (24) on an edge of a printed circuit board (PCB) (52). A first elongated connector element (24) having opposed first and second ends is positioned on the one major side of the PCB (52) adjacent the edge. A second elongated connector element (96) having opposed first and second ends and positioned on the other major side of the PCB (52) adjacent the edge of the PCB (52) in side by side relation with said first elongated connector (24). A single fastener (68) simultaneously engages both elongated connector elements (24, 96) and the PCB (52). The fastener (68) may be a pair of blocks which each have a rear groove and ledge combination to engage the PCB (52) and side tongue and groove combination to engage the connector elements.