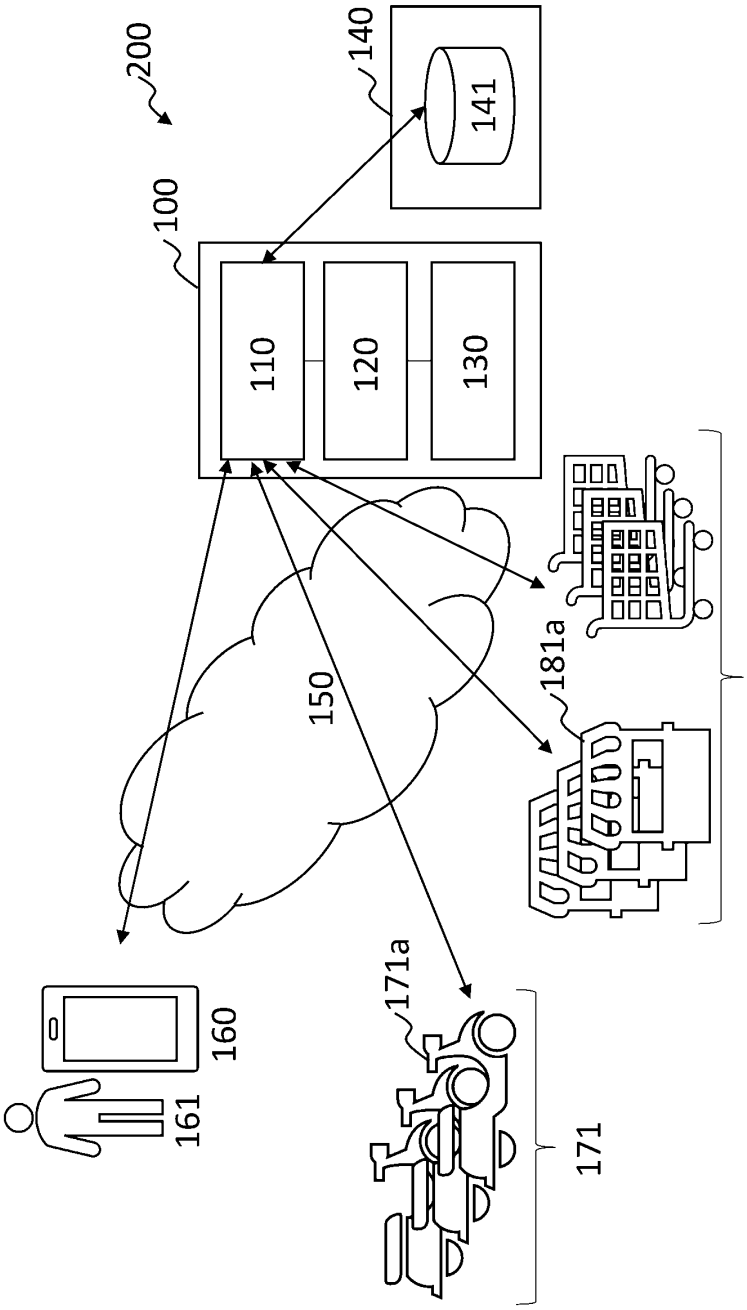

FIG. 1

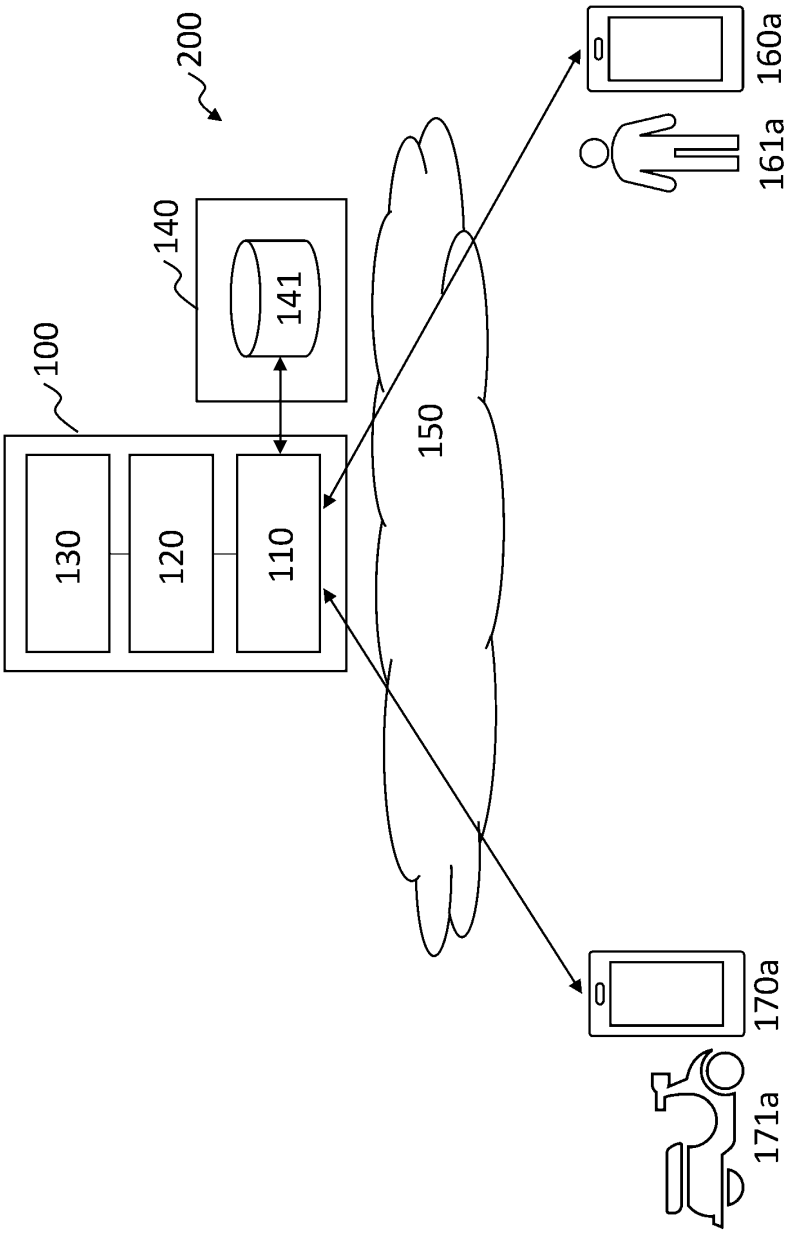

FIG. 2

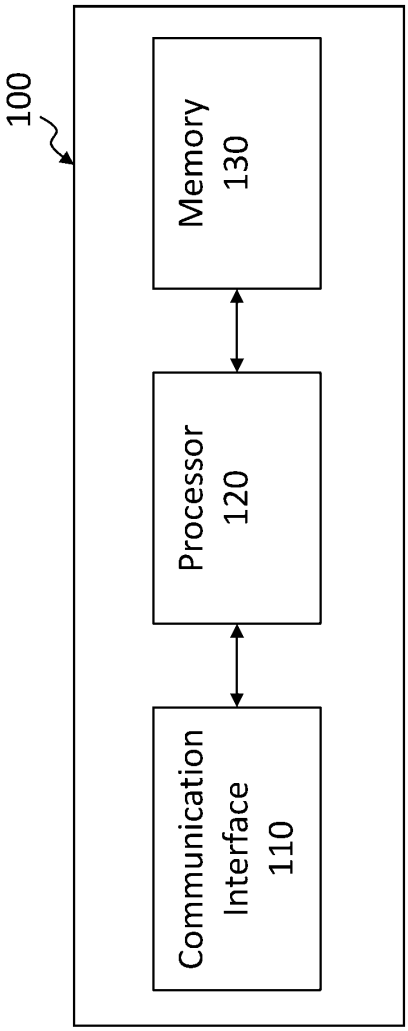

FIG. 3

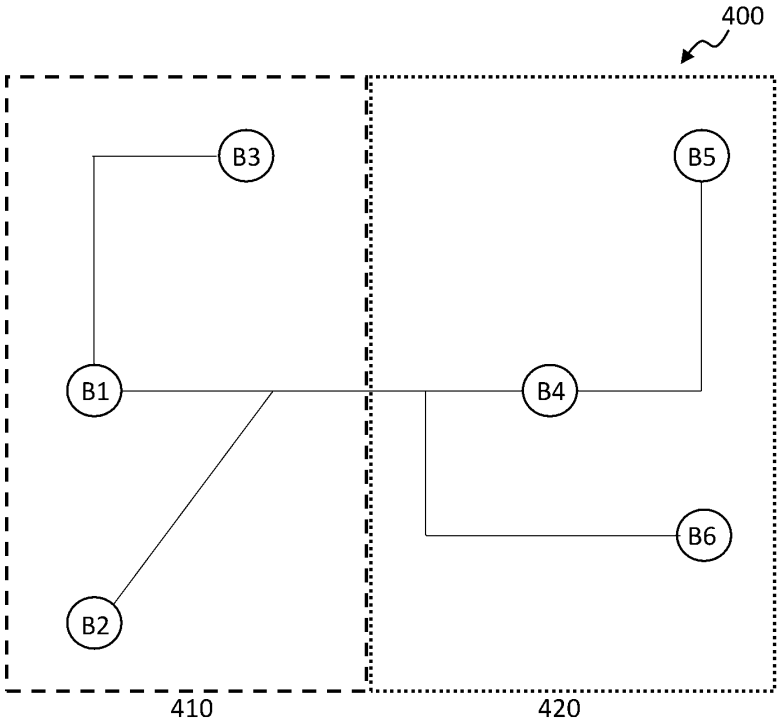

FIG. 4

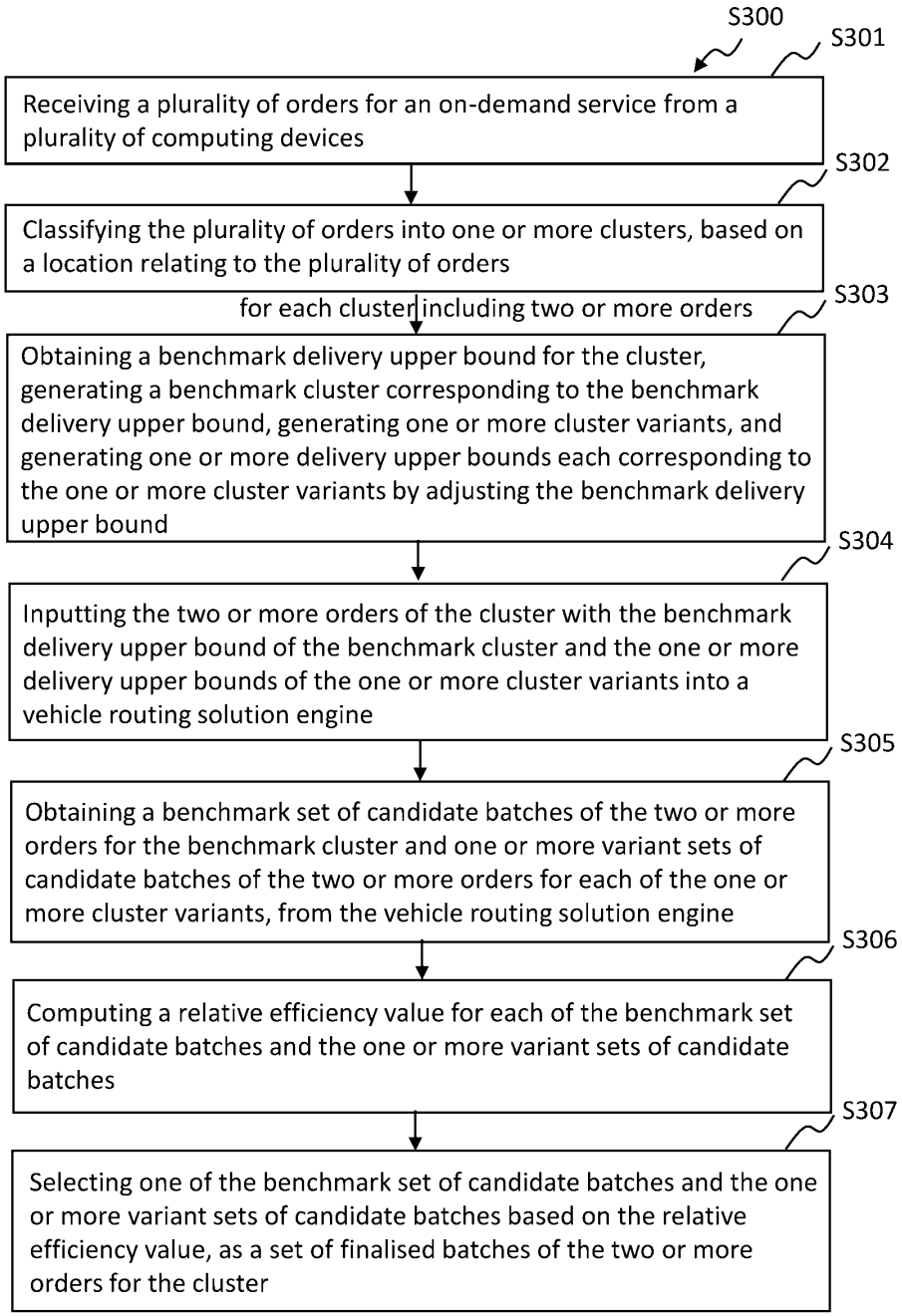
S300
S301
Receiving a plurality of orders for an on-demand service from a plurality of computing devices
S302
Classifying the plurality of orders into one or more clusters, based on a location relating to the plurality of orders
for each cluster including two or more orders
S303
Obtaining a benchmark delivery upper bound for the cluster, generating a benchmark cluster corresponding to the benchmark delivery upper bound, generating one or more cluster variants, and generating one or more delivery upper bounds each corresponding to the one or more cluster variants by adjusting the benchmark delivery upper bound
S304
Inputting the two or more orders of the cluster with the benchmark delivery upper bound of the benchmark cluster and the one or more delivery upper bounds of the one or more cluster variants into a vehicle routing solution engine
S305
Obtaining a benchmark set of candidate batches of the two or more orders for the benchmark cluster and one or more variant sets of candidate batches of the two or more orders for each of the one or more cluster variants, from the vehicle routing solution engine
S306
Computing a relative efficiency value for each of the benchmark set of candidate batches and the one or more variant sets of candidate batches
S307
Selecting one of the benchmark set of candidate batches and the one or more variant sets of candidate batches based on the relative efficiency value, as a set of finalised batches of the two or more orders for the cluster

FIG. 5

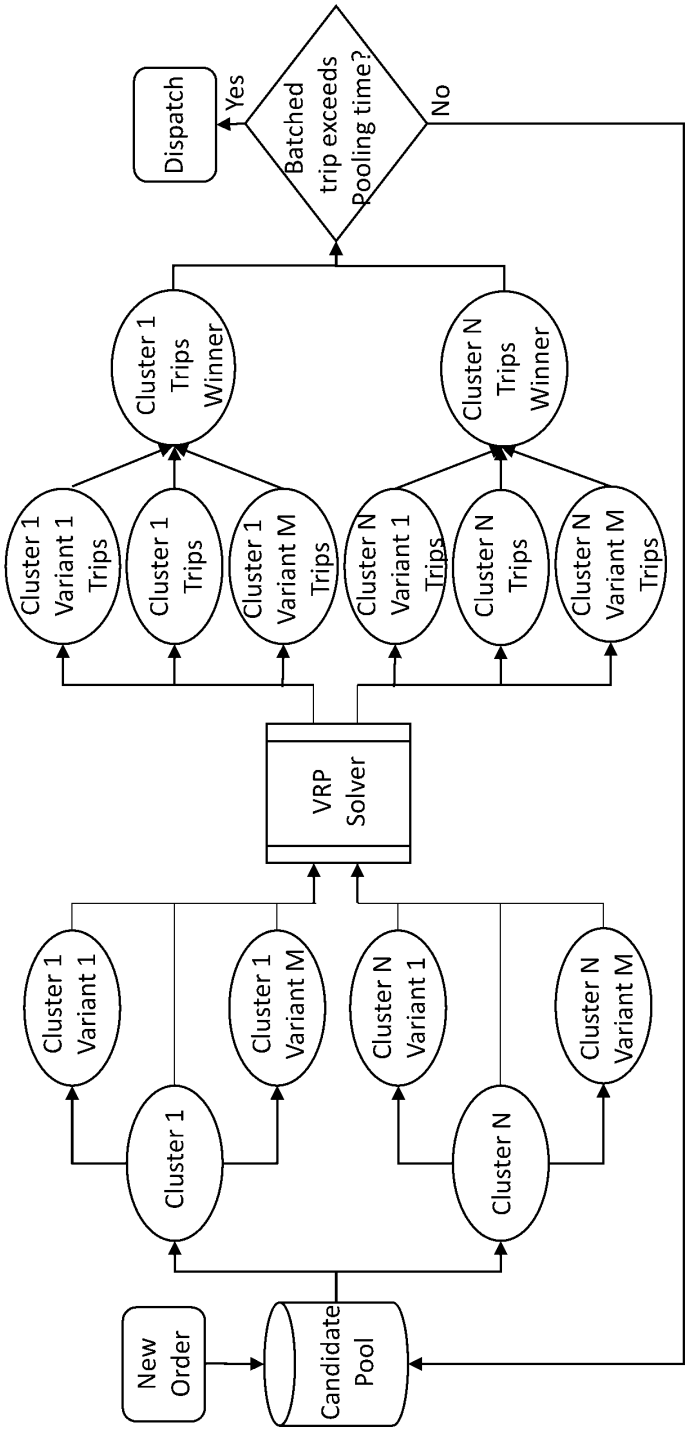
New Order
Candidate Pool
Cluster 1
Cluster N
Cluster 1 Variant 1
Cluster 1 Variant M
Cluster N Variant 1
Cluster N Variant M
VRP Solver
Cluster 1 Variant 1 Trips
Cluster 1 Trips
Cluster 1 Variant M Trips
Cluster N Variant 1 Trips
Cluster N Trips
Cluster N Variant M Trips
Cluster 1 Trips Winner
Cluster N Trips Winner
Batched trip exceeds Pooling time?
Yes
No
Dispatch

FIG. 6