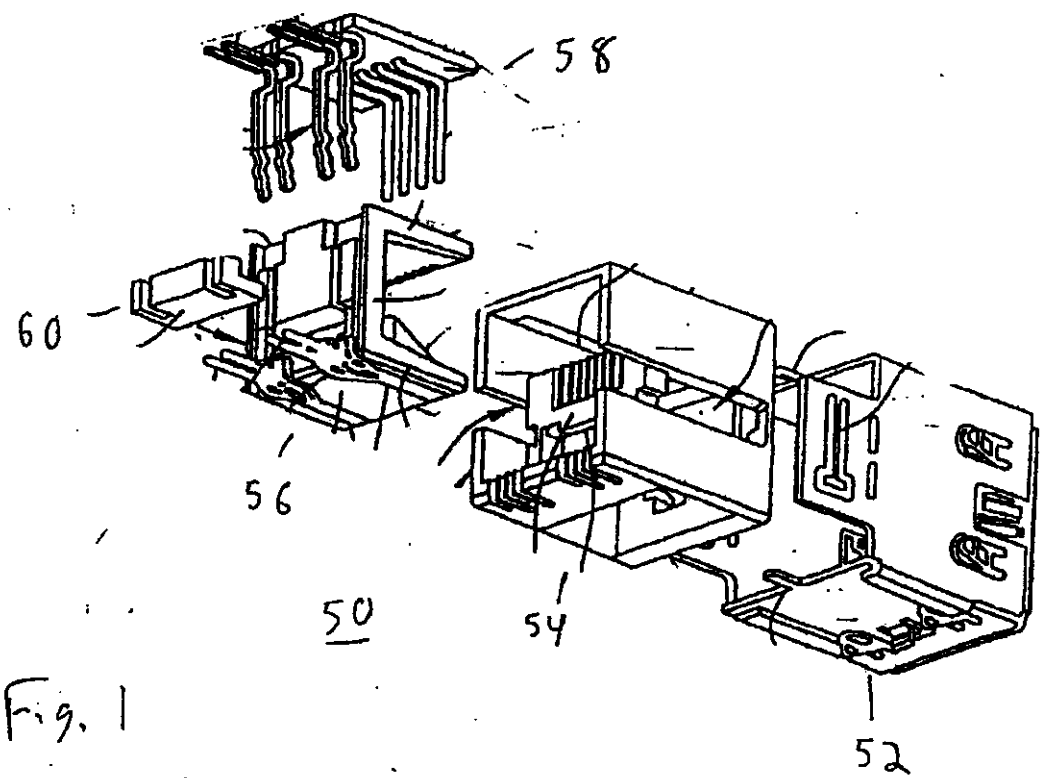

Fig. 1

- Prior Art -

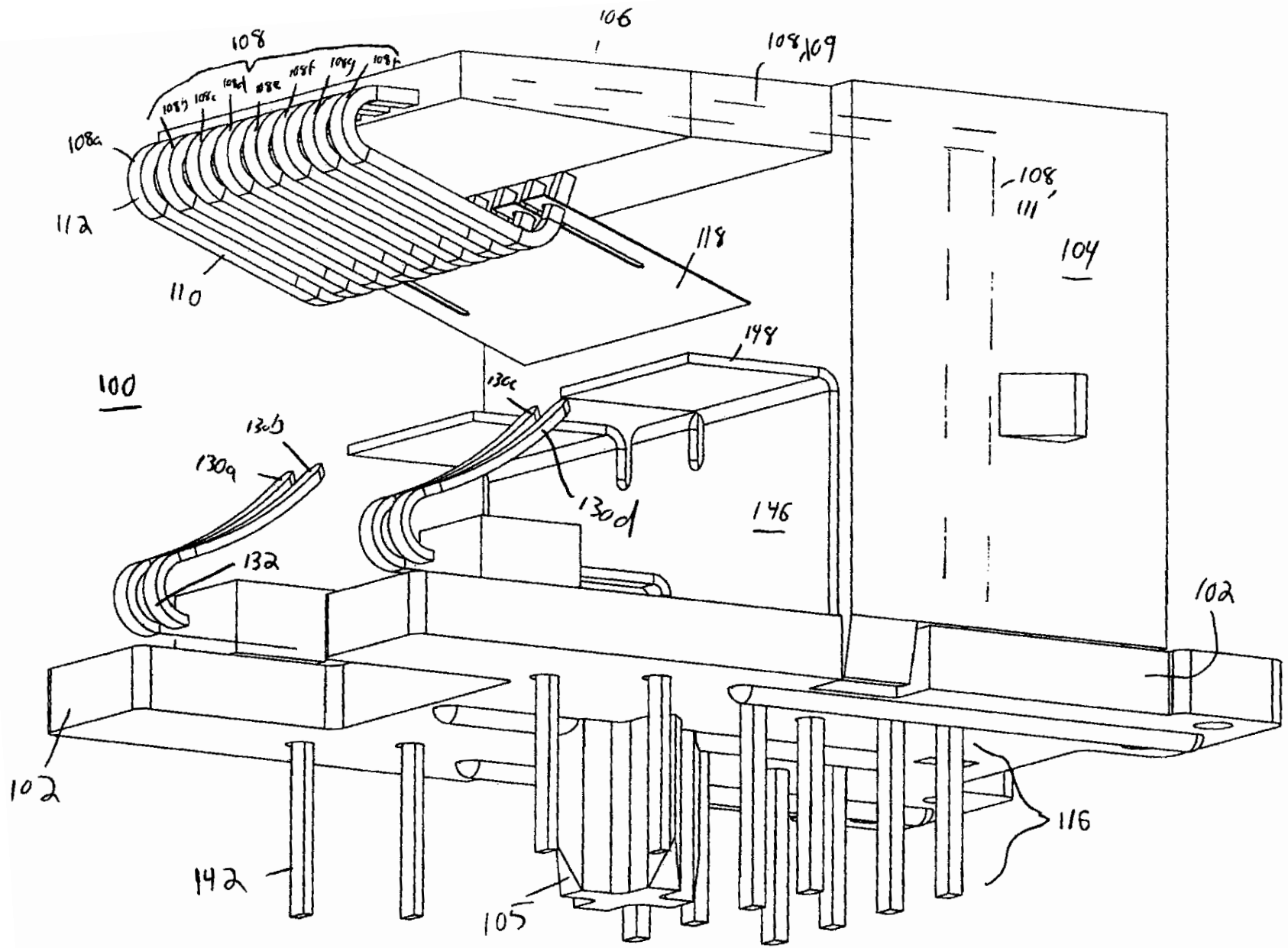
106
108
108,109
108a
108b
108c
108d
108e
108f
108g
108h
112
110
118
108
111
104
148
100
130c
130b
130a
130d
146
132
102
102
116
142
105

FIG. 2

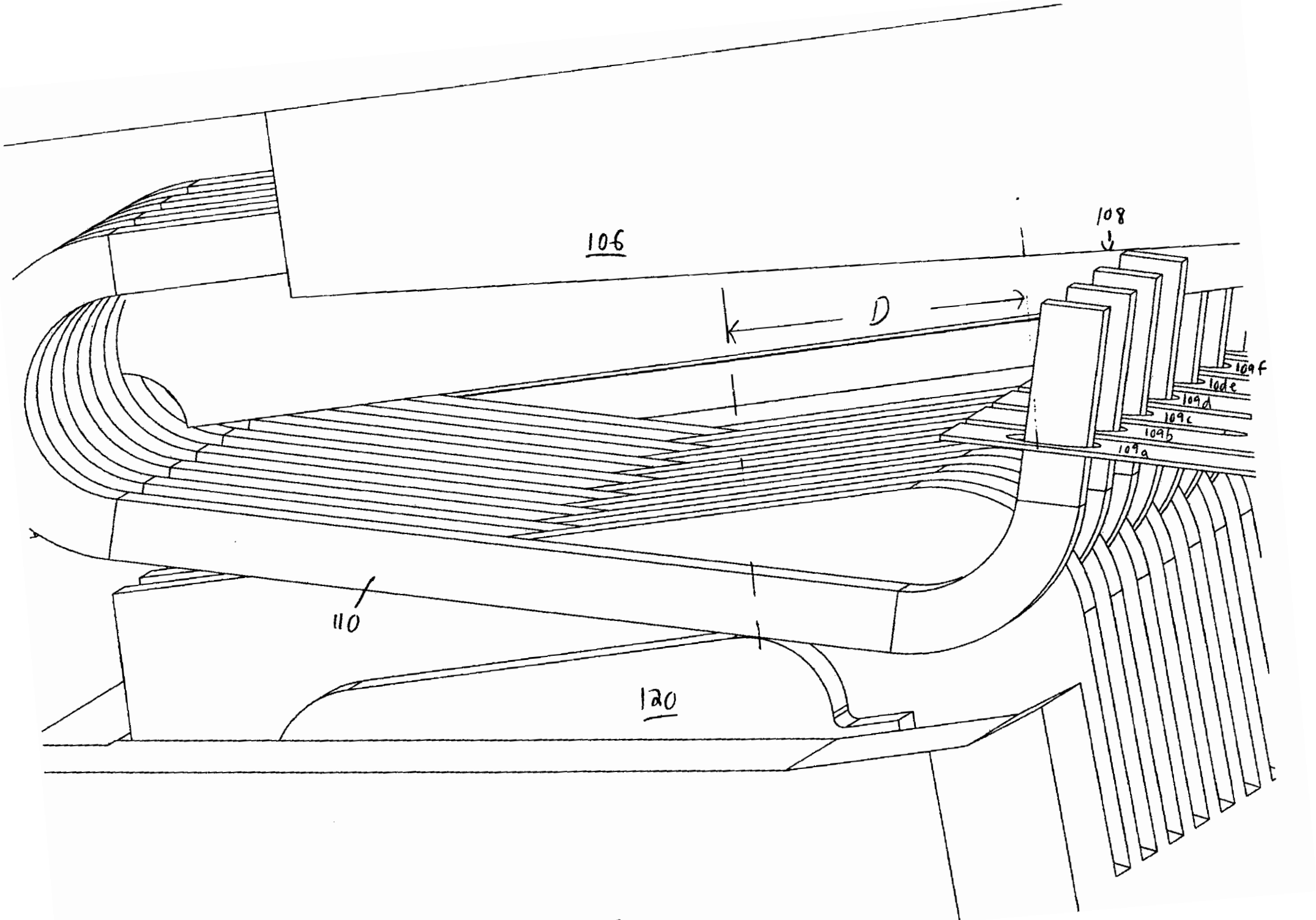

FIG. 3

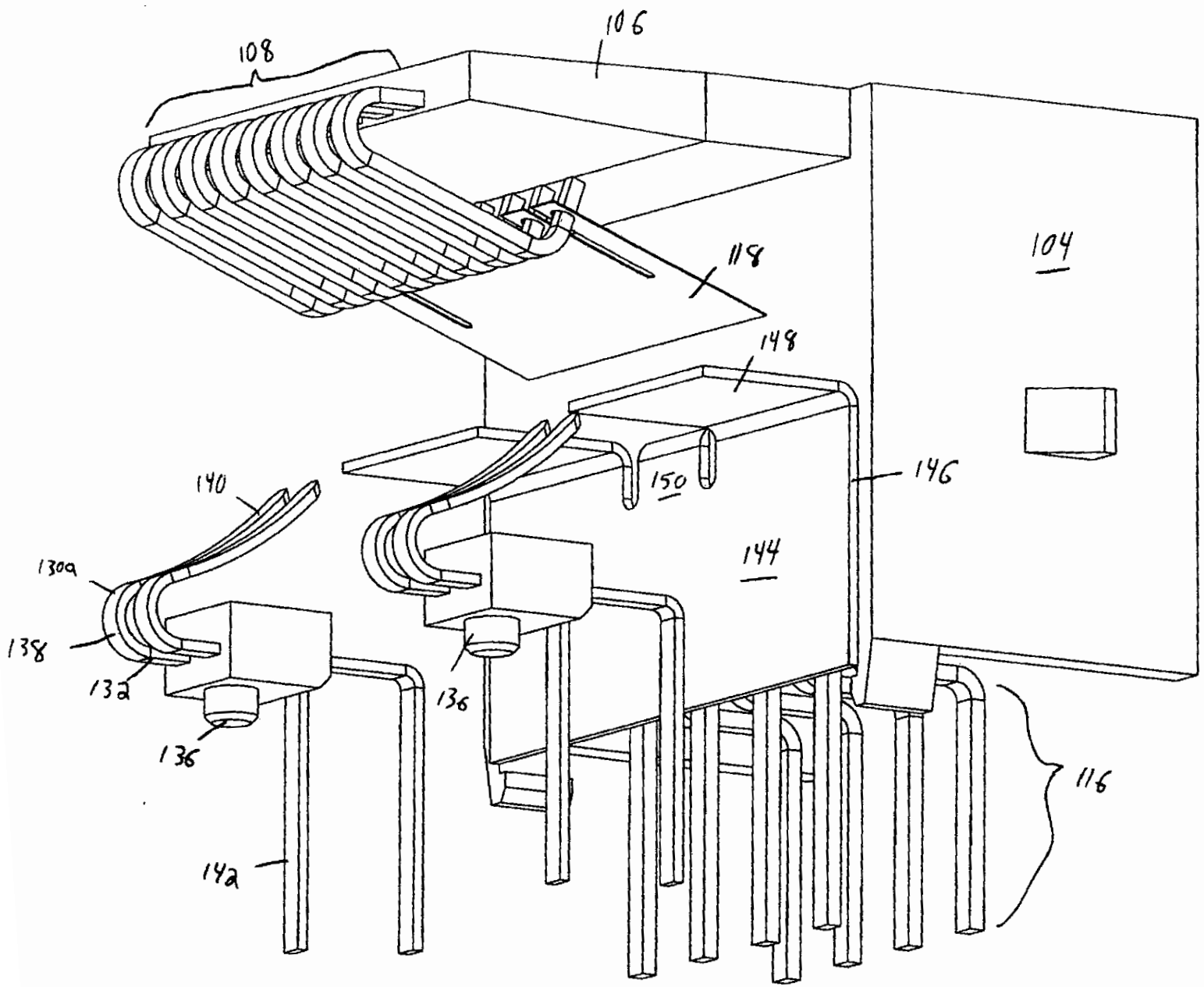

FIG. 4

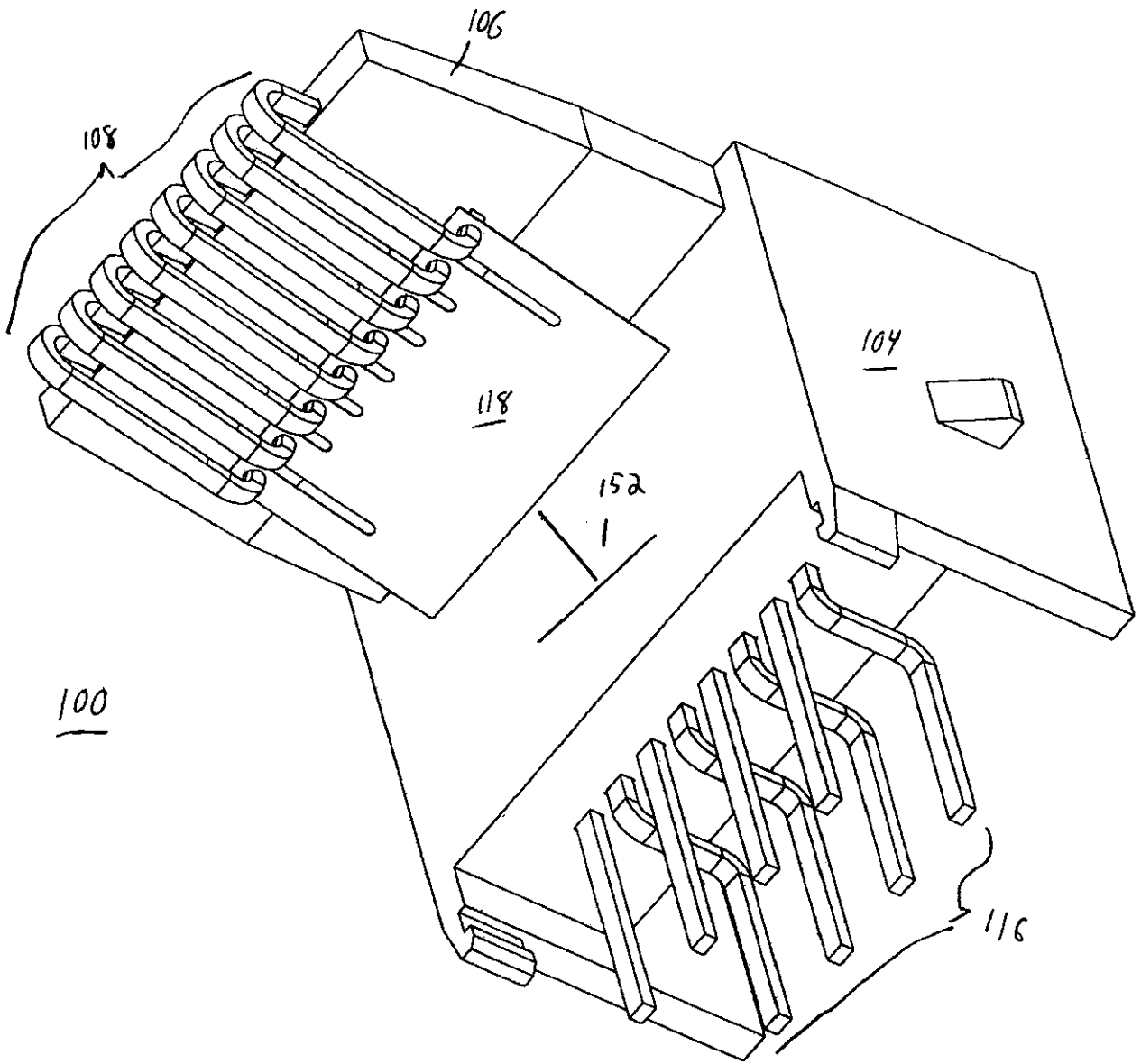

FIG. 5

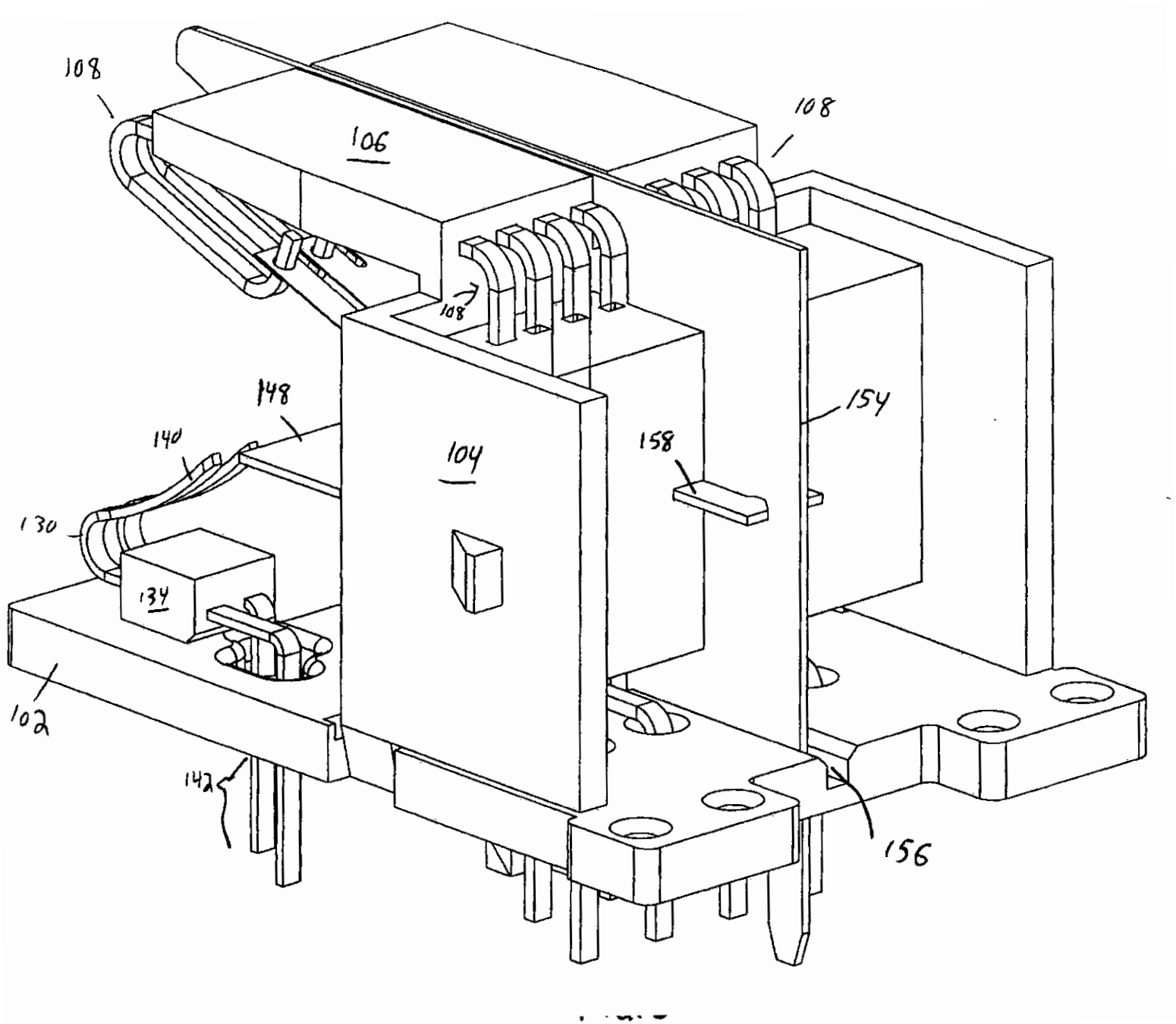
108
106
108
108
148
154
140
104
158
130
134
102
142
156

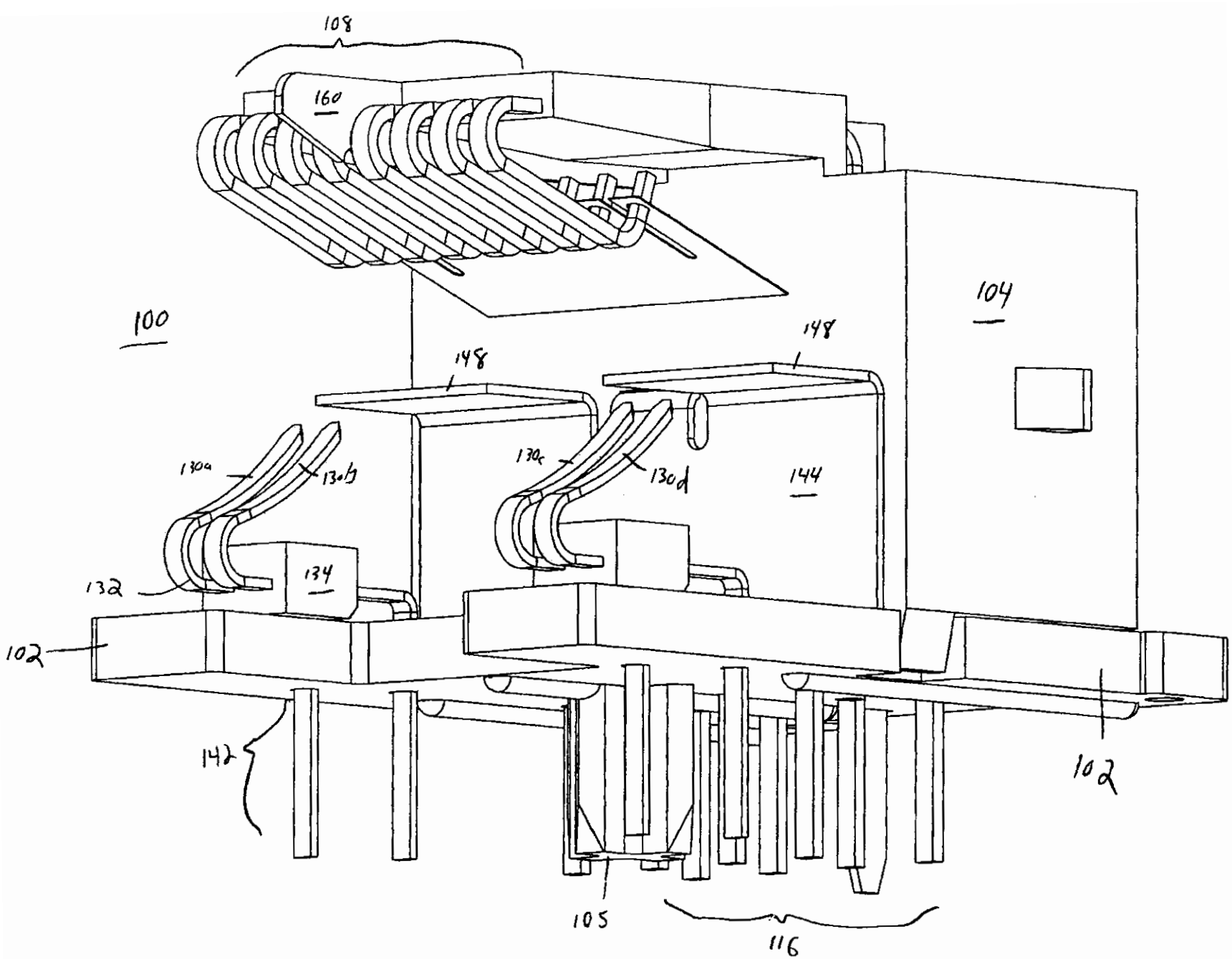
108
160
100
104
148
148
130a
130b
130c
130d
144
132
134
102
142
102
105
116

FIG. 7

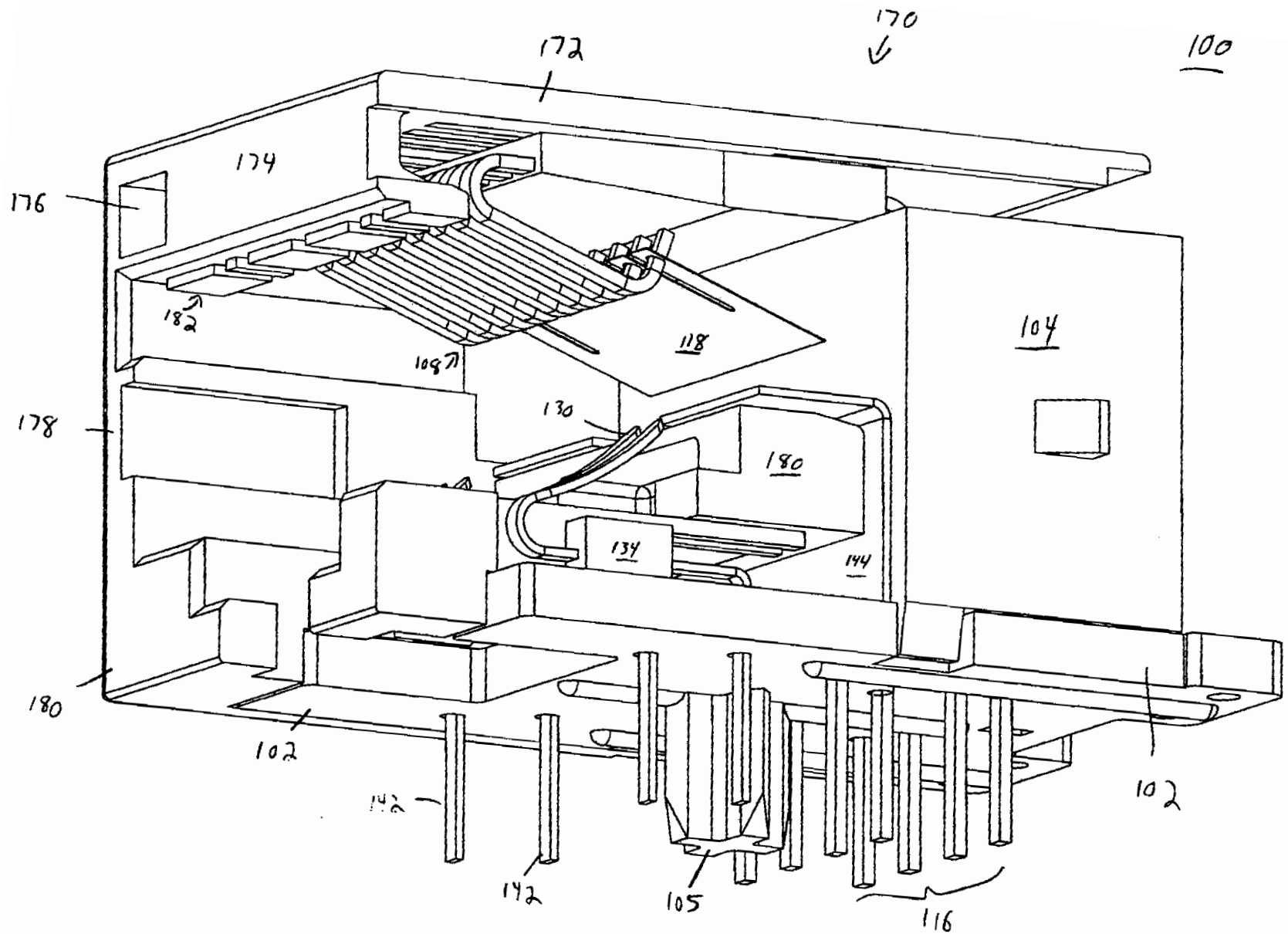
170
172
100
174
176
182
118
104
108
178
130
180
134
144
180
102
142
105
116
102

FIG. 8

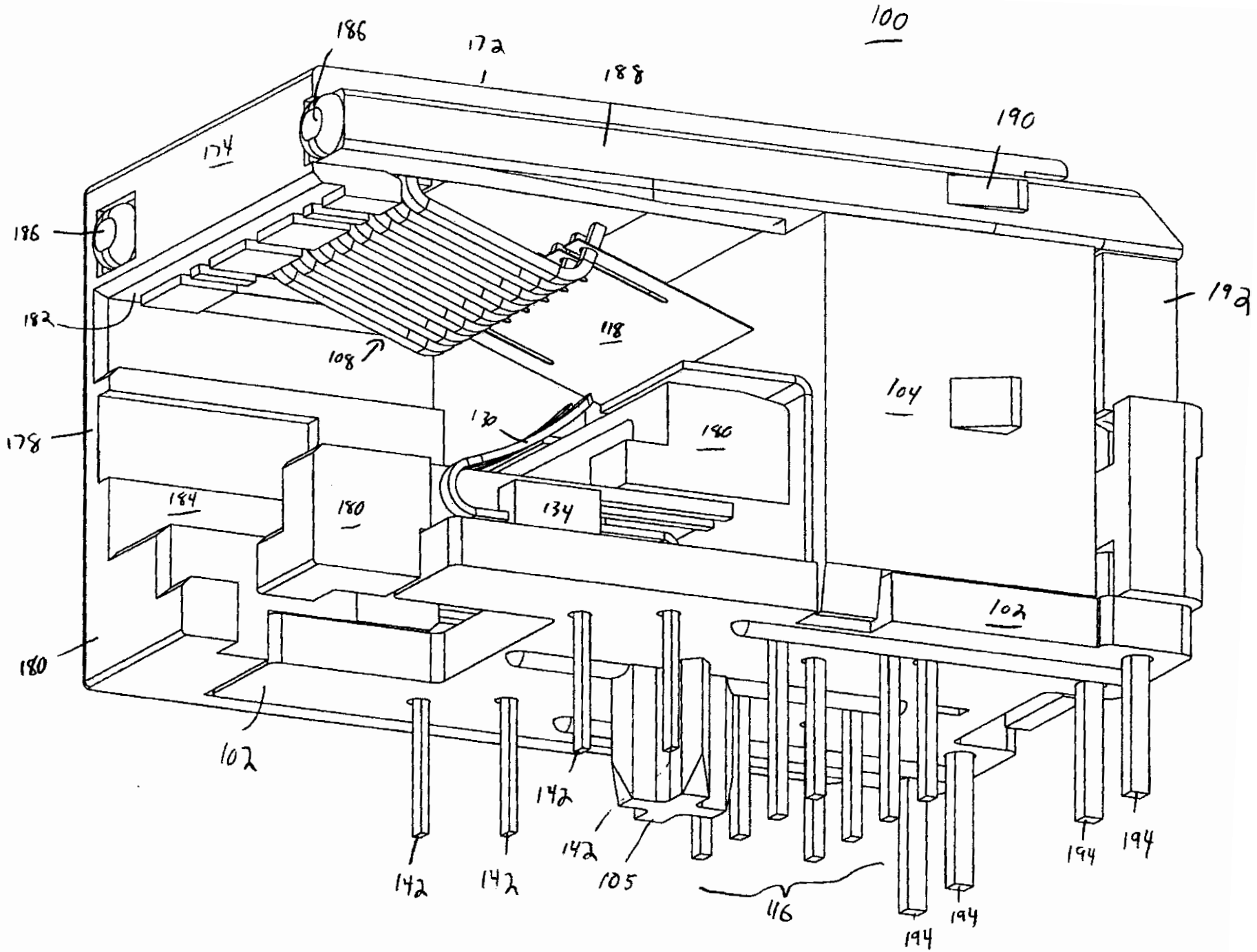
100
186
172
188
190
174
186
182
108
118
192
104
178
130
180
184
180
134
102
180
102
142
142
142
142
105
116
194
194
194
194

FIG. 9

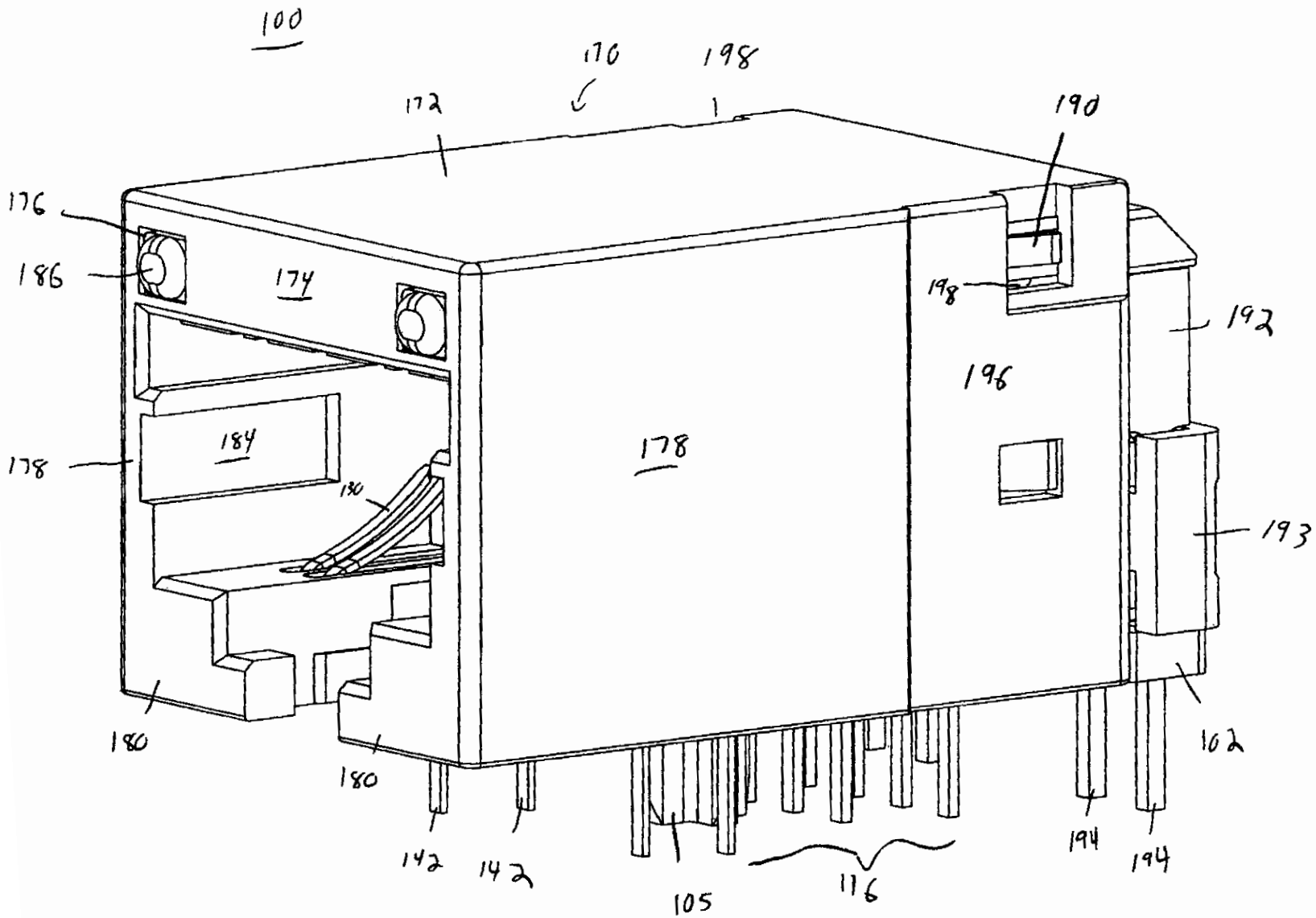
100
170
198
172
190
176
186
174
198
192
196
178
184
178
180
193
180
180
102
142
142
105
116
194
194

FIG. 10

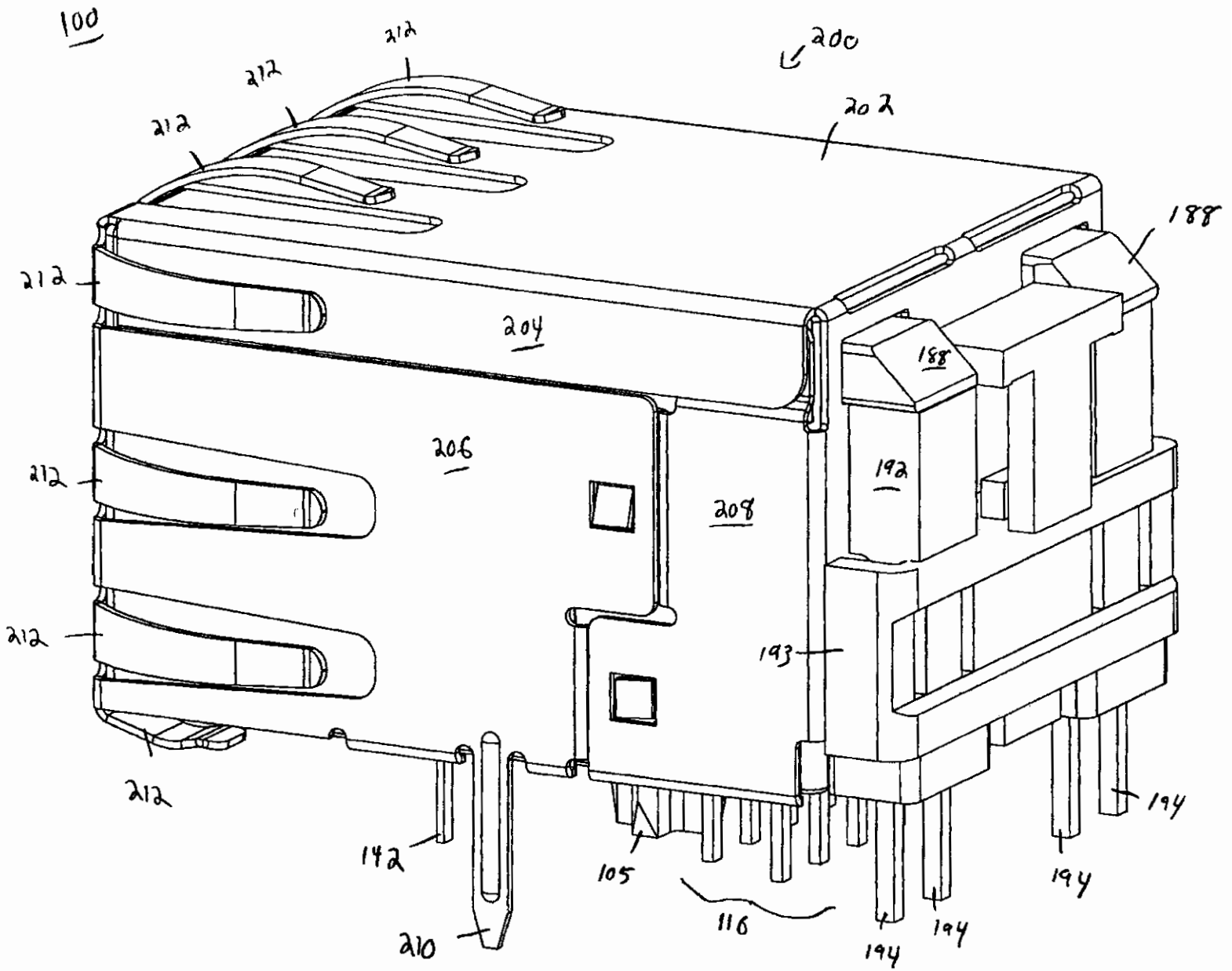
100
200
202
212
212
212
212
212
212
188
188
204
206
208
192
193
142
105
116
210
194
194
194
194

FIG. 11

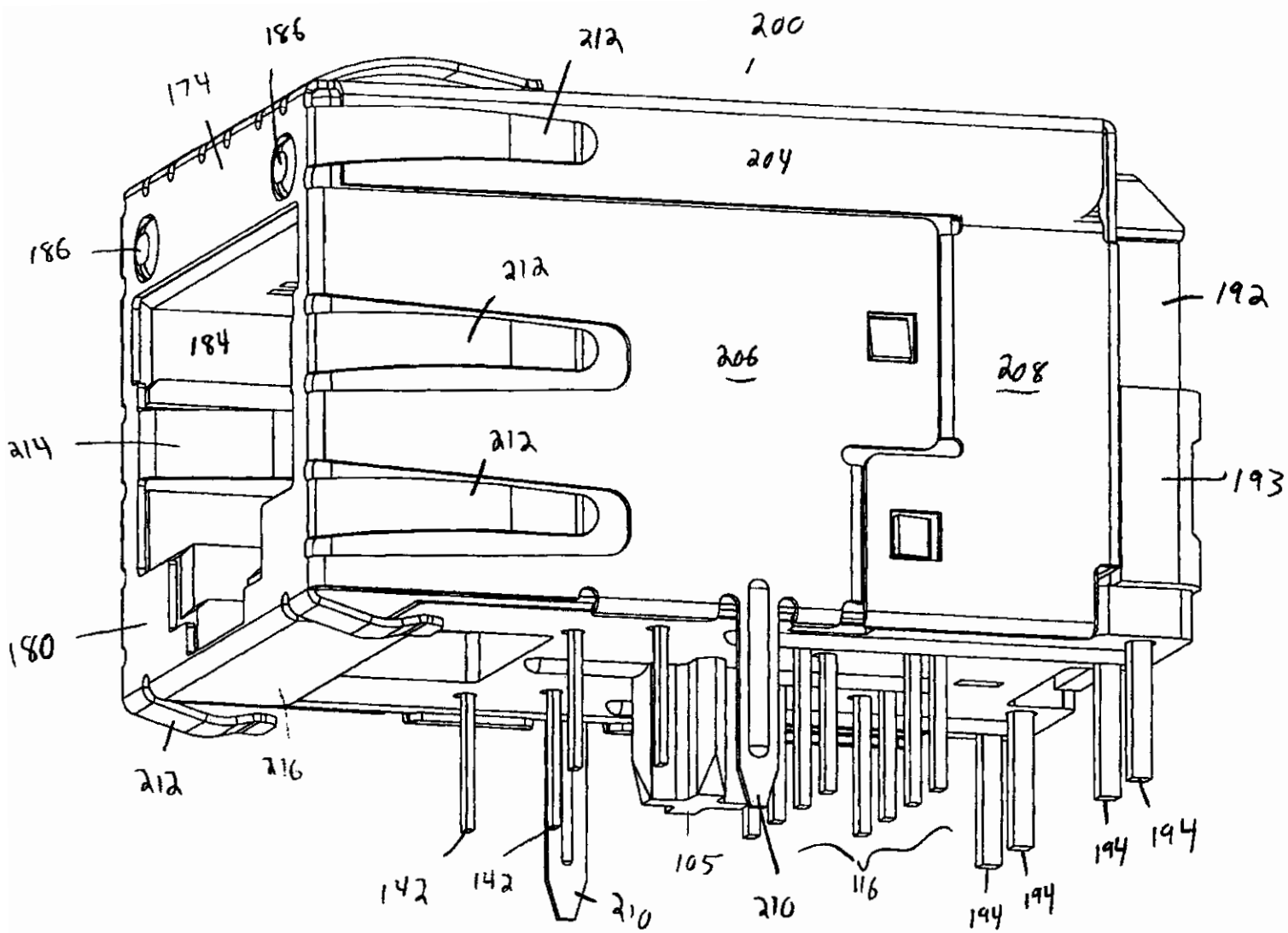
186
174
212
200
204
186
212
184
206
208
192
214
212
193
180
212
216
142
142
210
105
210
116
194
194
194
194

FIG. 12

Fig. 13

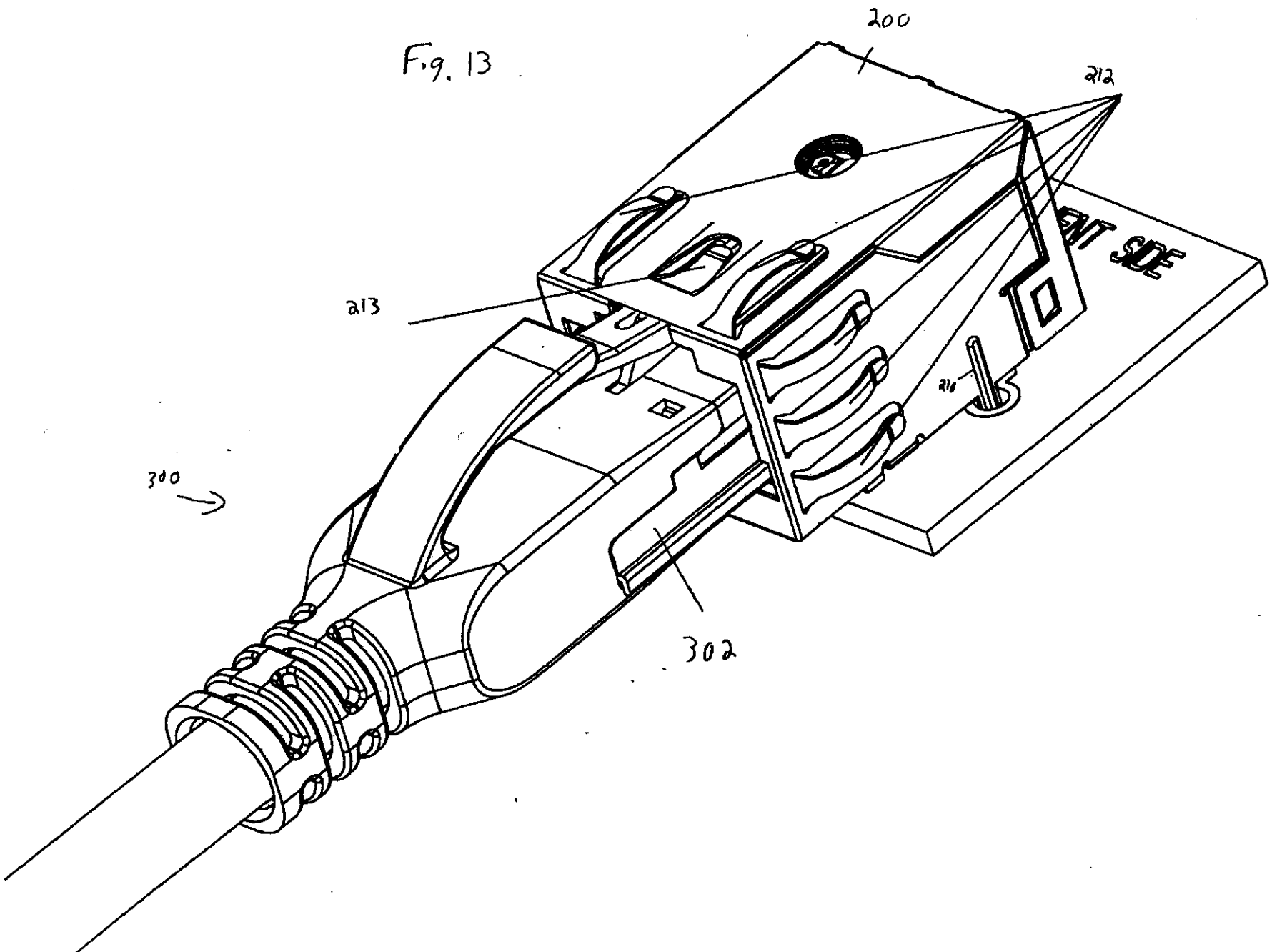

Fig. 14

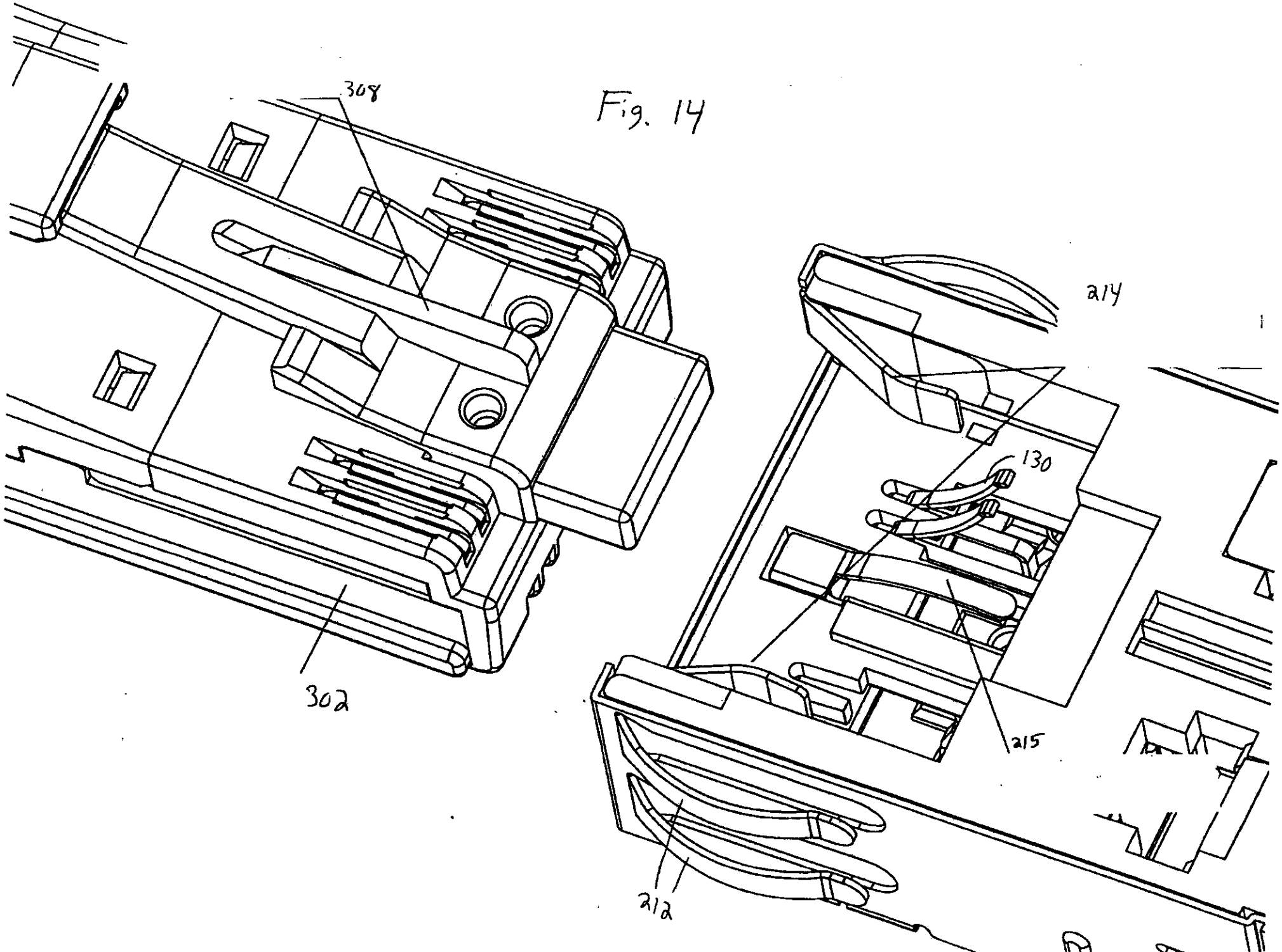

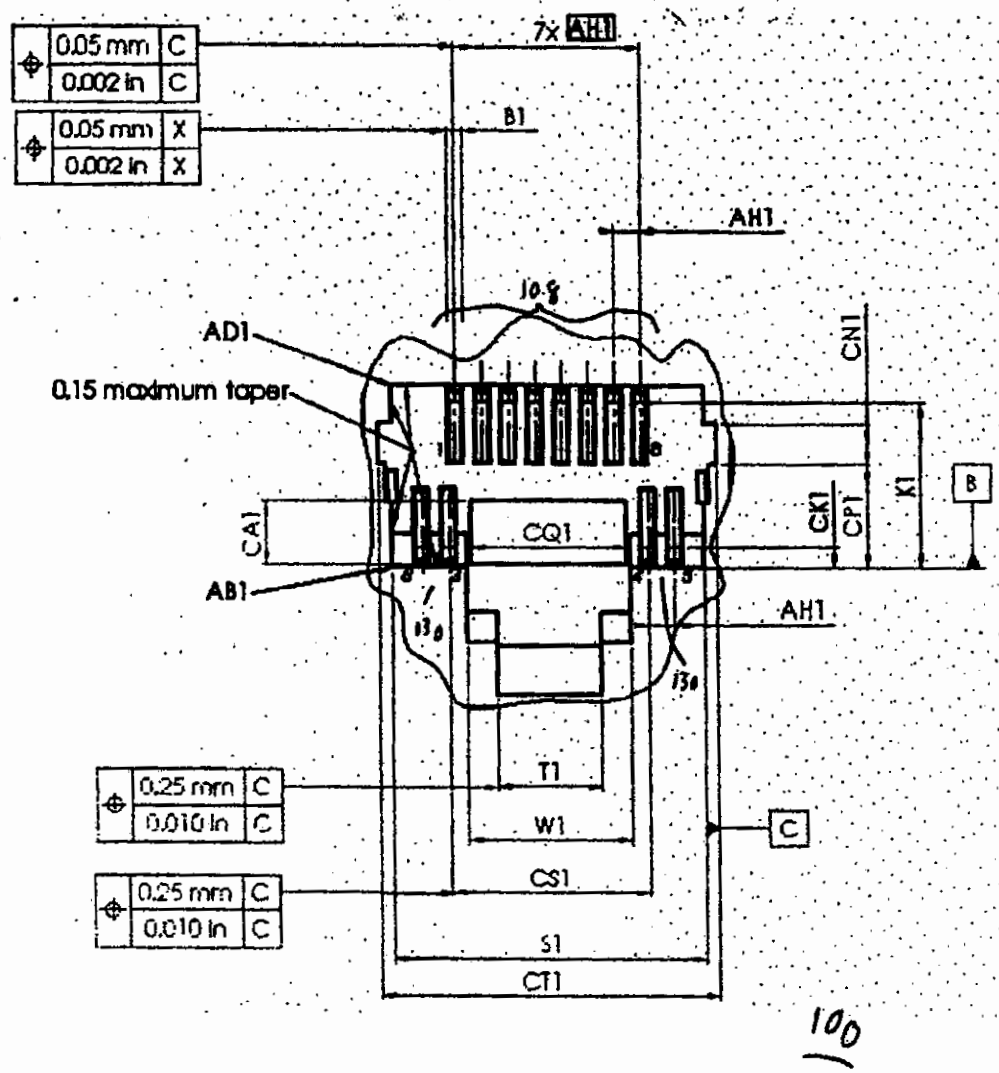
0.05 mm C
0.002 in C
0.05 mm X
0.002 in X
7x AH1
B1
AH1
AD1
0.15 maximum taper
CN1
CK1
CP1
K1
B
CA1
CQ1
AB1
AH1
0.25 mm C
0.010 in C
T1
W1
C
0.25 mm C
0.010 in C
CS1
S1
CT1
100

Fig. 15

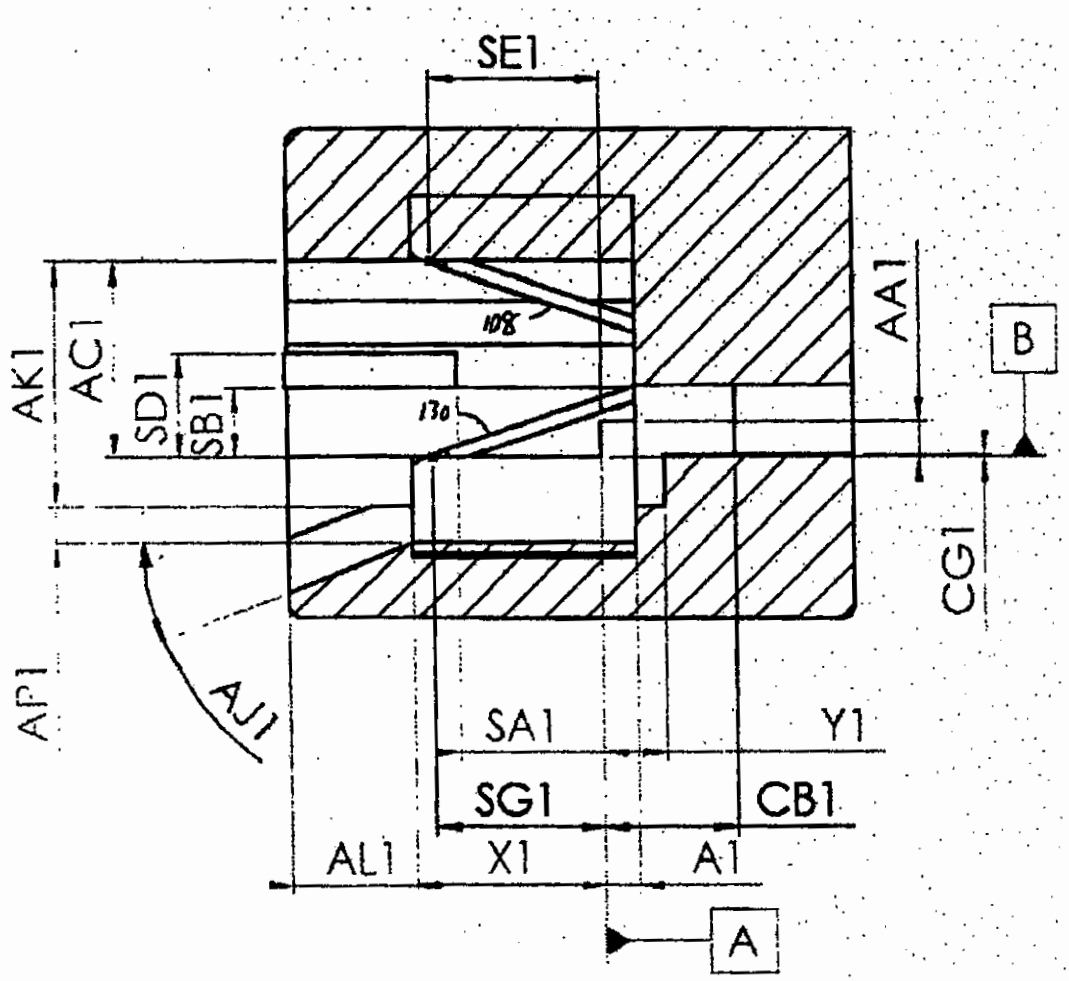
SE1
AK1
AC1
SD1
SB1
108
130
AA1
B
CG1
AP1
AJ1
SA1
Y1
SG1
CB1
AL1
X1
A1
A

Fig. 16

100

Letter	Maximum	Minimum	Nominal
	mm	mm	mm
A1		1,47	
B1	0,71		
K1[a]	5,84		
S1	12,04	11,84	11,94
T1	4,19	3,94	
W1	6,38	6,22	
X1	6,86	6,68	
Y1		2,34	
AA1[b]	1,24		
AB1	0,38		
AC1	6,96	6,76	6,86
AD1	0,13		
AH1[g]			1.02

Fig. 17

Letter	Maximum	Minimum	Nominal
	mm	mm	mm
A1		1,47	
B1	0,71		
K1[a]	5,84		
S1	12,04	11,84	11,94
T1	4,19	3,94	
W1	6,38	6,22	
X1	6,86	6,68	
Y1		2,34	
AA1[b]	1,24		
AB1	0,38		
AC1	6,96	6,76	6,86
AD1	0,13		
AH1[g]			1.02
AK1	8,86	8,38	
AL1[c]		1,40	
AP1[f]		1,27	
CA1	2,30	2,20	
CG1	0,10		
CK1[e]		0,65	
CN1	1,40	1,30	
CP1	5,05	4,95	

Letter	Maximum	Minimum	Nominal
	mm	mm	mm
CQ1	6,00	5,80	
CS1			7,66
CT1	13,0	12,9	
SA1		5,31	
SB1		2,16	
SD1	4,90		
SE1[d]	5,80		
SG1[e, f]	5,80		
Letter			
AJ1 angle			15°

Notes
a. K1, CK1: Contact Zone. Contacts shall be completely within their individual contact zone in the area indicated.
b. AA1: Preferred male free connector stop
c. AL1: Front surface need not be planar or coincident with the surface below the locking device as long as insertion, latching and unlatching of free connectors is not inhibited. Projections beyond AL1 dimension shall not prevent finger access to the free connector locking (coupling) device.
d. SE1: Maximum forward extension of contacts below surface AC1, to avoid contact with shields of free connectors. Applies in the mated state.
e. SG1: Maximum forward extension of contacts below surface Reference Plane B, to avoid contact with shields of free connectors. Applies in the mated state.
f. SG1: When this dimension is greater than 2.5 mm, and the fixed connector is mated with a IEC 60603-7-1,2,3,4,5 free connector, switch option 2 should be utilised, to maintain the clearance requirement between signal conductors 6',3',4',5' of the fixed connector and the screen of this free connector. Note that SG1 is 0.0 mm in the mated state with this IEC 60603-7-1,2,3,4,5 free connector.
g. AP1: Flat surface
h. AH1: True position

Fig. 18

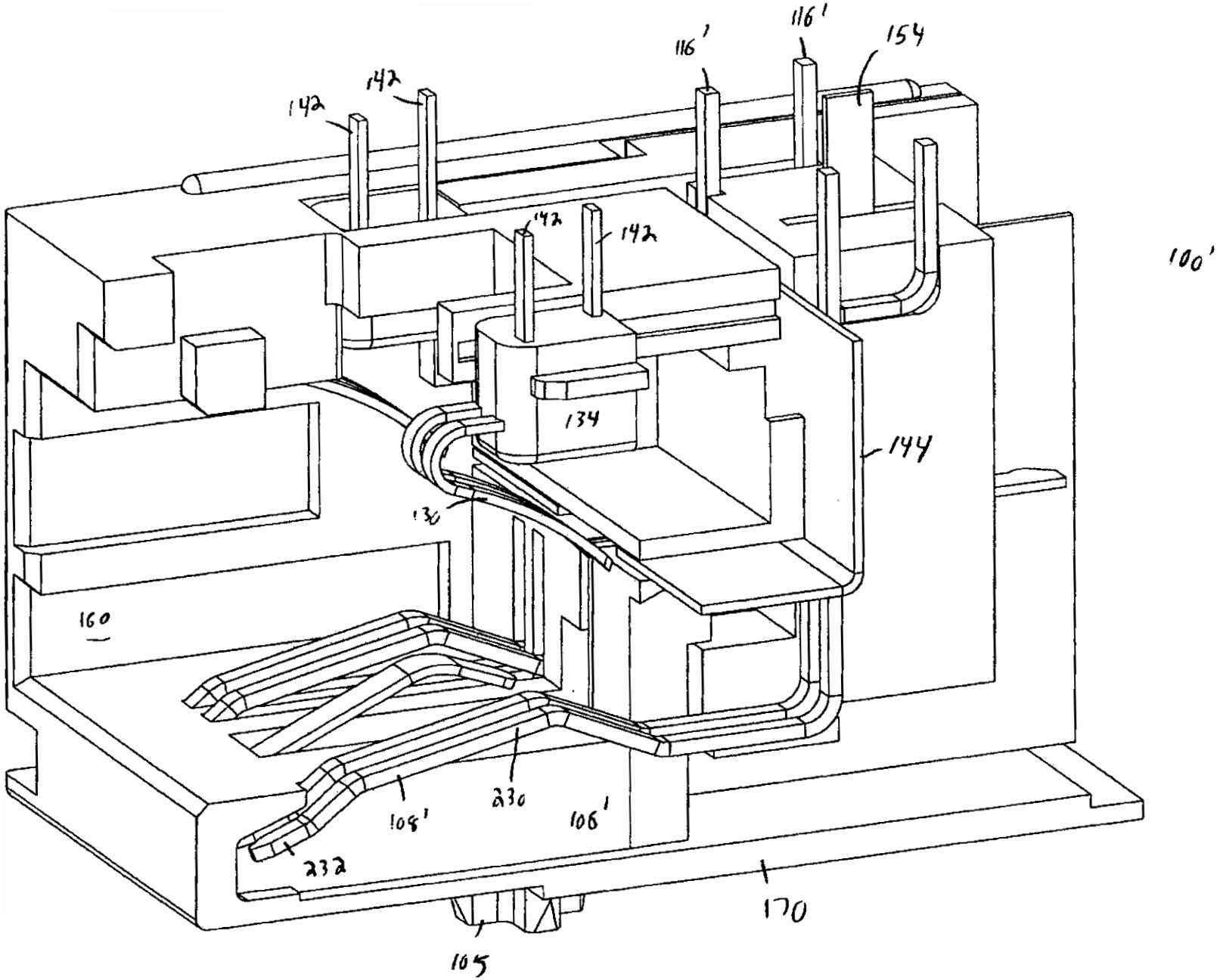
116'
116'
154
142
142
142
142
100'
134
144
130
160
230
108'
106'
232
170
105

FIG. 19

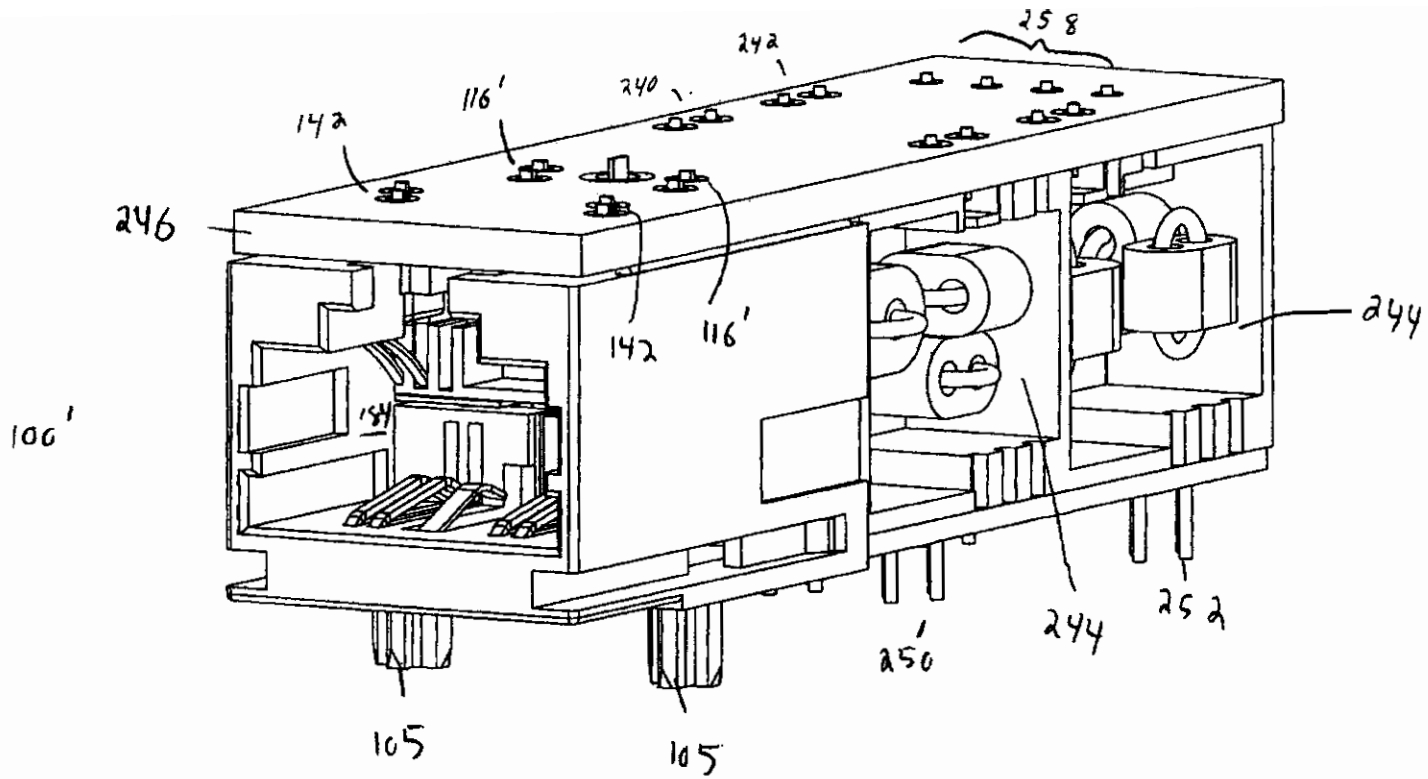

FIG. 20

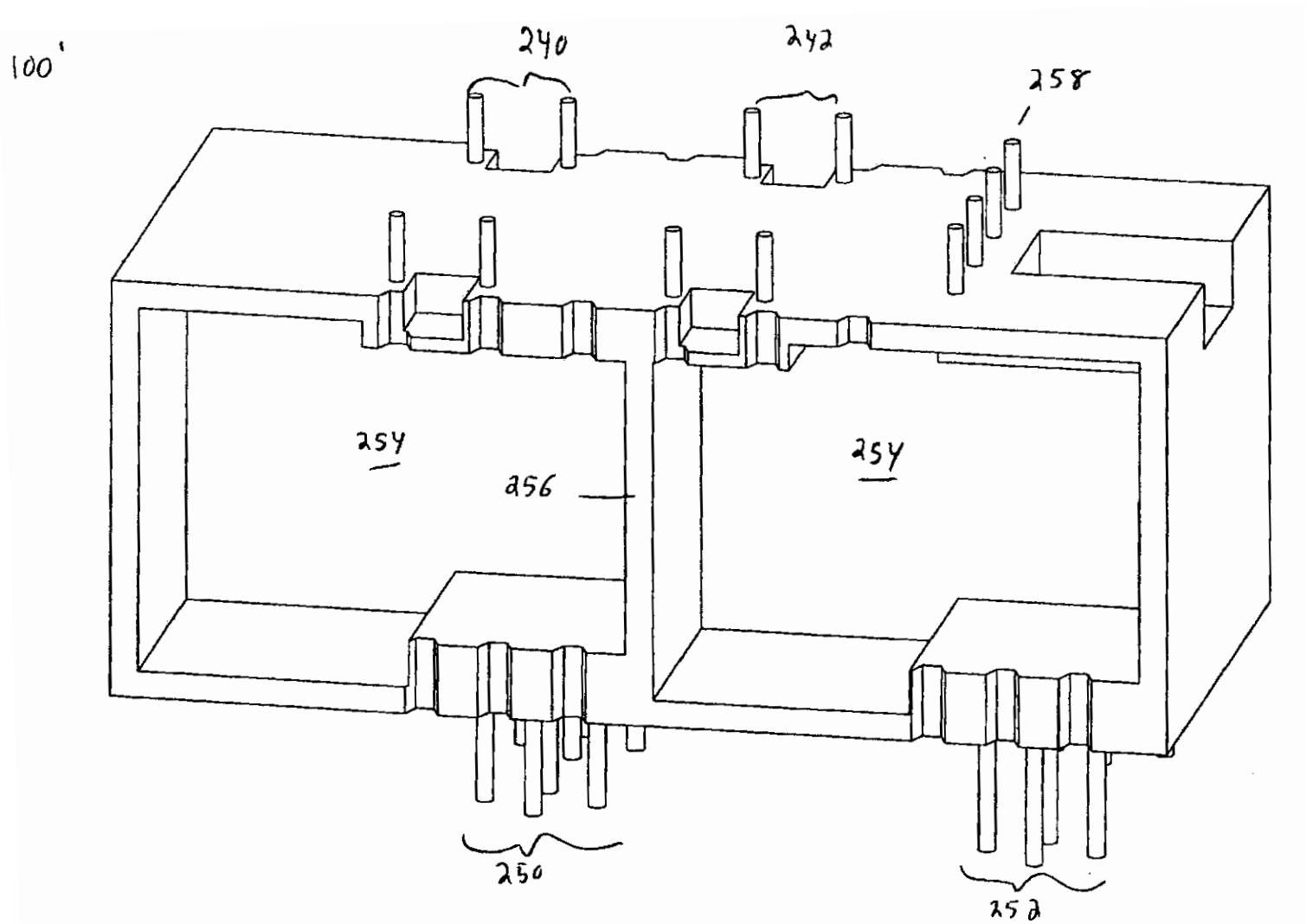

FIG. 21

ELECTRICAL CHARACTERISTICS @ 25°C

TURNS RATIO:	(P7-P6) : (J4-J5)	: 1 : 1 ±2%
	(P11-P10) : (J3-J6)	: 1 : 1 ±2%
	(P3-P2) : (J7-J8)	: 1 : 1 ±2%
	(P15-P14) : (J1-J2)	: 1 : 1 ±2%
OCL @ 100kHz,100mVRMS 8mA DC BIAS		
(P3-P2) ; (P7-P6); (P11-P10) ; (P15-P14)		: 350 uH MIN.
LEAKAGE INDUCTANCE:		
P3-P2 (WITH J7 AND J8 SHORT)		: 20nH MAX. @ 1MHz
P7-P6 (WITH J4 AND J5 SHORT)		: 20nH MAX. @ 1MHz
P11-P10 (WITH J3 AND J6 SHORT)		: 20nH MAX. @ 1MHz
P15-P14 (WITH J1 AND J2 SHORT)		: 20nH MAX. @ 1MHz
INTERWINDING CAPACITANCE:		
(P3-P2) : (J7-J8)		: 5pf MAX @ 1MHz
(P11-P10) : (J3-J6)		: 5pf MAX @ 1MHz
(P7-P6) : (J4-J5)		: 5pf MAX @ 1MHz
(P15-P14) : (J1-J2)		: 5pf MAX @ 1MHz
DC RESISTANCE:		
(J6-J3) ; (J2-J1) ; (J7-J8) : (J4-J5)		: 1.2 ohms Max.
RETURN LOSS: (RS=RL=100 ohms)		
1MHz TO 30MHz		: -19dB MIN.
30MHz TO 60MHz		: -13dB MIN.
60MHz TO 80MHz		: -12dB MIN.
80MHz TO 300MHz		: -10dB MIN.
DIELECTRIC WITHSTAND:		
(J1,J2) TO (P15,P14) ; (J4,J5) TO (P7-P6)		: 1500 VAC
(J3,J6) TO (P11,P10) ; (J7,J8) TO (P3, P2)		: 1500 VAC
INSERTION LOSS:		
100KHz TO 300MHz		: -1.1 dB TYP
300MHz TO 400MHz		: -1.5 dB TYP
CROSS TALK:		
1-100 MHz		: -35dB MIN.
COMMON TO COMMON MODE ATTENUATION:		
1MHz TO 500MHz		: TBD
DIFFEERENTIAL TO COMMON MODE ATTENUATION:		
1MHz TO 500MHz		: TBD

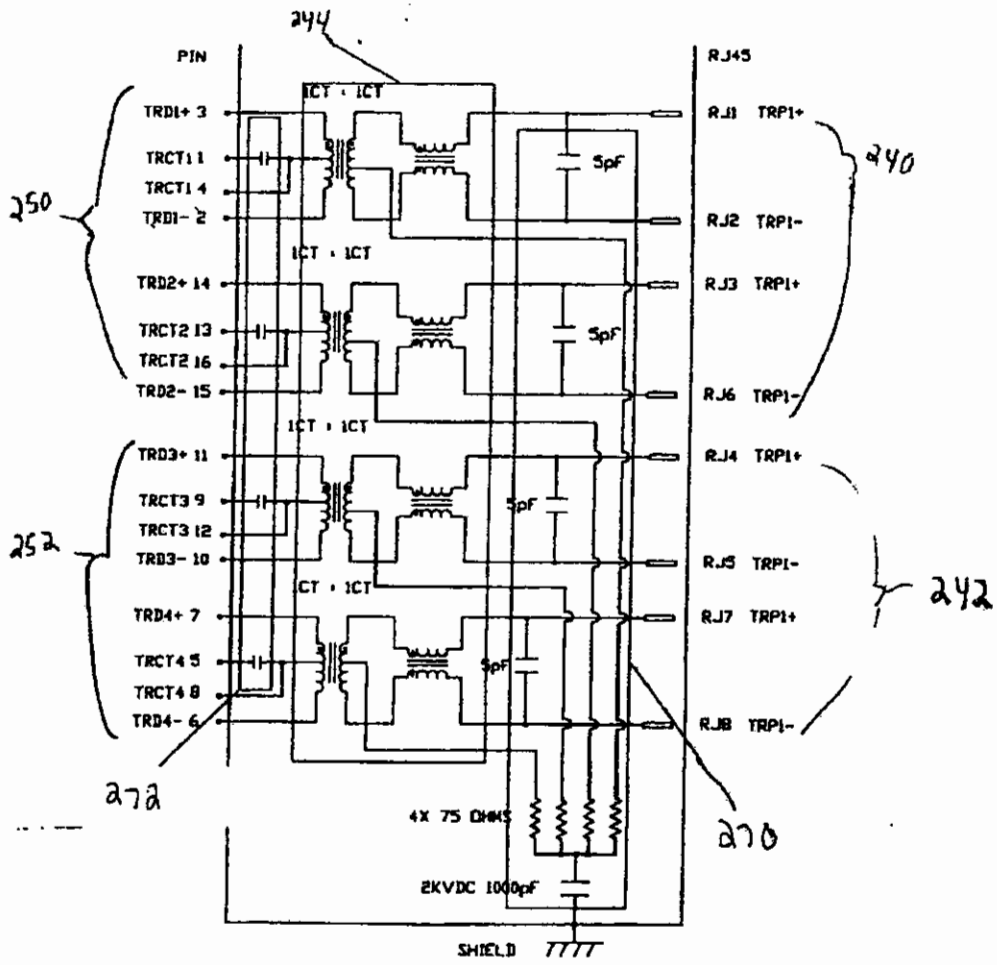

Fig 2a

FIG. 23

300
324
328
306
328
338
326
328
328
326
324
304
320
336
322
317
310
312
314
332
302
308
316
318

Fig 24

Fig 25

Fig. 26

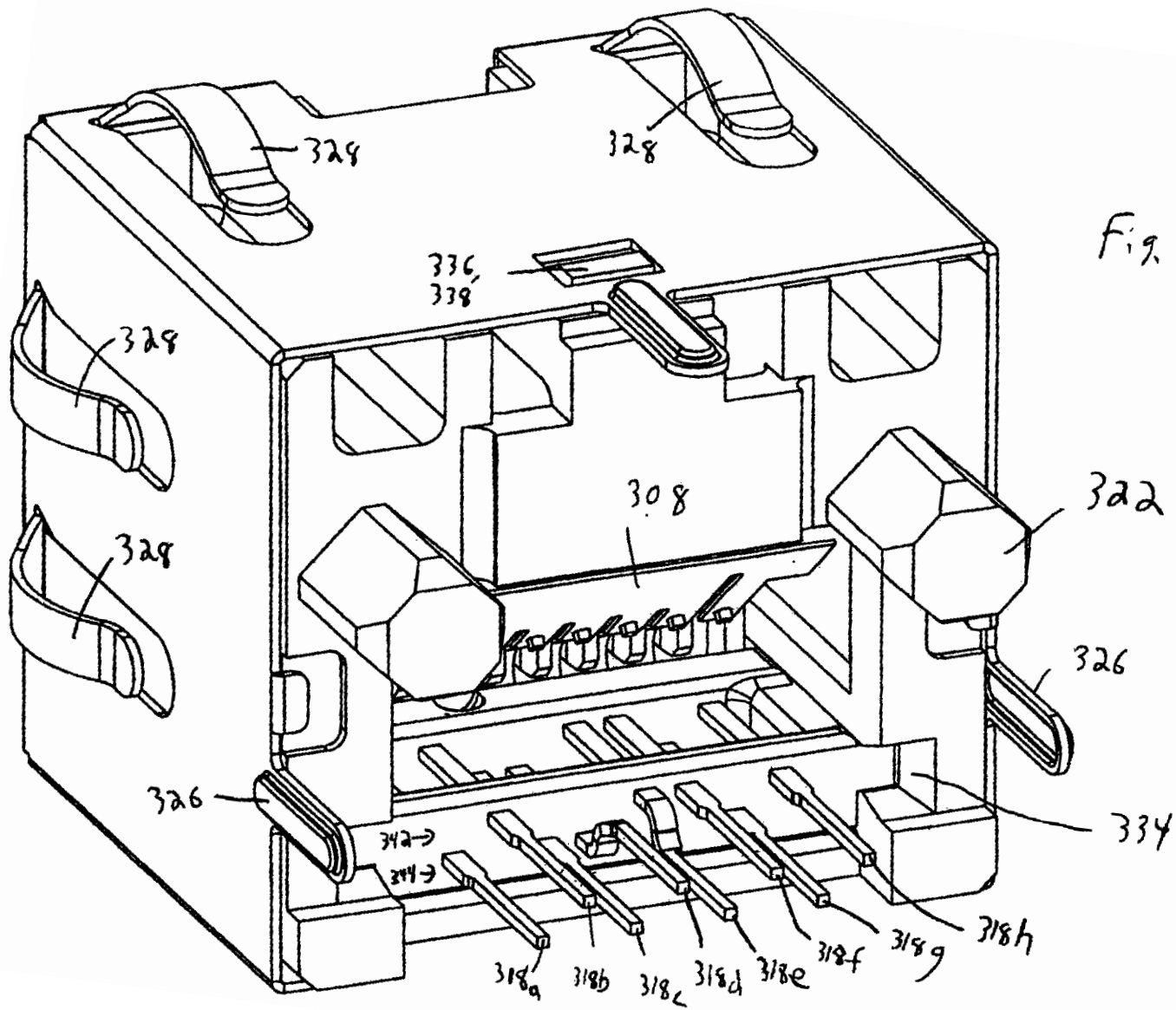
328
328
336,
338
328
328
308
322
326
326
334
342
344
318a
318b
318c
318d
318e
318f
318g
318h

Fig. 27

Fig. 28

Fig 29

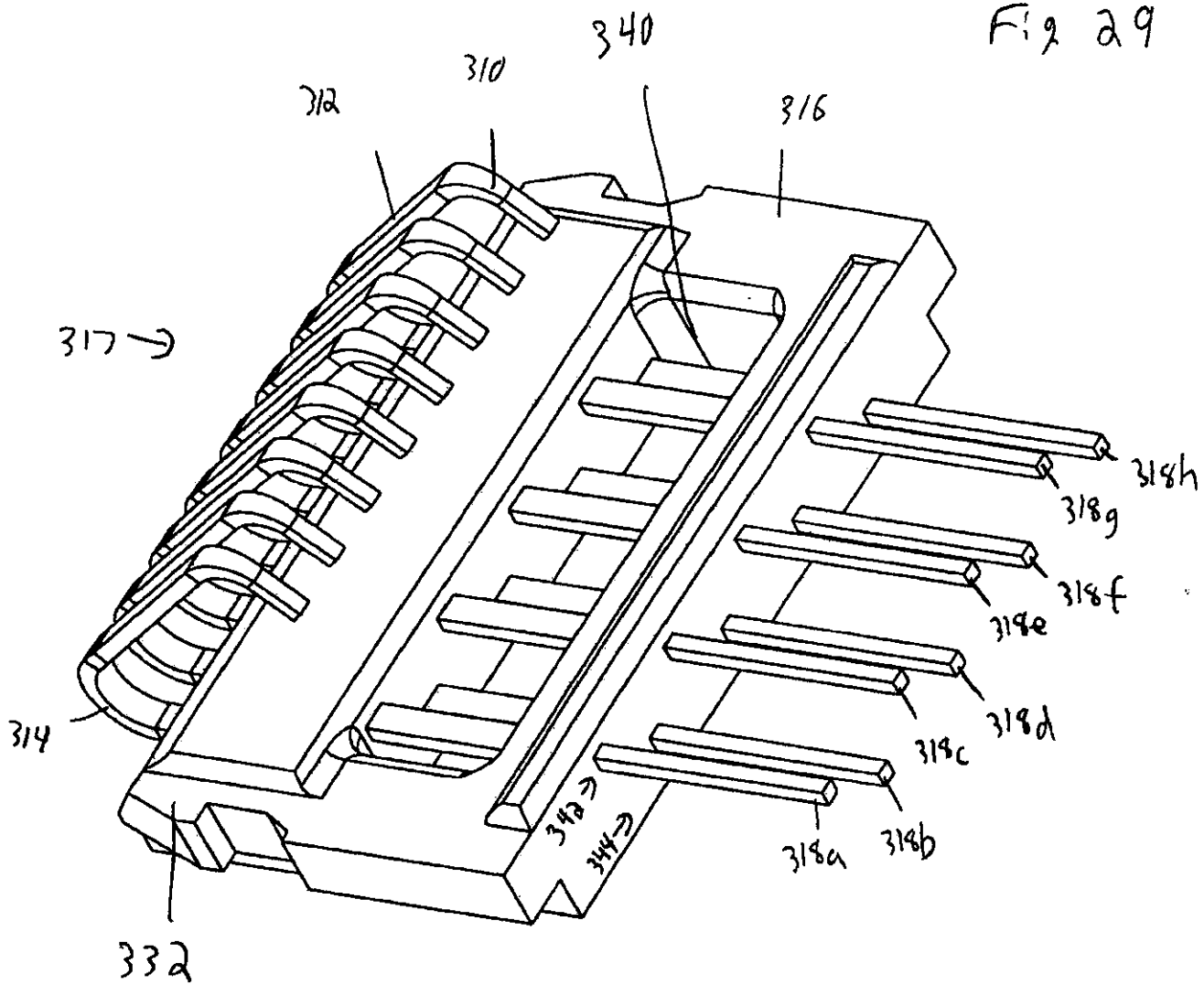
340
310
312
316
317
318h
318g
318f
318e
318d
318c
318b
318a
314
343
344
332

314
316a
316b
316c
316d
316e
316f
316g
316h
318a
318b
318c
318d
318e
318f
318g
318h
310

Fig 30

Fig 31

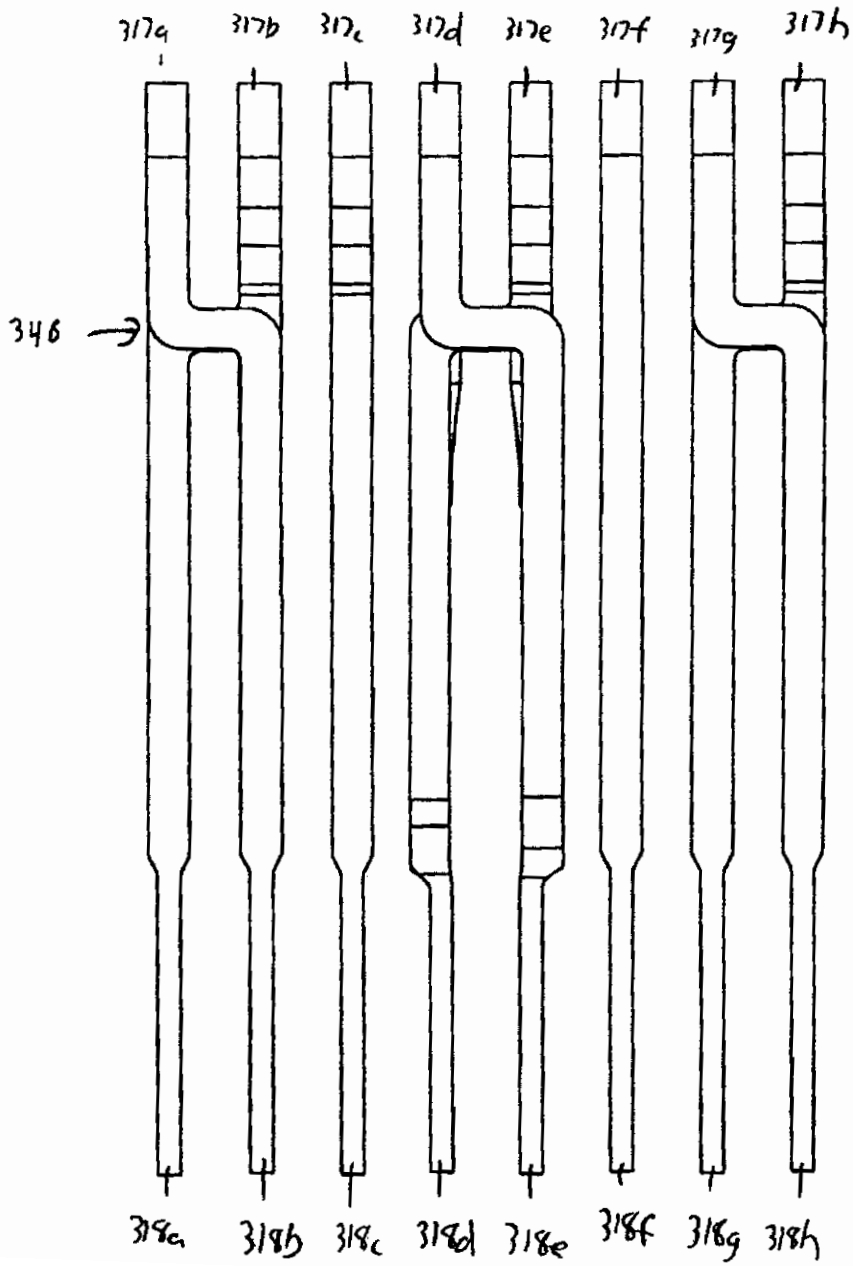
317a
317b
317c
317d
317e
317f
317g
317h
346
318a
318b
318c
318d
318e
318f
318g
318h

310
346
348
318a
318b
318c
318d
318e
318f
318g
318h
317a
317b
317c
317d
317e
317f
317g
317h

Fig 3a

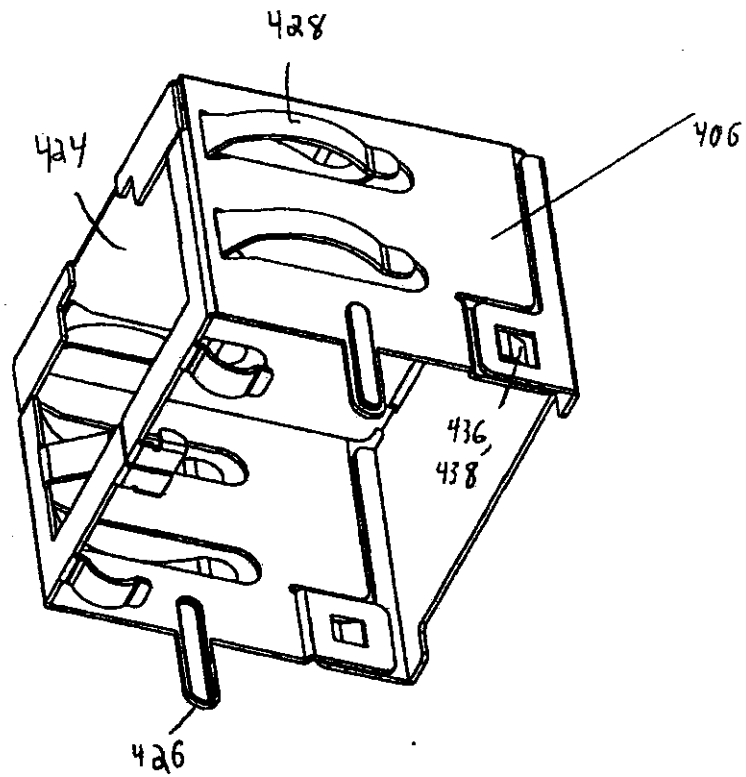
428
424
406
436,
438
426

Fig. 33

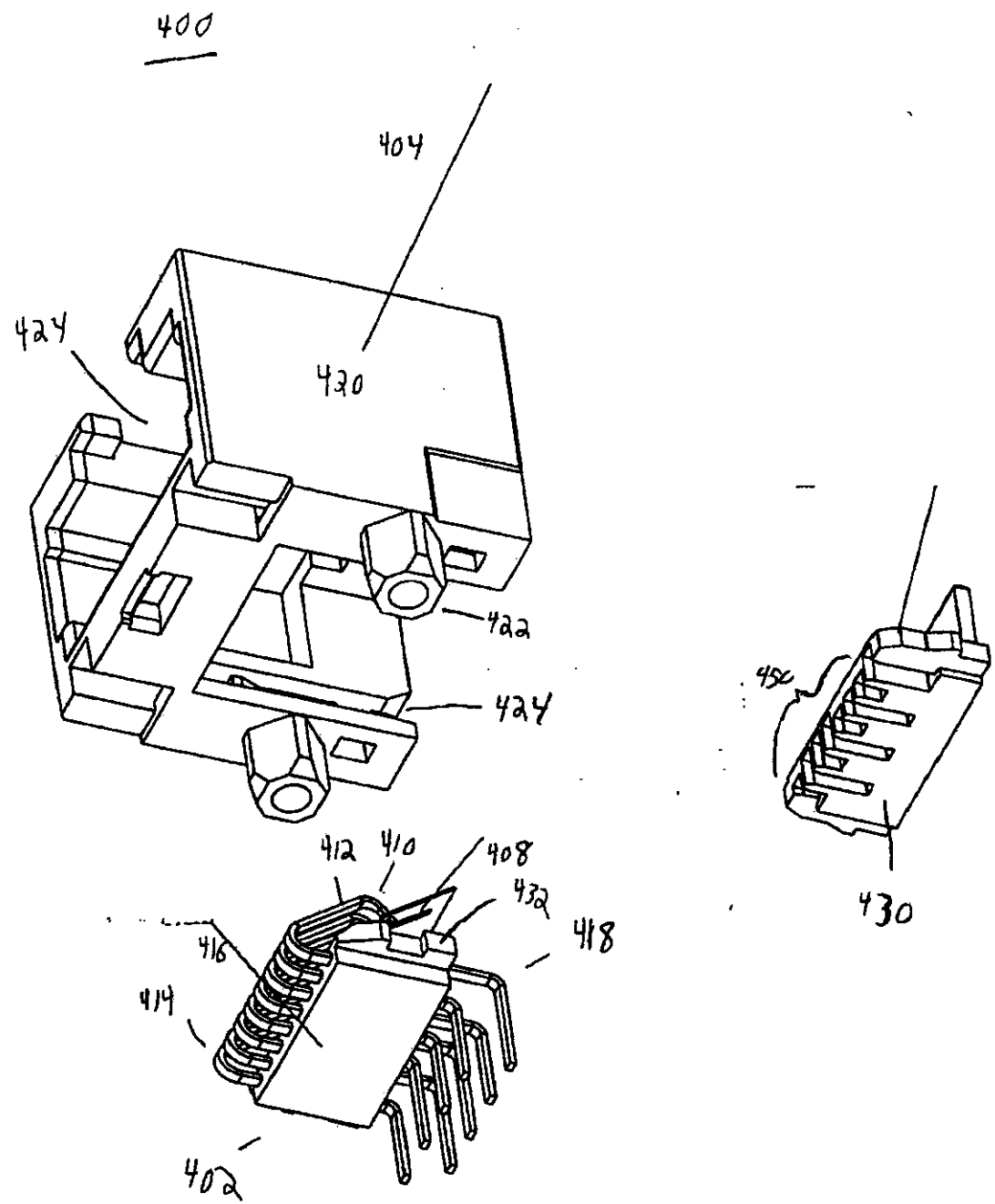
400
404
424
420
422
424
412
410
408
432
418
416
414
402
450
430

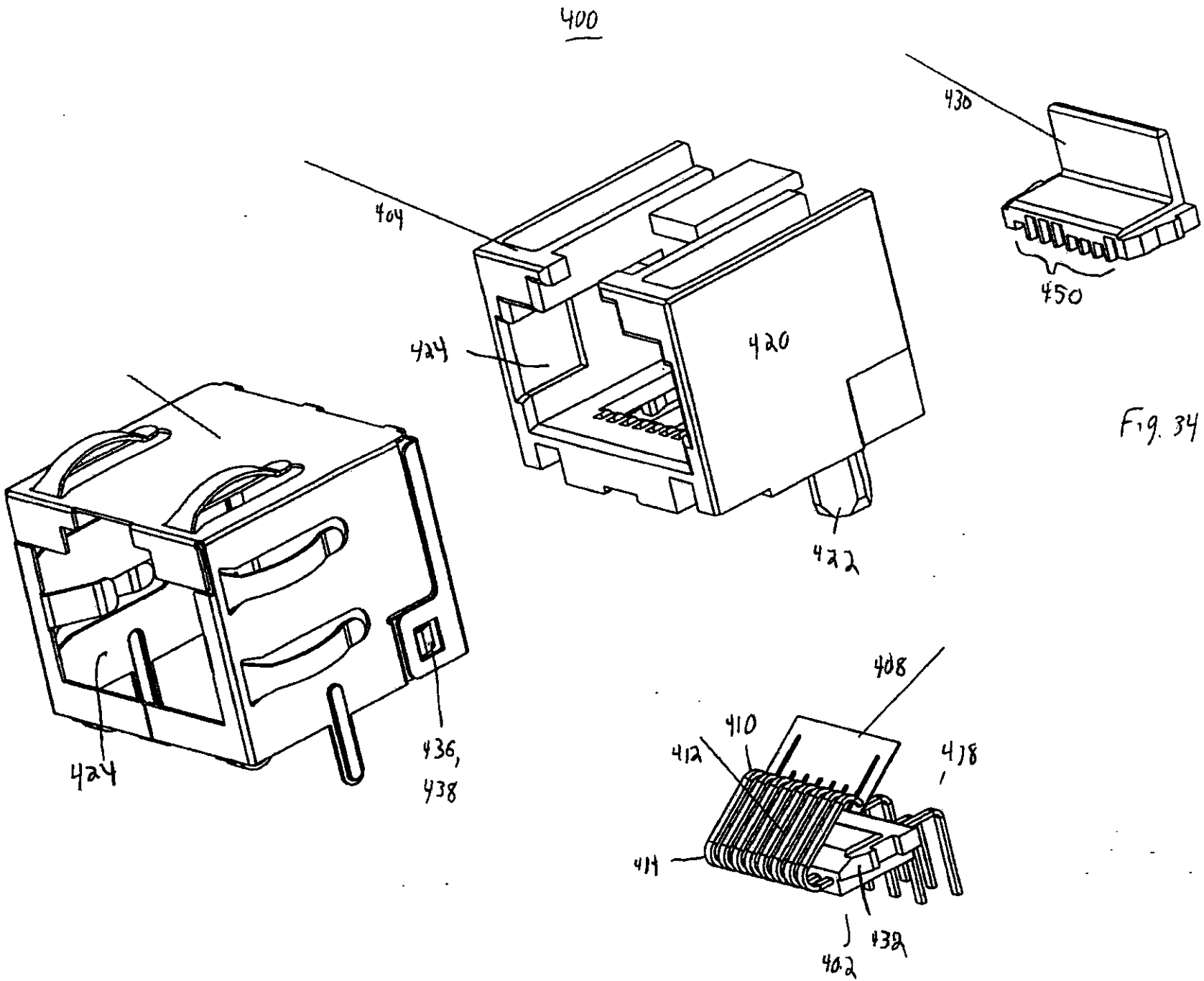
400
430
450
404
424
420
422
424
436,
438
408
410
412
418
414
432
402

Fig. 34

Fig. 35

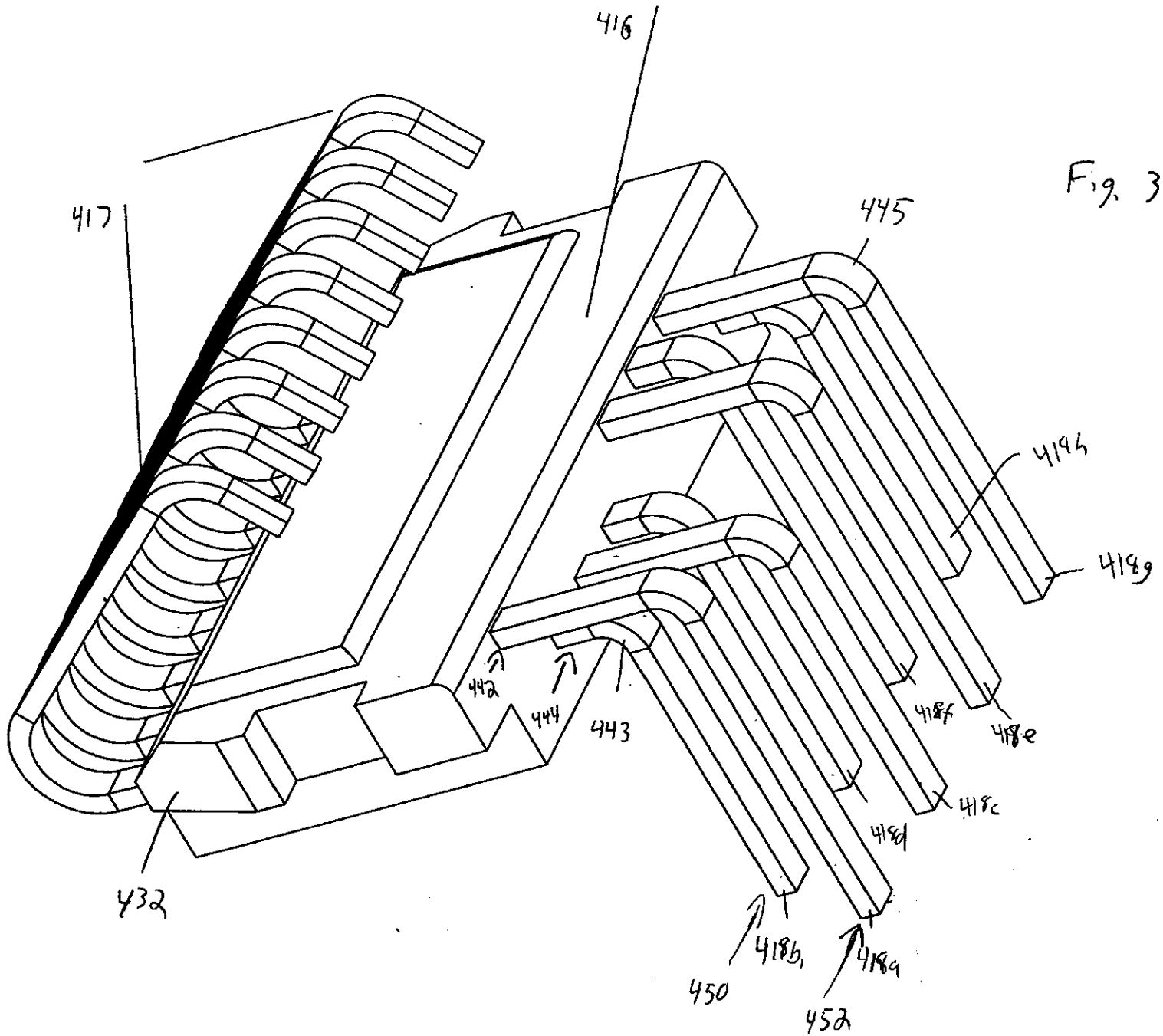
416
417
445
418h
418g
442
444
443
418f
418e
418c
418d
432
418b
418a
450
452

Fig. 36

Fig. 37

Fig. 3B

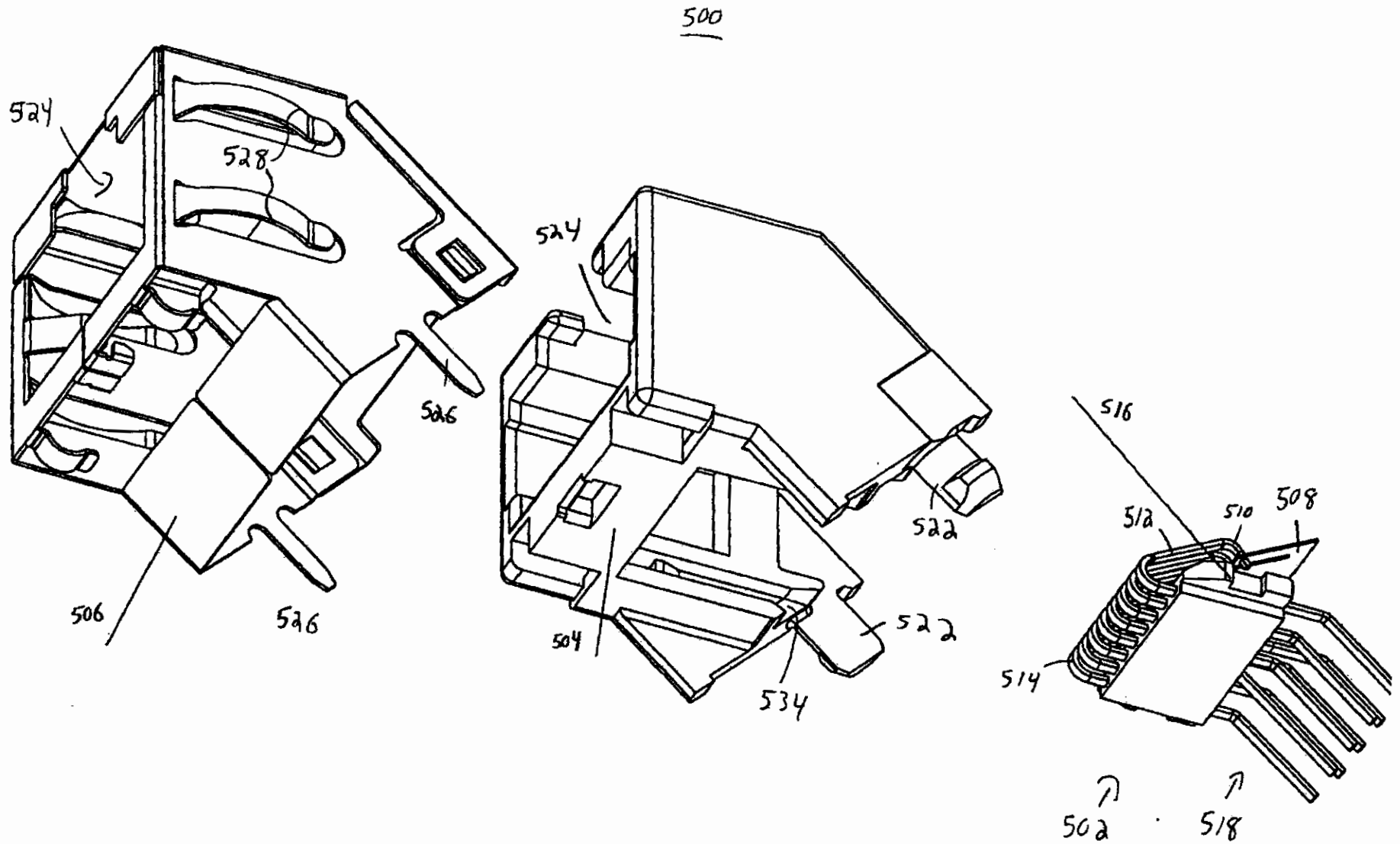
500
524
528
526
506
526
524
522
504
534
522
516
512
510
508
514
502
518

Fig 39

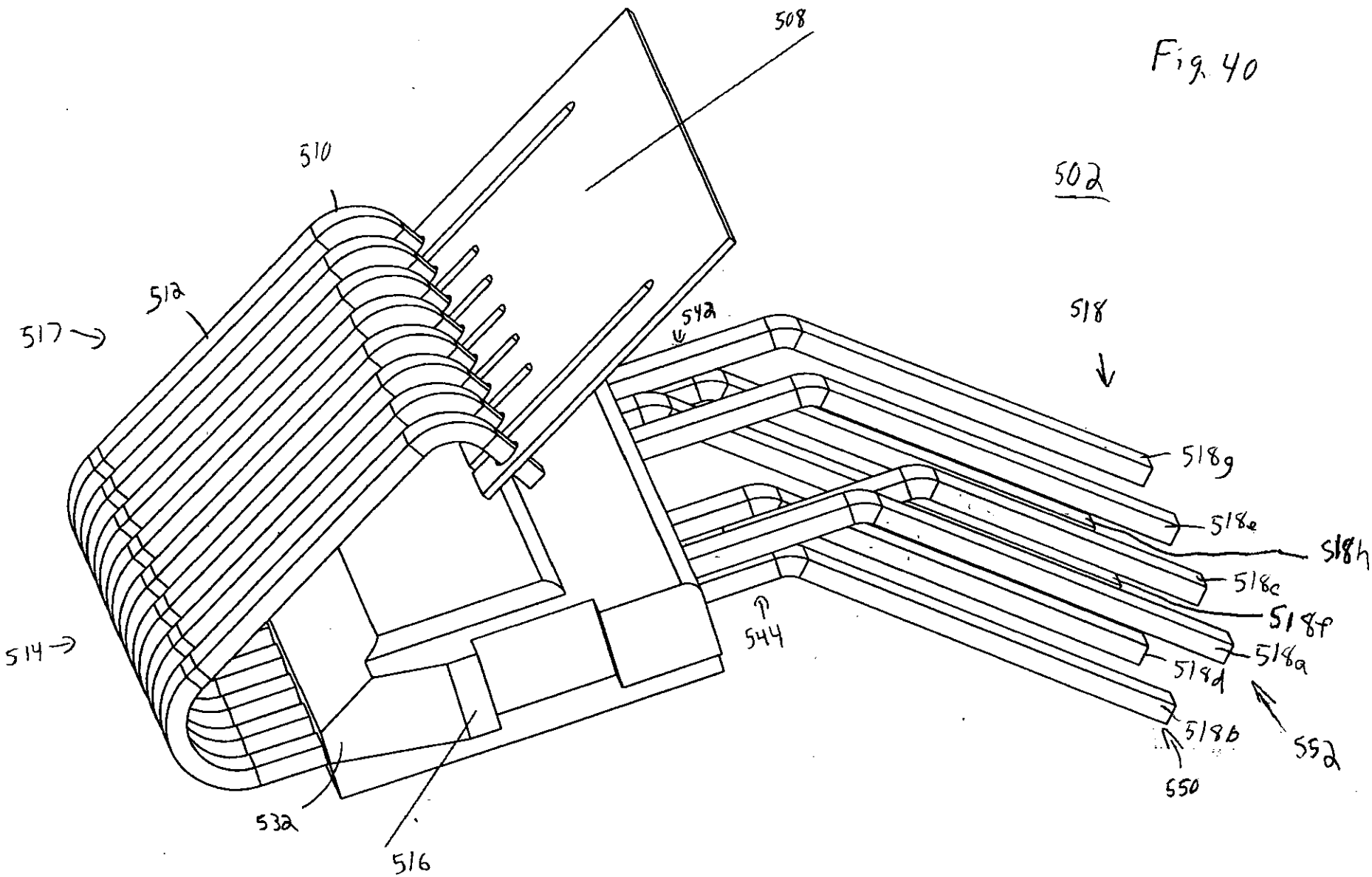
508
510
502
512
517
542
518
518g
518e
518h
518c
518f
518a
518d
518b
552
550
544
514
532
516

Fig. 40

Fig. 41

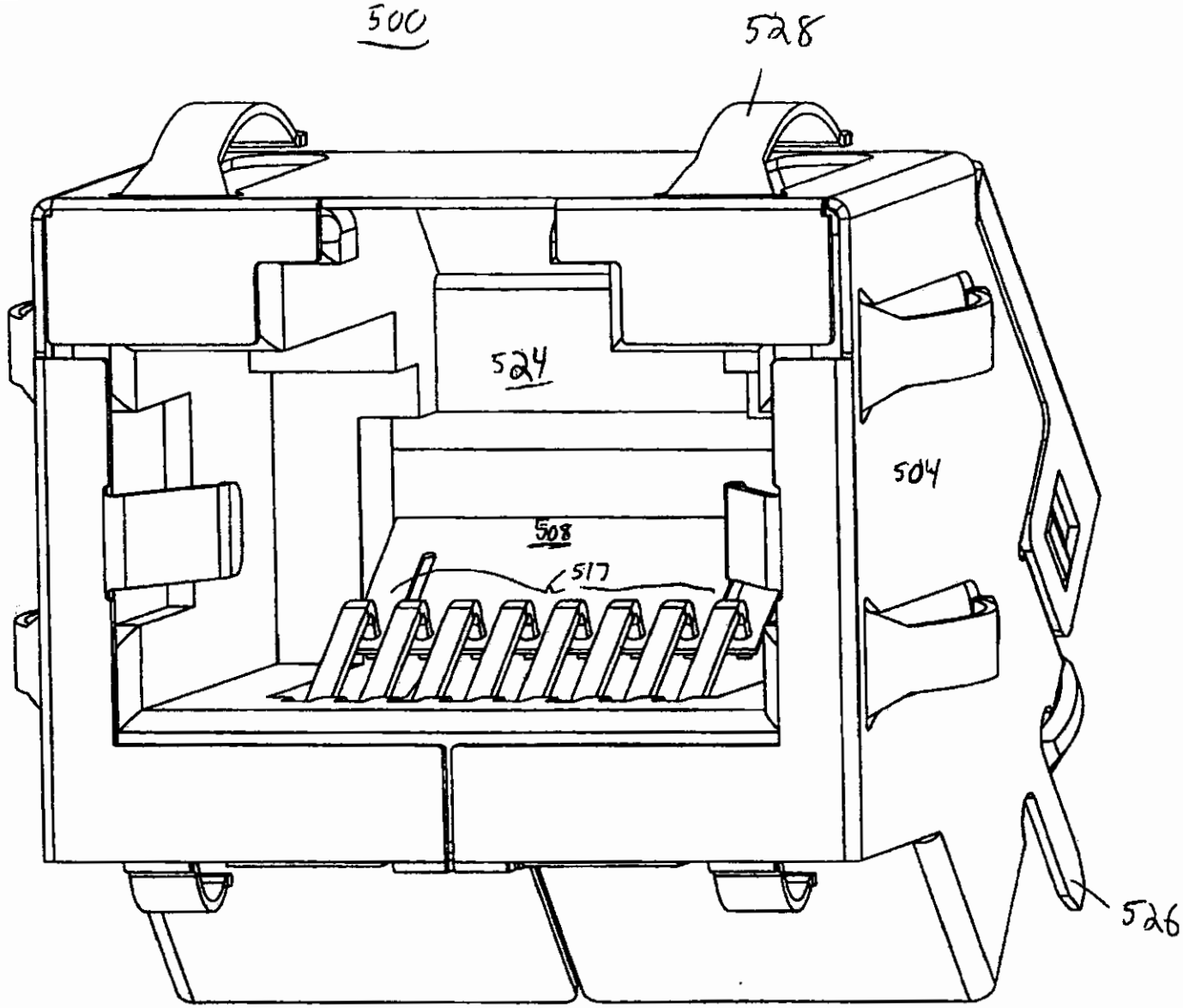

Fig 42