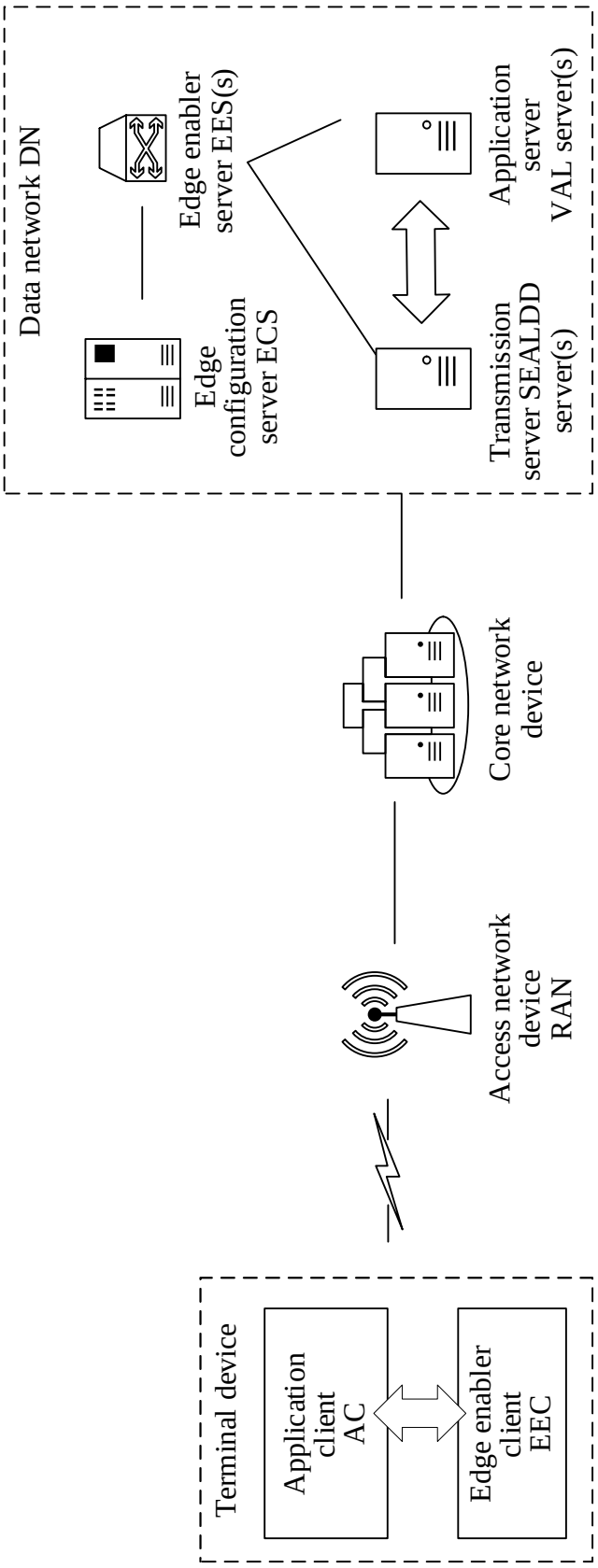
Data network DN
Edge enabler server EES(s)
Application server VAL server(s)
Edge configuration server ECS
Transmission server SEALDD server(s)
Core network device
Access network device RAN
Terminal device
Application client AC
Edge enabler client EEC

FIG. 1