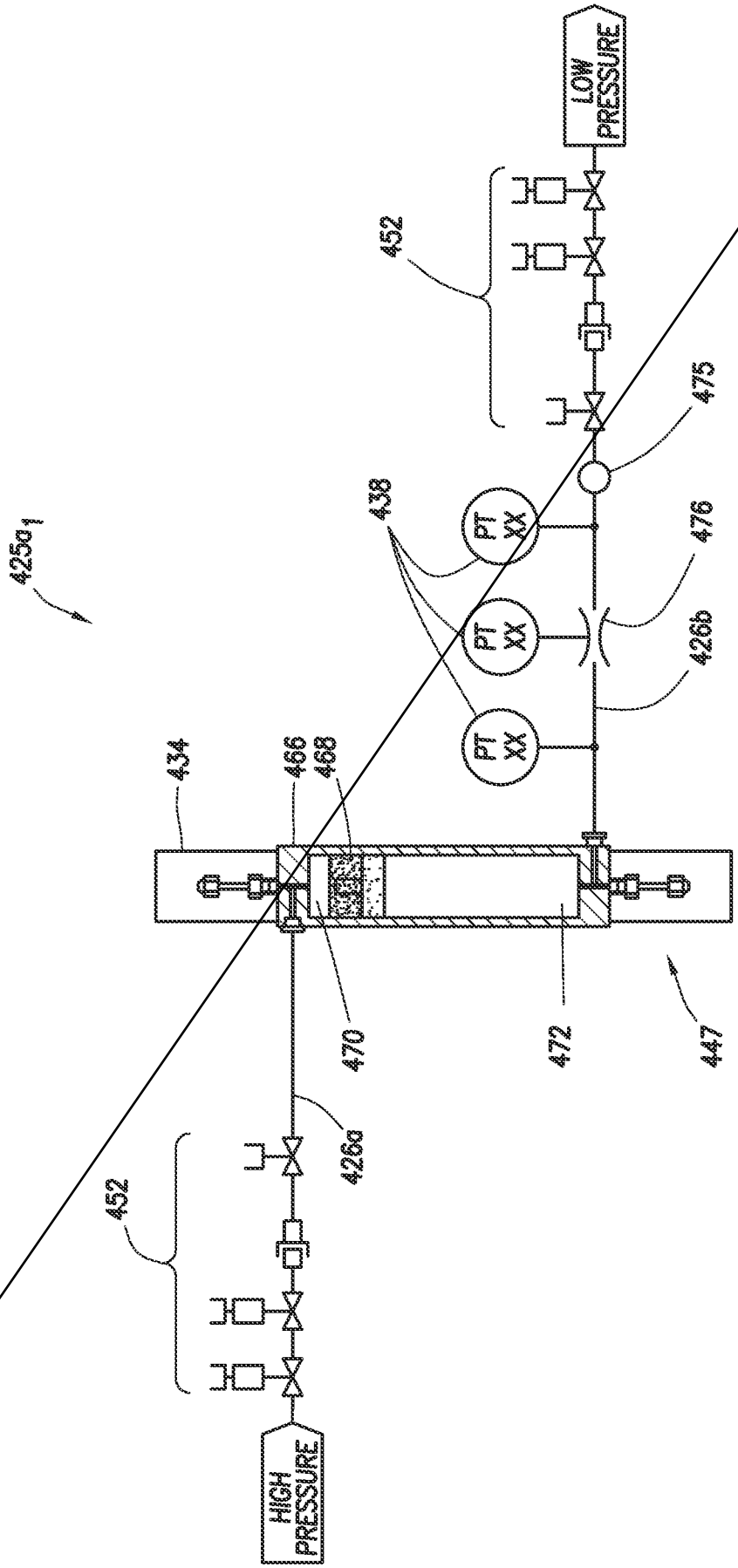
LOW PRESSURE
452
475
438
PT XX
PT XX
PT XX
476
426b
425a1
434
466
468
470
472
447
426a
452
HIGH PRESSURE

FIG.4A

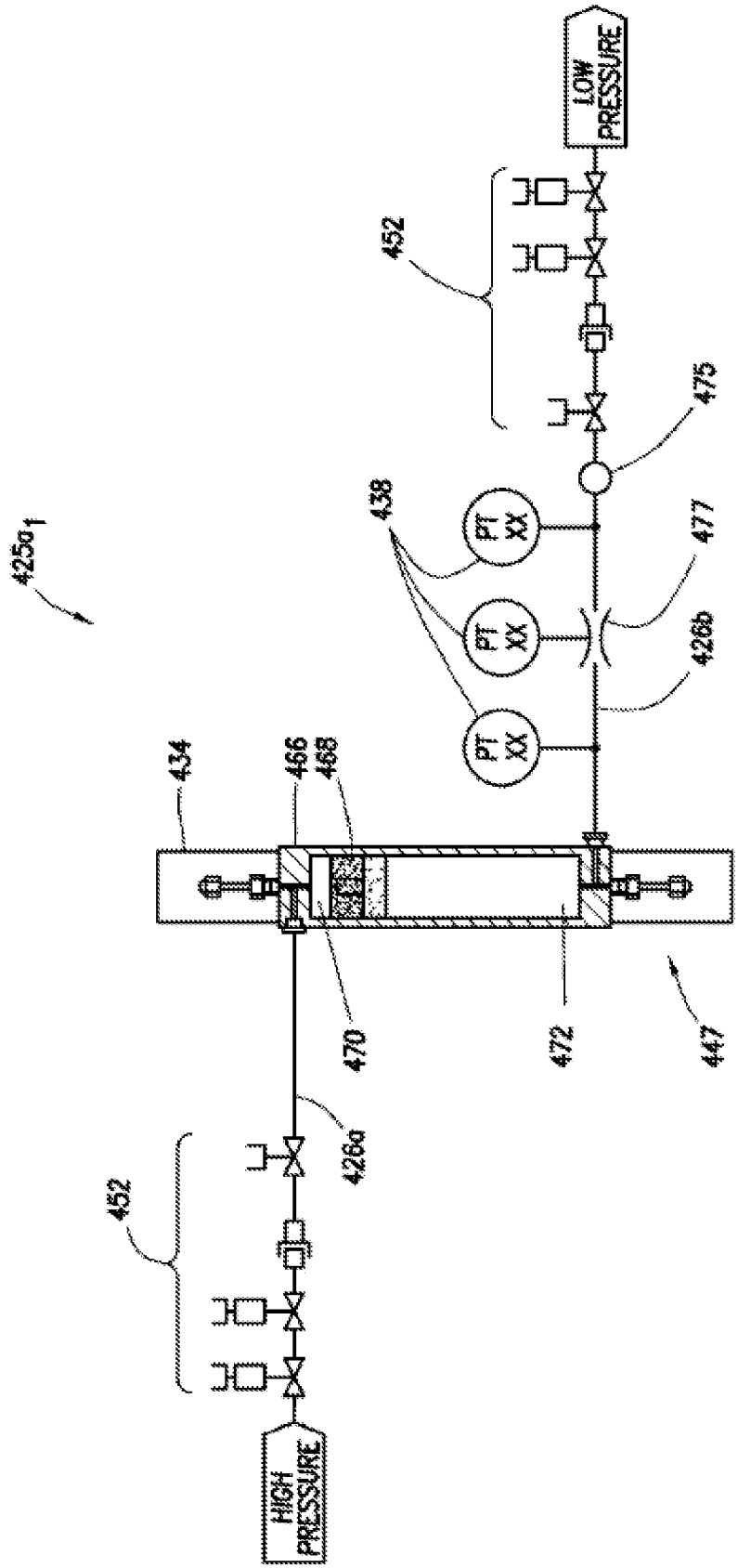
LOW PRESSURE
452
475
438
PT XX
PT XX
PT XX
477
426b
425a1
434
466
468
470
472
447
426a
452
HIGH PRESSURE

FIG. 4A