PCT WORLD INTELLECTUAL PROPERTY ORGANIZATION
International Bureau

INTERNATIONAL APPLICATION PUBLISHED UNDER THE PATENT COOPERATION TREATY (PCT)

(51) International Patent Classification 6 : B25G 3/38	A1	(11) International Publication Number: WO 99/16588
		(43) International Publication Date: 8 April 1999 (08.04.99)

(21) International Application Number: PCT/US98/17465

(22) International Filing Date: 20 August 1998 (20.08.98)

(30) Priority Data:
08/942,148 1 October 1997 (01.10.97) US

(71) Applicant: SOUTHCO, INC. [US/US]; 210 North Brinton Lake Road, Concordville, PA 19331 (US).

(72) Inventors: KUREK, Edward, A.; 218 Crystal Circle, Birdsboro, Berks County, PA 19508 (US). MORRISON, Marty; 253 Cedar Ridge Road, West Chester, Chester County, PA 19380 (US).

(74) Agents: GREENE, Gary, A. et al.; Paul & Paul, 2900 Two Thousand Market Street, Philadelphia, PA 19103 (US).

(81) Designated States: AT, AU, BR, CA, CH, CN, CZ, DE, DK, ES, FI, GB, HU, ID, IL, JP, KR, LU, MX, NO, NZ, PL, PT, RU, SE, SG, SI, TR, UA, European patent (AT, BE, CH, CY, DE, DK, ES, FI, FR, GB, GR, IE, IT, LU, MC, NL, PT, SE).

Published
With international search report.

(54) Title: FOLDING HANDLE DEVICE

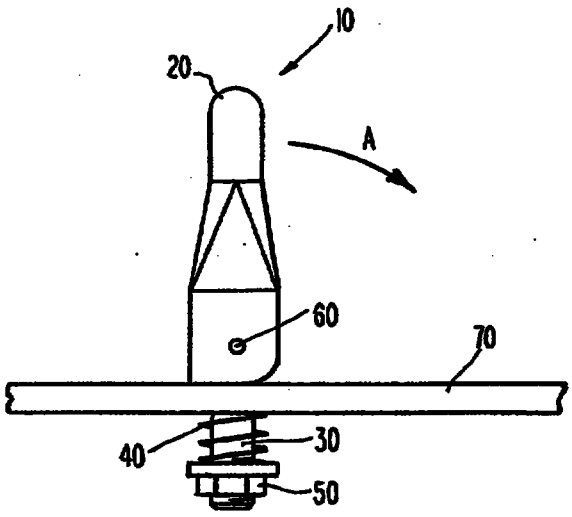

(57) Abstract

A folding handle device (10) is disclosed, mountable to an article to be carried, having a rotatable U-shaped handle (20) with leg members adaptable to pivotally receive a mounting shaft (30), each leg member having a base having planar surfaces (23, 25) such that the handle can be held upright or folded. The device further includes two mounting shafts rotatably mounted to the handle through apertures in a planar mounting surface (70) and are retained in place by a nut (50). A spring (40) between the nut and the bottom side of the mounting surface bias the mounting shaft away from the planar mounting surface. The handle is adapted to facilitate axial movement of the shafts relative to and perpendicular to the planar mounting surface as the handle is rotated between the upright and folded positions, wherein when the handle is either in the upright or folded position, the spring is under a compressive load, and during the transition from folded to upright positions, the spring is under a greater compressive load than that when the handle is in the upright or folded position.