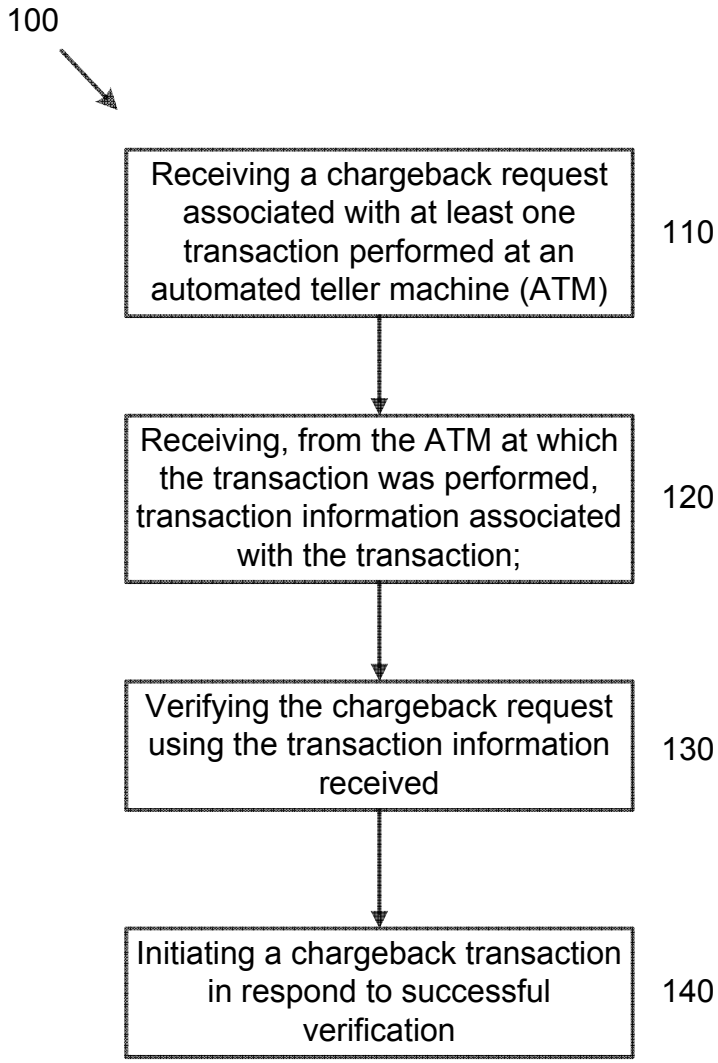
100
Receiving a chargeback request associated with at least one transaction performed at an automated teller machine (ATM)
110
Receiving, from the ATM at which the transaction was performed, transaction information associated with the transaction;
120
Verifying the chargeback request using the transaction information received
130
Initiating a chargeback transaction in respond to successful verification
140

Fig. 1

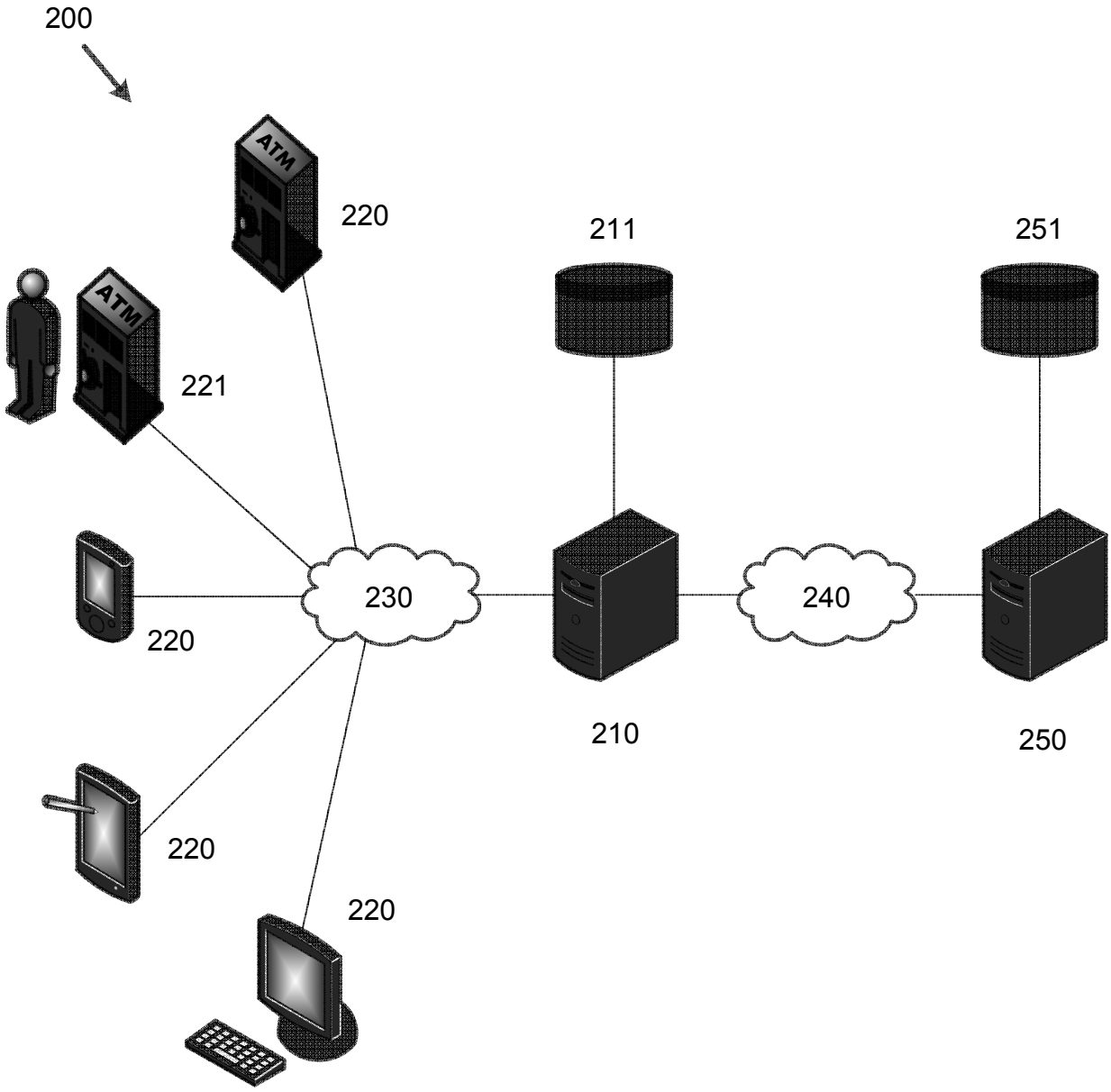

Fig. 2

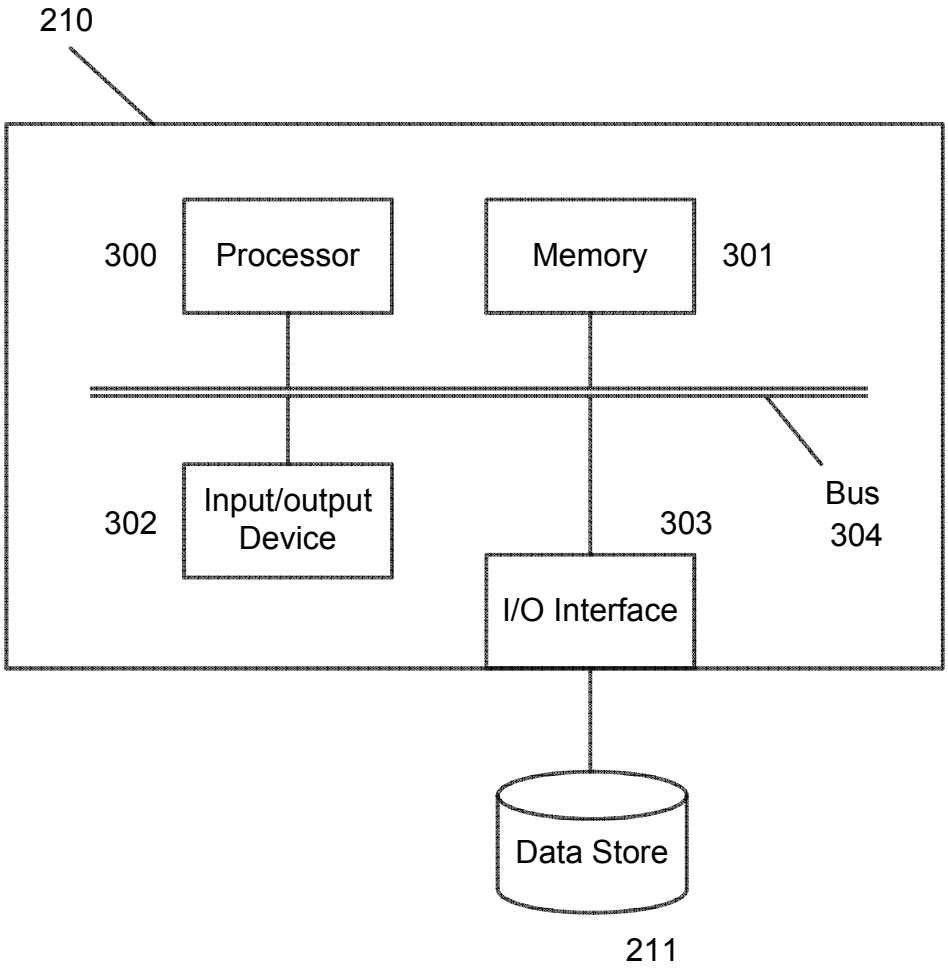
210
300
Processor
Memory
301
Bus
304
302
Input/output
Device
303
I/O Interface
Data Store
211

Fig. 3

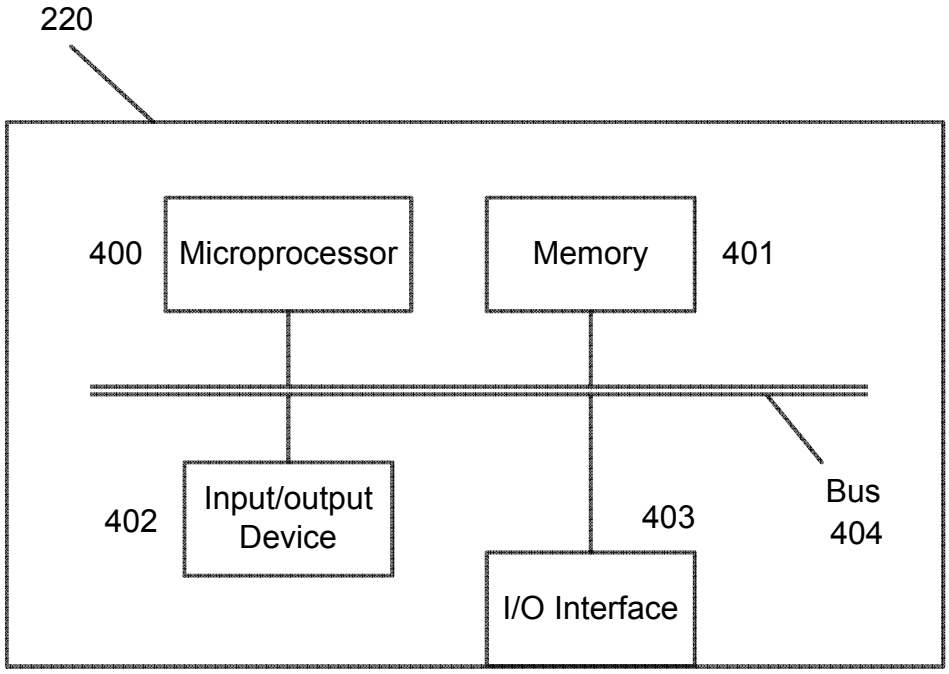
220
400
Microprocessor
Memory
401
402
Input/output
Device
403
Bus
404
I/O Interface

Fig. 4

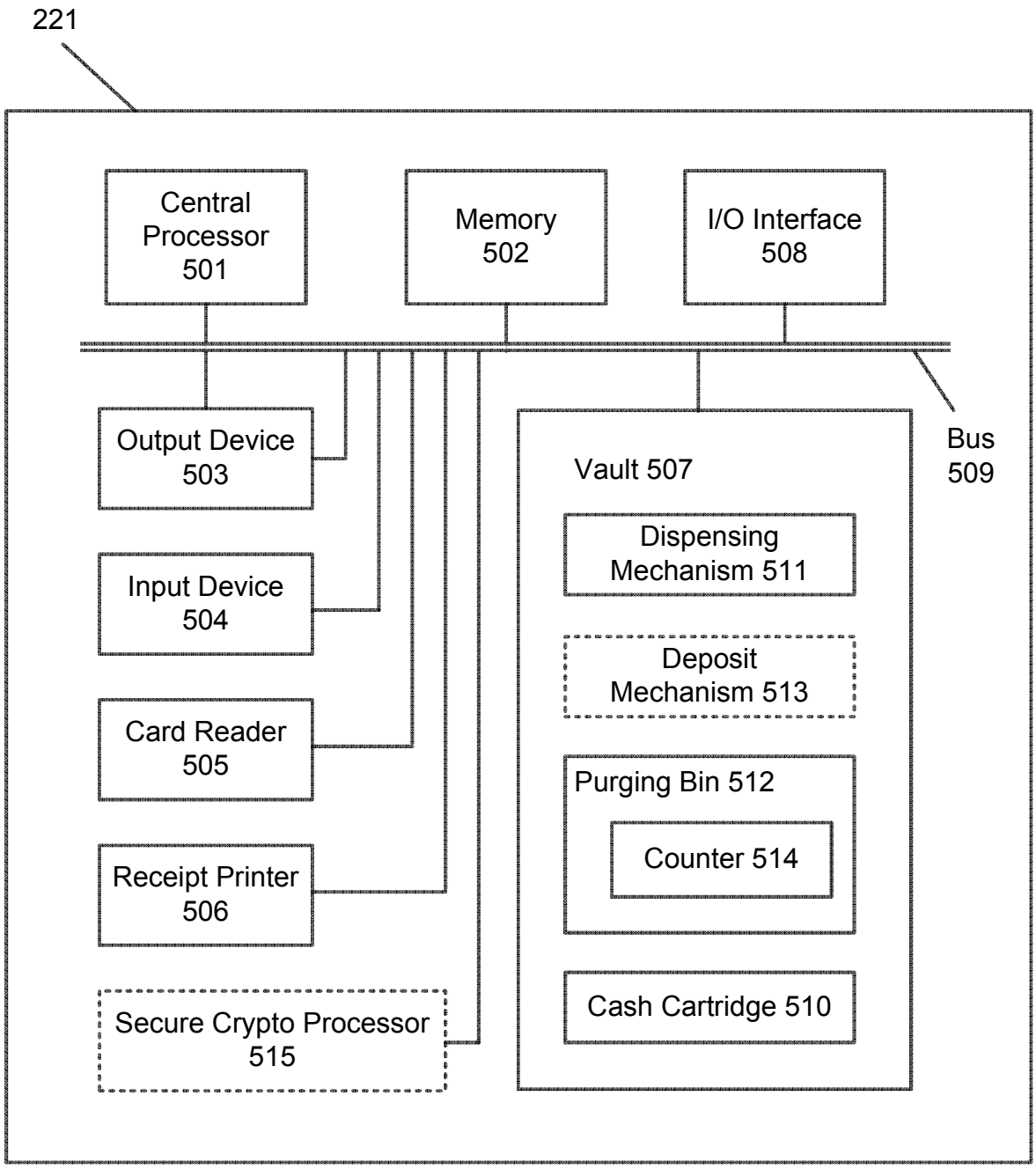
221
Central Processor 501
Memory 502
I/O Interface 508
Bus 509
Output Device 503
Input Device 504
Card Reader 505
Receipt Printer 506
Secure Crypto Processor 515
Vault 507
Dispensing Mechanism 511
Deposit Mechanism 513
Purging Bin 512
Counter 514
Cash Cartridge 510

Fig. 5

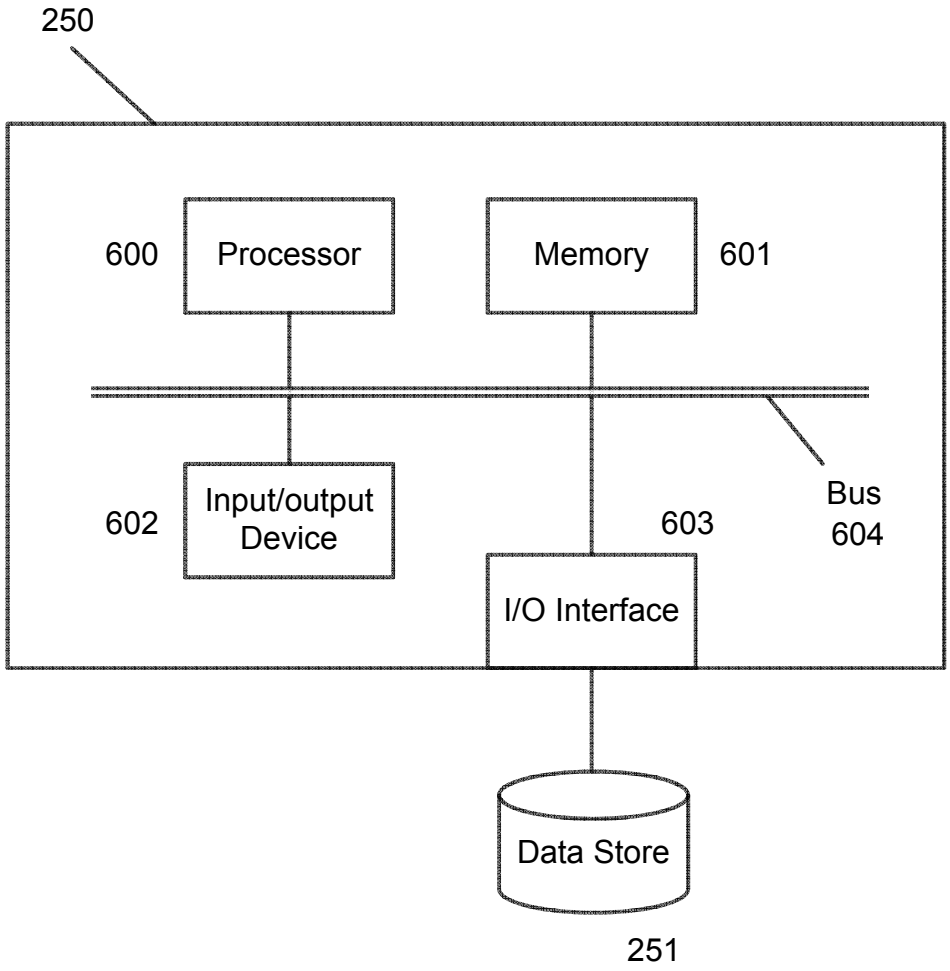
250
600
Processor
Memory
601
602
Input/output
Device
603
Bus
604
I/O Interface
Data Store
251

Fig. 6

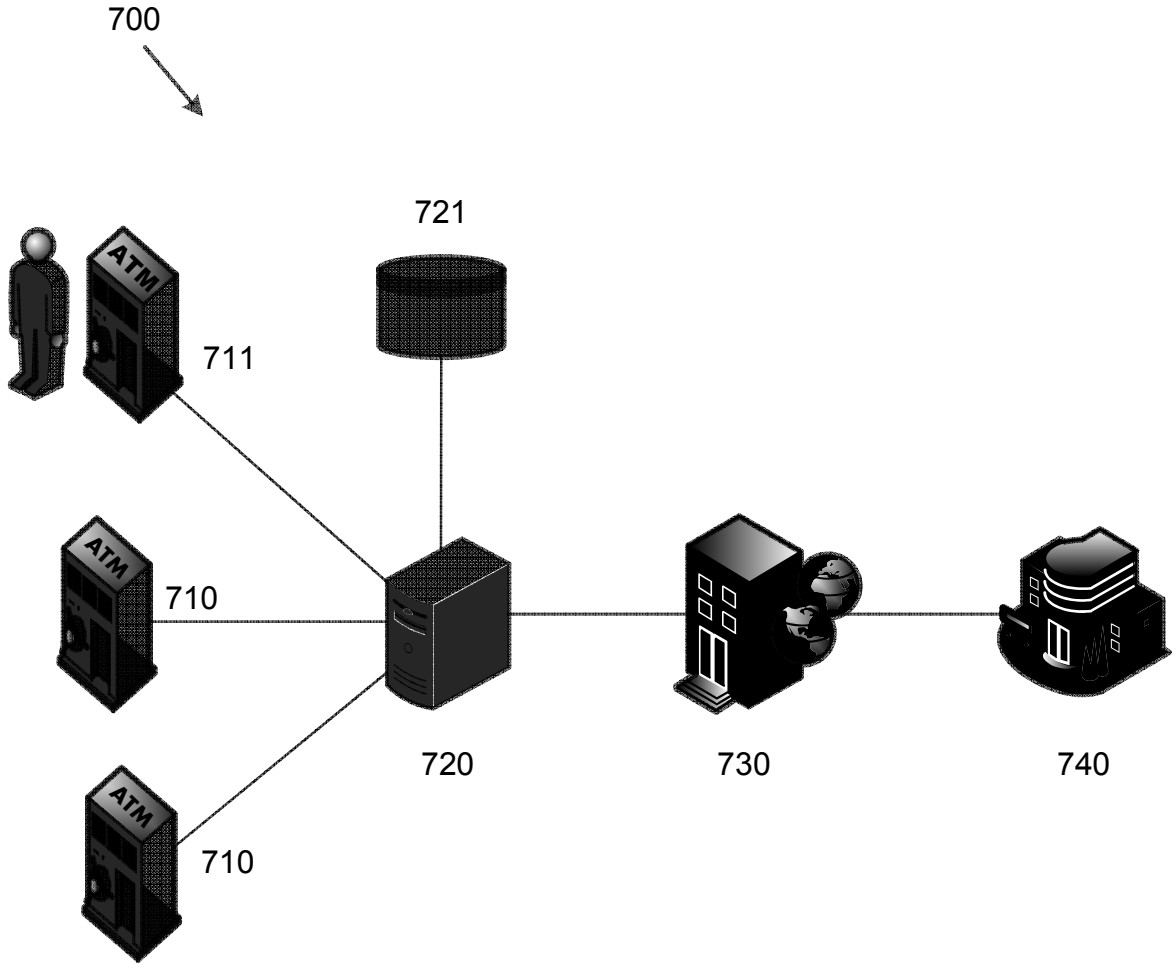

Fig. 7

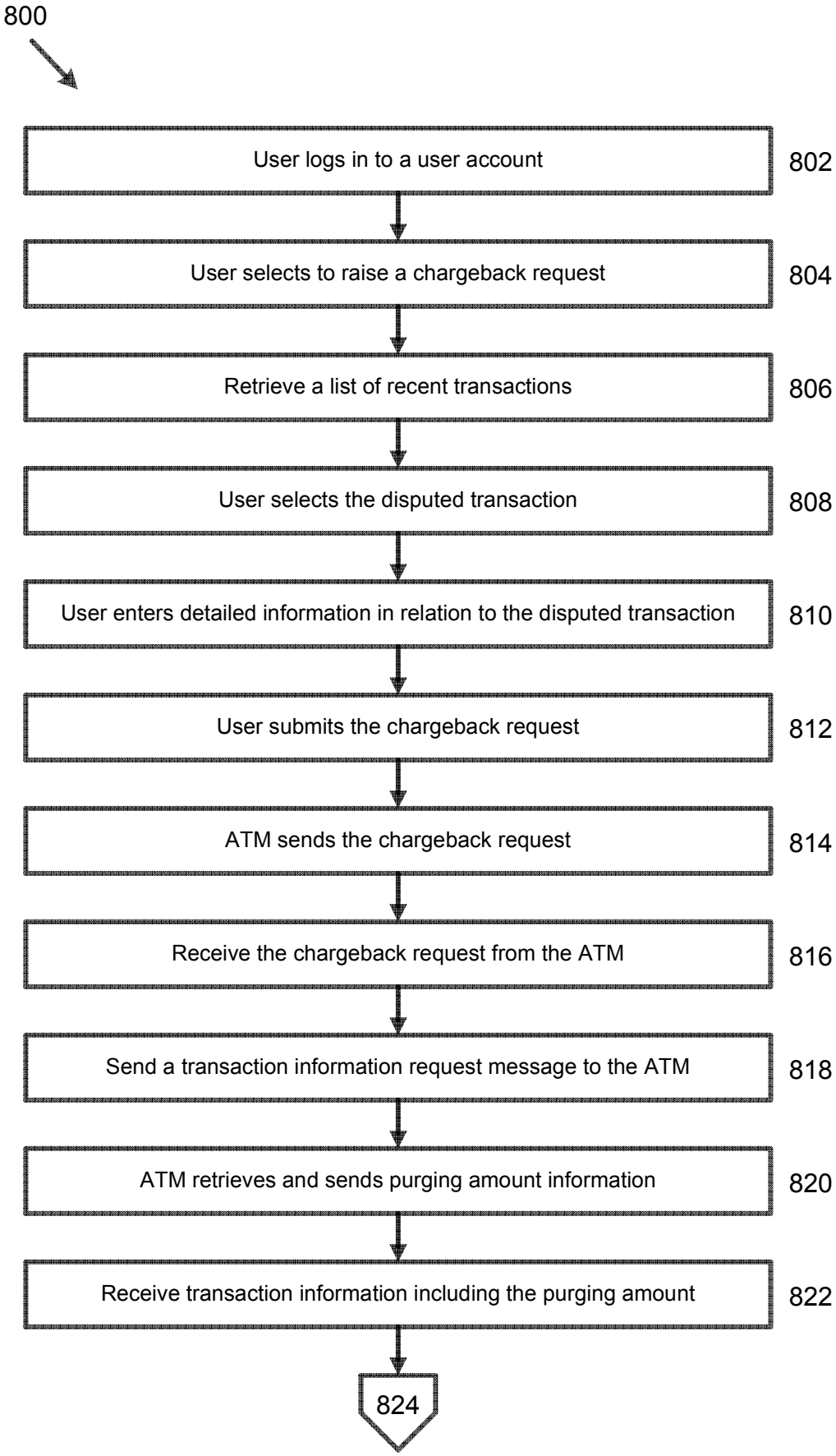
800
User logs in to a user account
802
User selects to raise a chargeback request
804
Retrieve a list of recent transactions
806
User selects the disputed transaction
808
User enters detailed information in relation to the disputed transaction
810
User submits the chargeback request
812
ATM sends the chargeback request
814
Receive the chargeback request from the ATM
816
Send a transaction information request message to the ATM
818
ATM retrieves and sends purging amount information
820
Receive transaction information including the purging amount
822
824

Fig. 8A

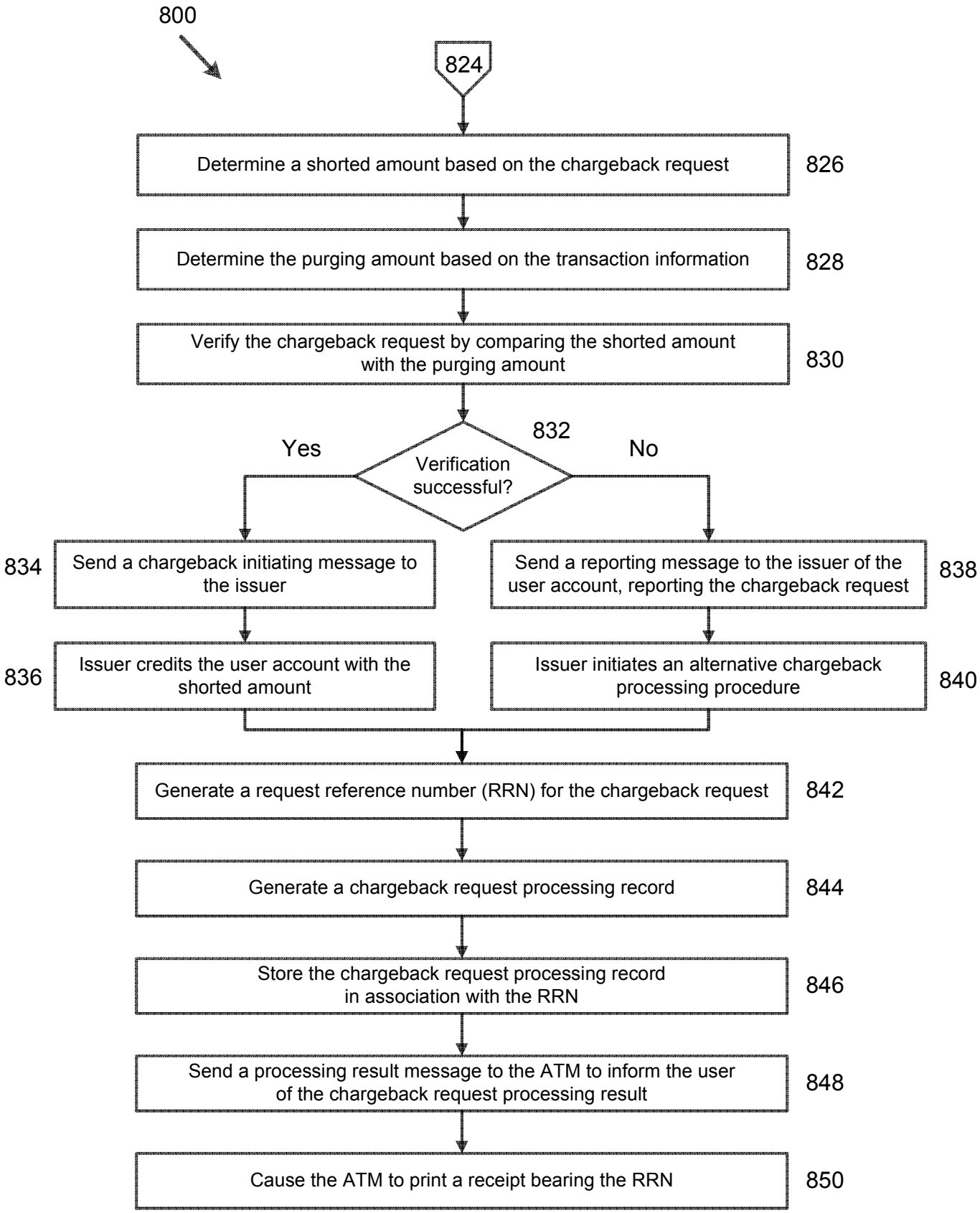
800
824
Determine a shorted amount based on the chargeback request
826
Determine the purging amount based on the transaction information
828
Verify the chargeback request by comparing the shorted amount with the purging amount
830
832
Verification successful?
Yes
No
834
Send a chargeback initiating message to the issuer
836
Issuer credits the user account with the shorted amount
Send a reporting message to the issuer of the user account, reporting the chargeback request
838
Issuer initiates an alternative chargeback processing procedure
840
Generate a request reference number (RRN) for the chargeback request
842
Generate a chargeback request processing record
844
Store the chargeback request processing record in association with the RRN
846
Send a processing result message to the ATM to inform the user of the chargeback request processing result
848
Cause the ATM to print a receipt bearing the RRN
850

Fig. 8B

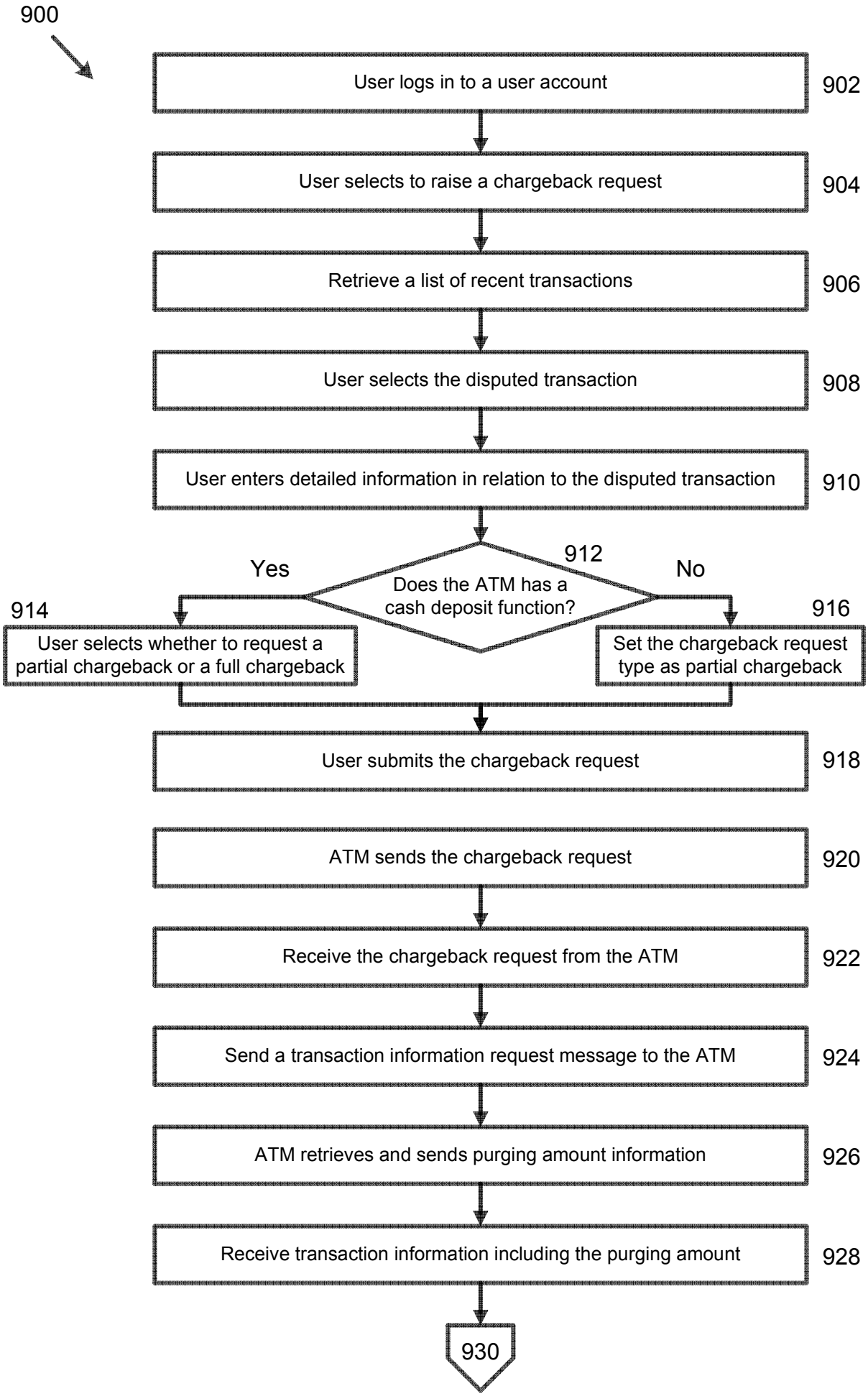
900
User logs in to a user account
902
User selects to raise a chargeback request
904
Retrieve a list of recent transactions
906
User selects the disputed transaction
908
User enters detailed information in relation to the disputed transaction
910
912
Does the ATM has a cash deposit function?
Yes
No
914
User selects whether to request a partial chargeback or a full chargeback
916
Set the chargeback request type as partial chargeback
User submits the chargeback request
918
ATM sends the chargeback request
920
Receive the chargeback request from the ATM
922
Send a transaction information request message to the ATM
924
ATM retrieves and sends purging amount information
926
Receive transaction information including the purging amount
928
930

Fig. 9A

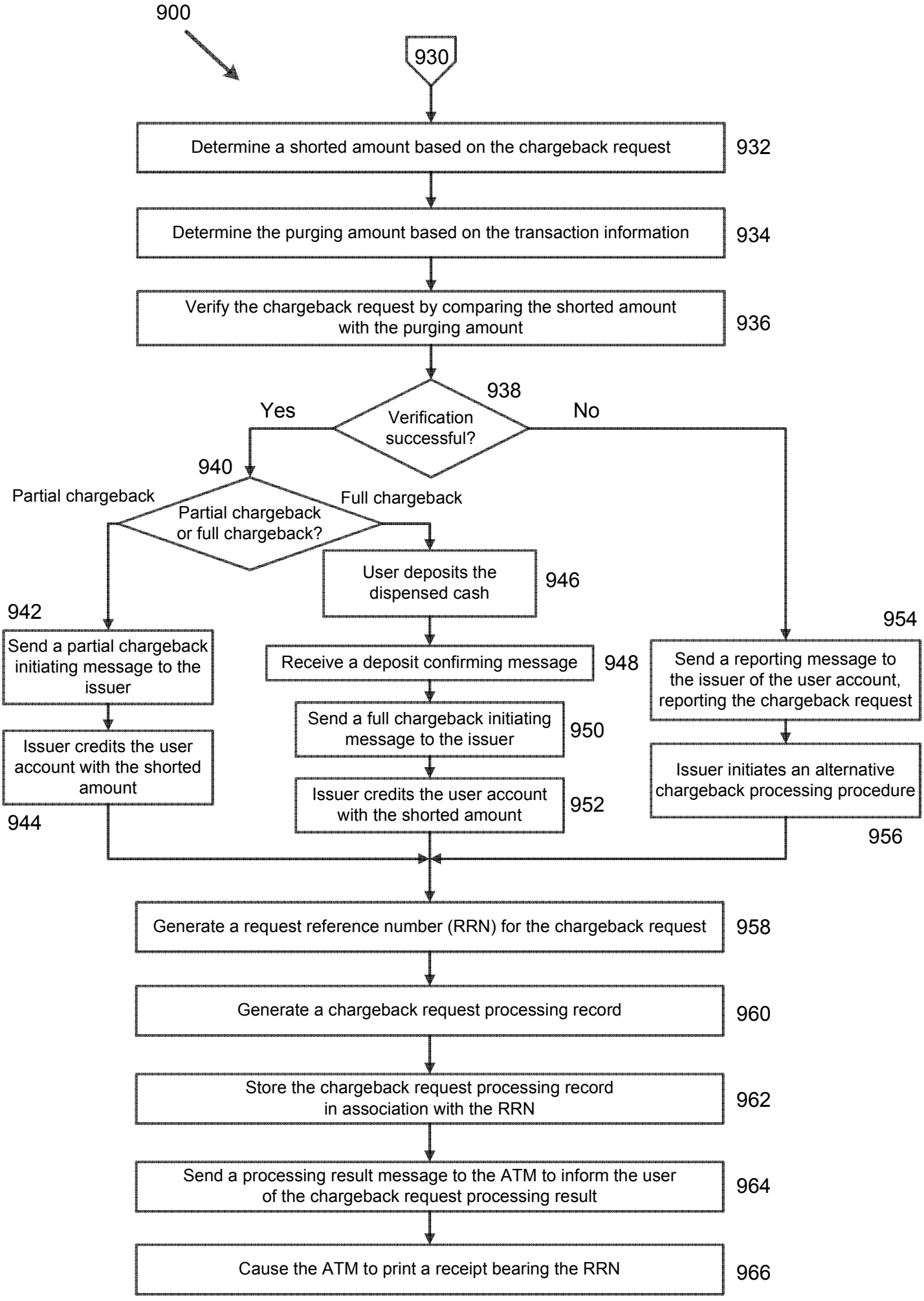
900
930
Determine a shorted amount based on the chargeback request
932
Determine the purging amount based on the transaction information
934
Verify the chargeback request by comparing the shorted amount with the purging amount
936
938
Verification successful?
Yes
No
940
Partial chargeback or full chargeback?
Partial chargeback
Full chargeback
942
Send a partial chargeback initiating message to the issuer
Issuer credits the user account with the shorted amount
944
User deposits the dispensed cash
946
Receive a deposit confirming message
948
Send a full chargeback initiating message to the issuer
950
Issuer credits the user account with the shorted amount
952
954
Send a reporting message to the issuer of the user account, reporting the chargeback request
Issuer initiates an alternative chargeback processing procedure
956
Generate a request reference number (RRN) for the chargeback request
958
Generate a chargeback request processing record
960
Store the chargeback request processing record in association with the RRN
962
Send a processing result message to the ATM to inform the user of the chargeback request processing result
964
Cause the ATM to print a receipt bearing the RRN
966

Fig. 9B