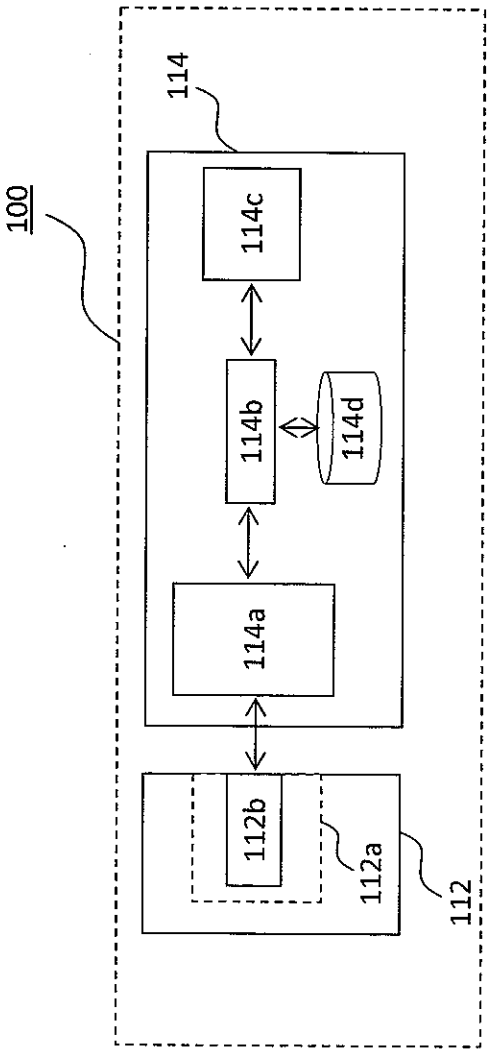

Fig. 1

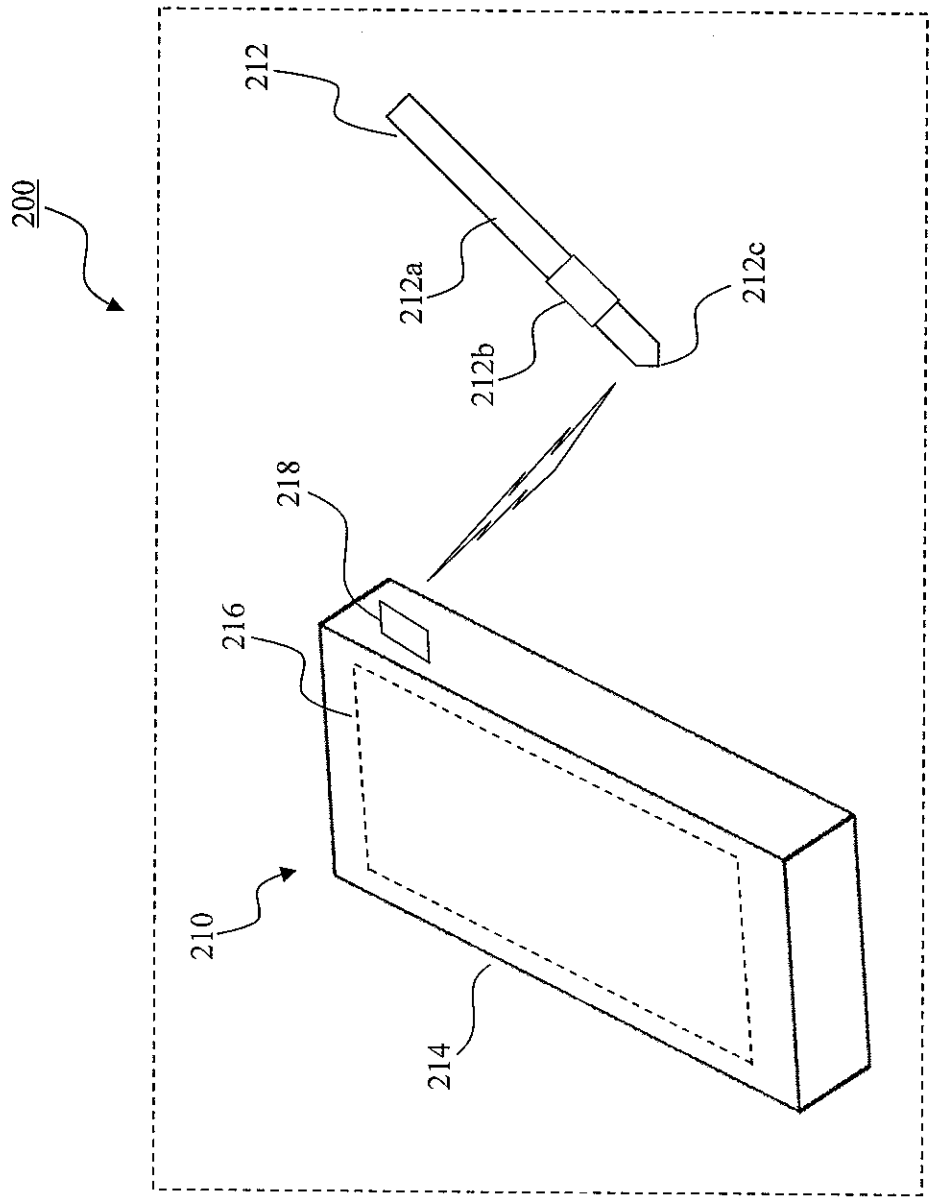

Fig. 2a

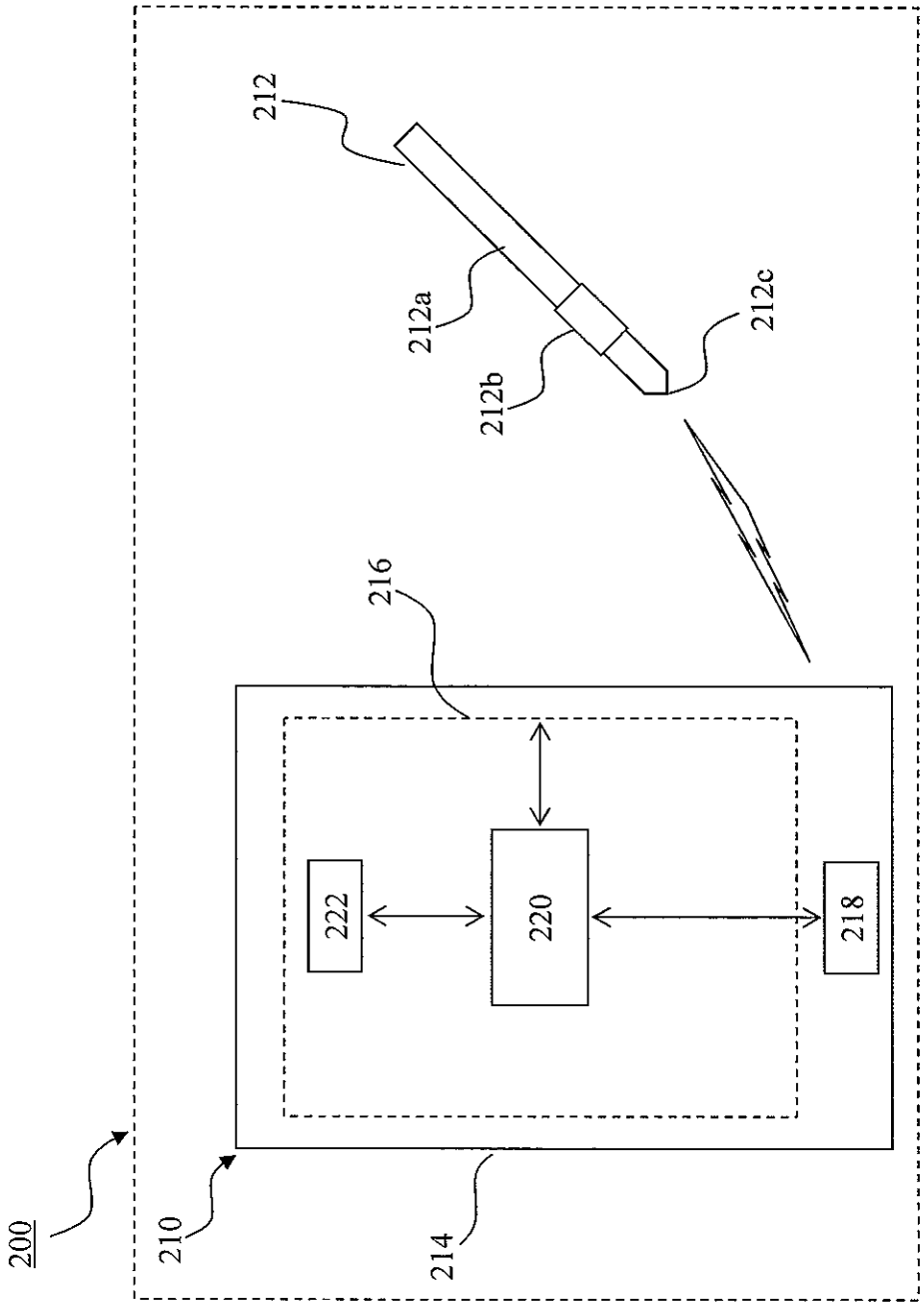

Fig. 2b

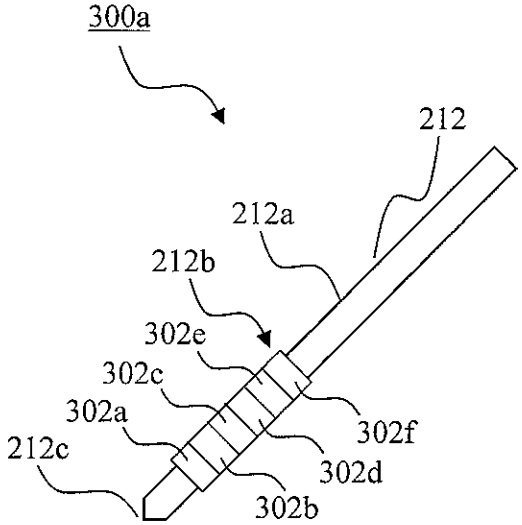

Fig. 3a

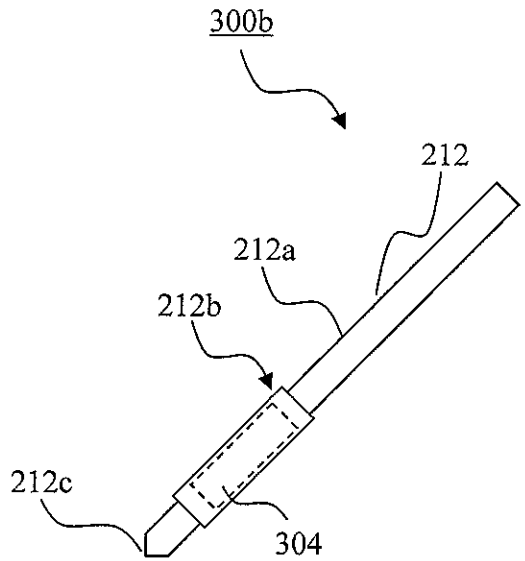

Fig. 3b

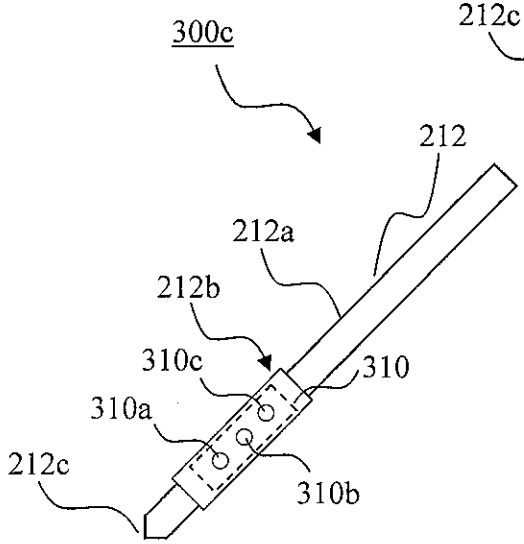

Fig. 3c

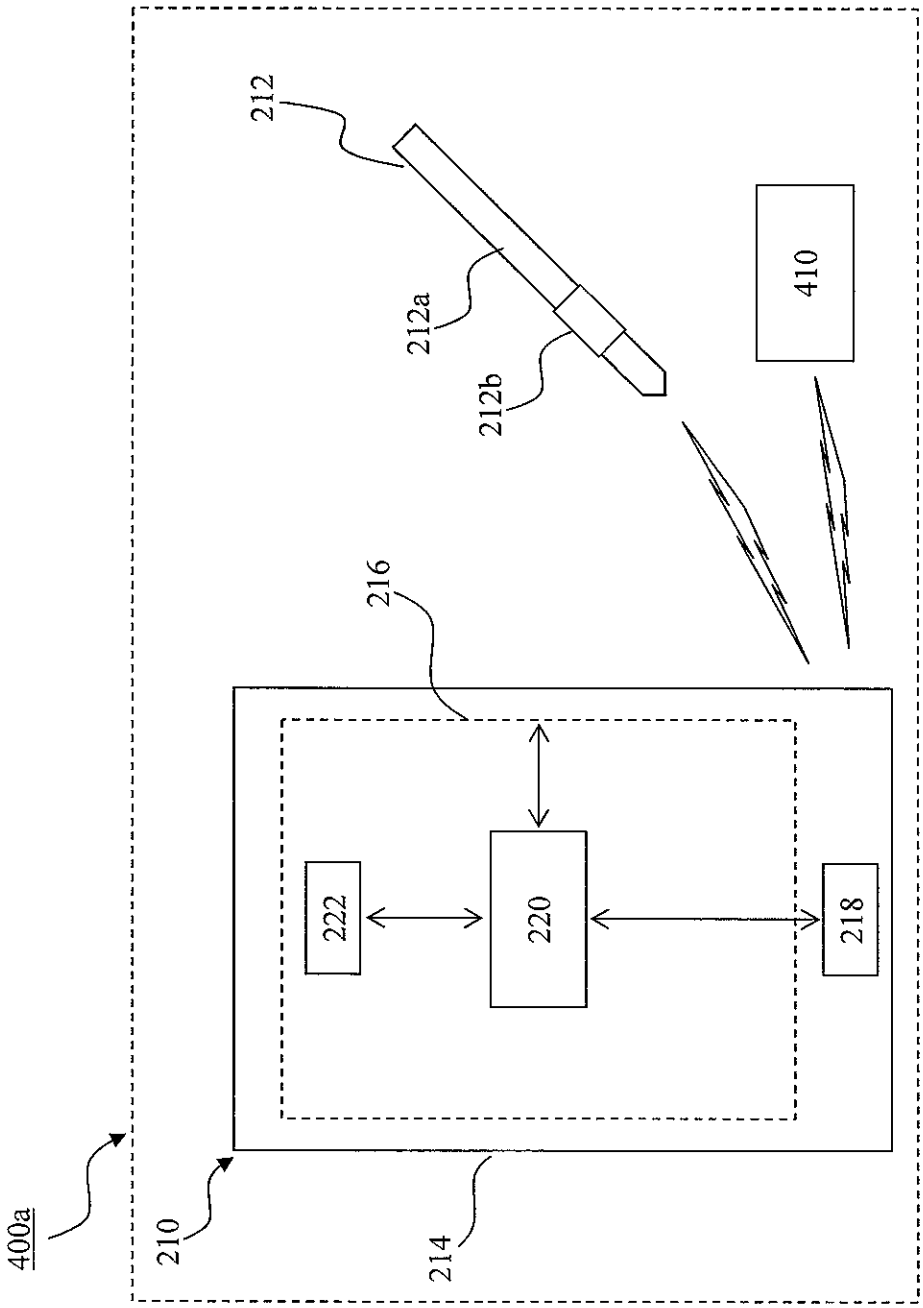

Fig. 4a

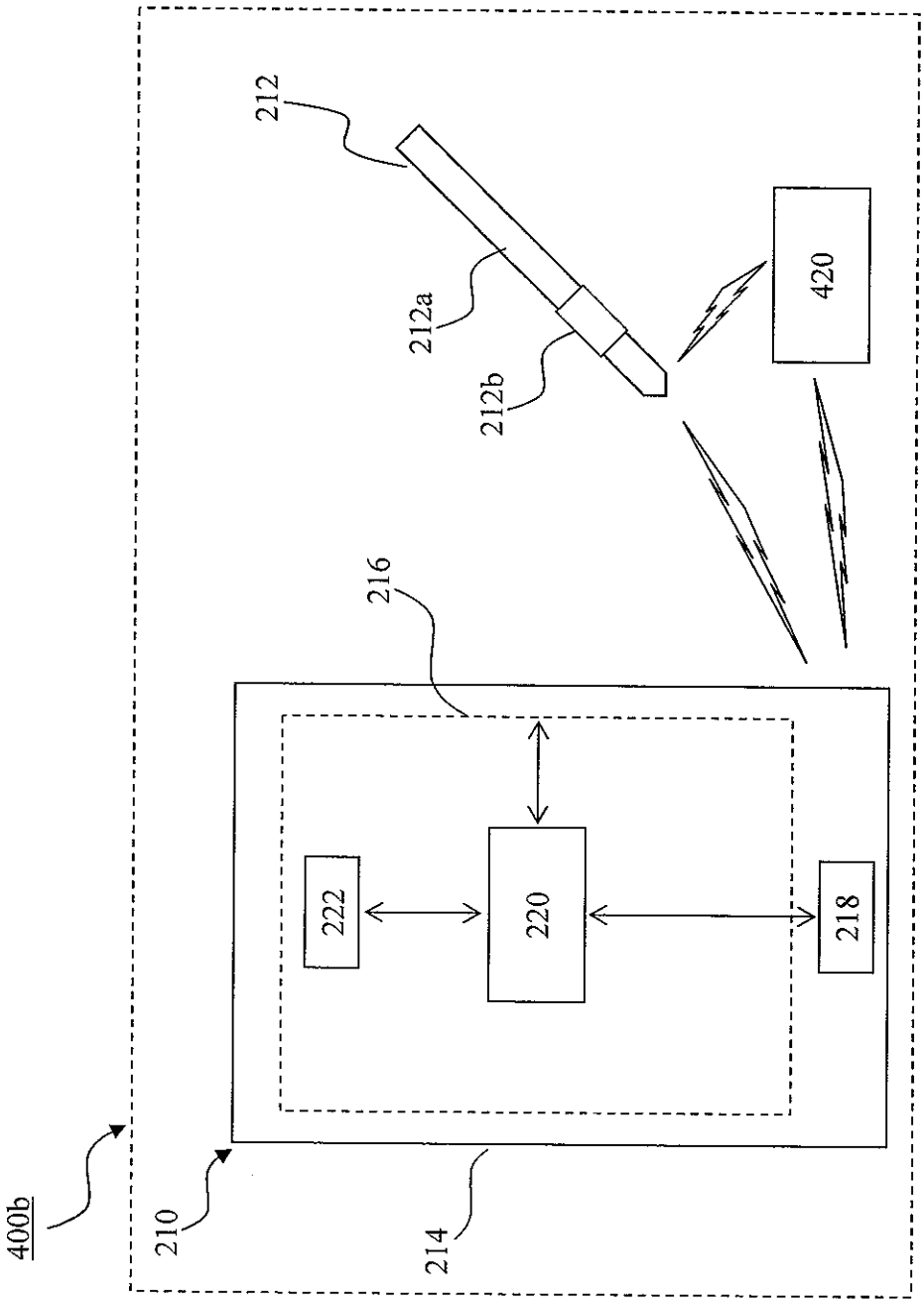

Fig. 4b

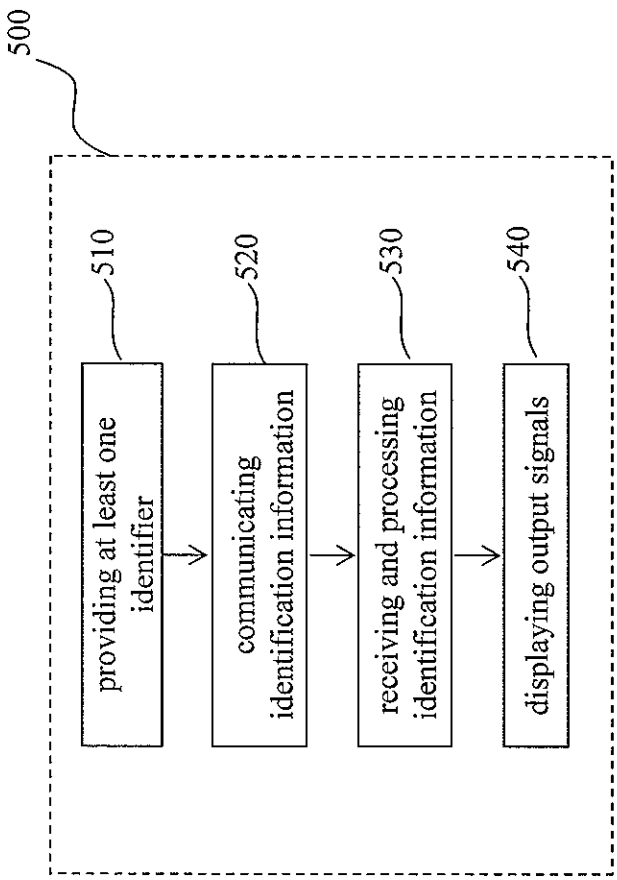
500
510
providing at least one identifier
520
communicating identification information
530
receiving and processing identification information
540
displaying output signals

Fig. 5