FIG.1

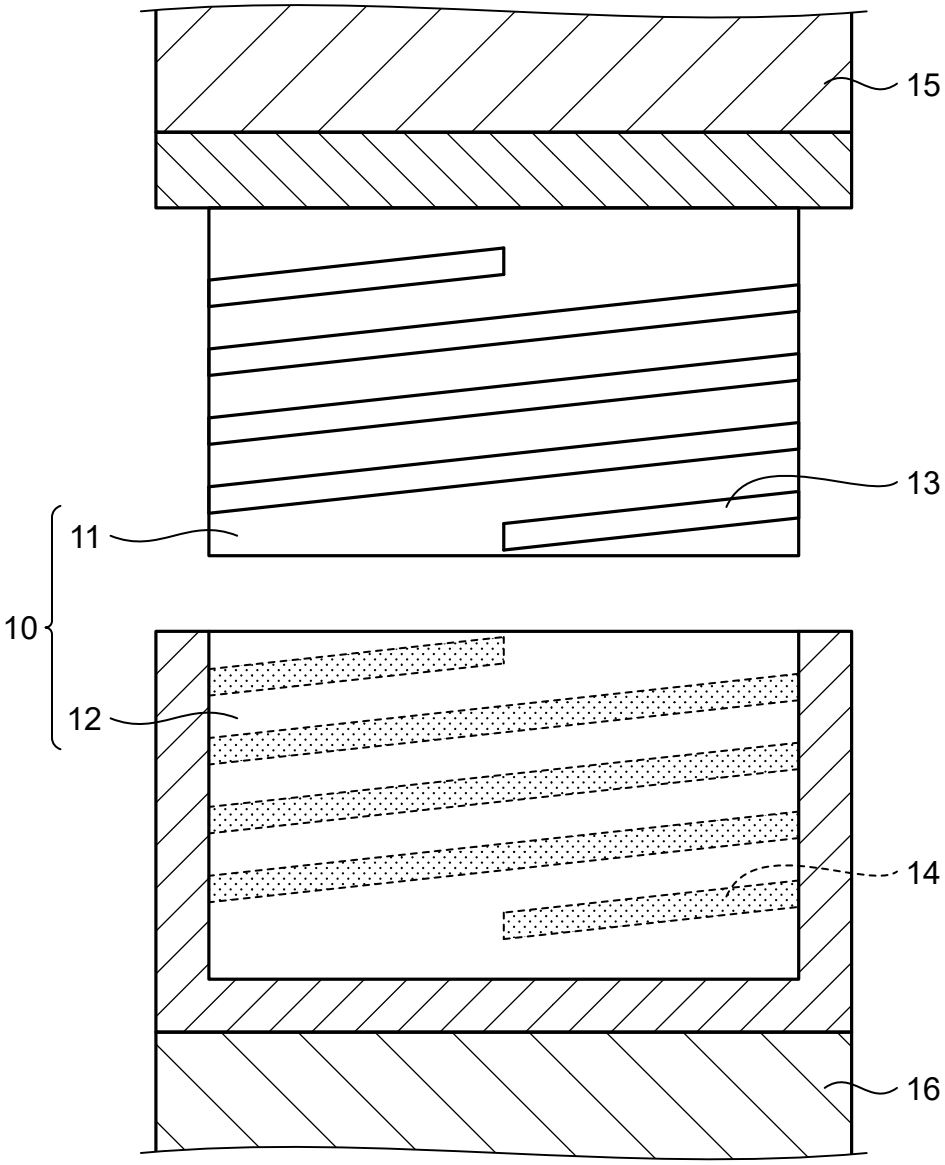

FIG.2A

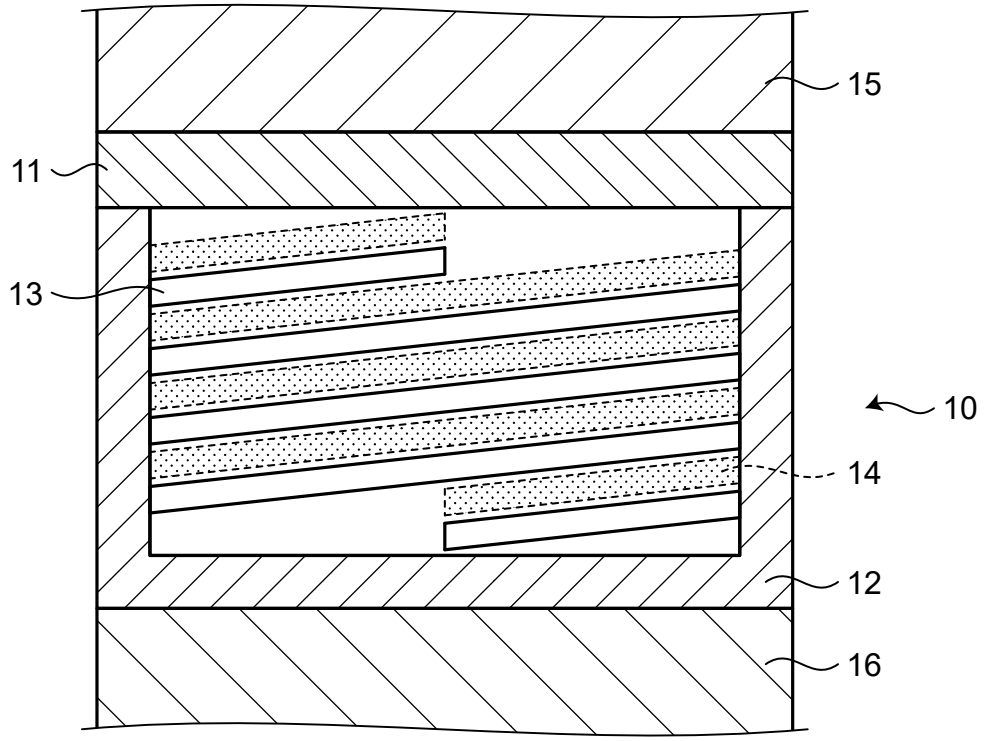

FIG.2B

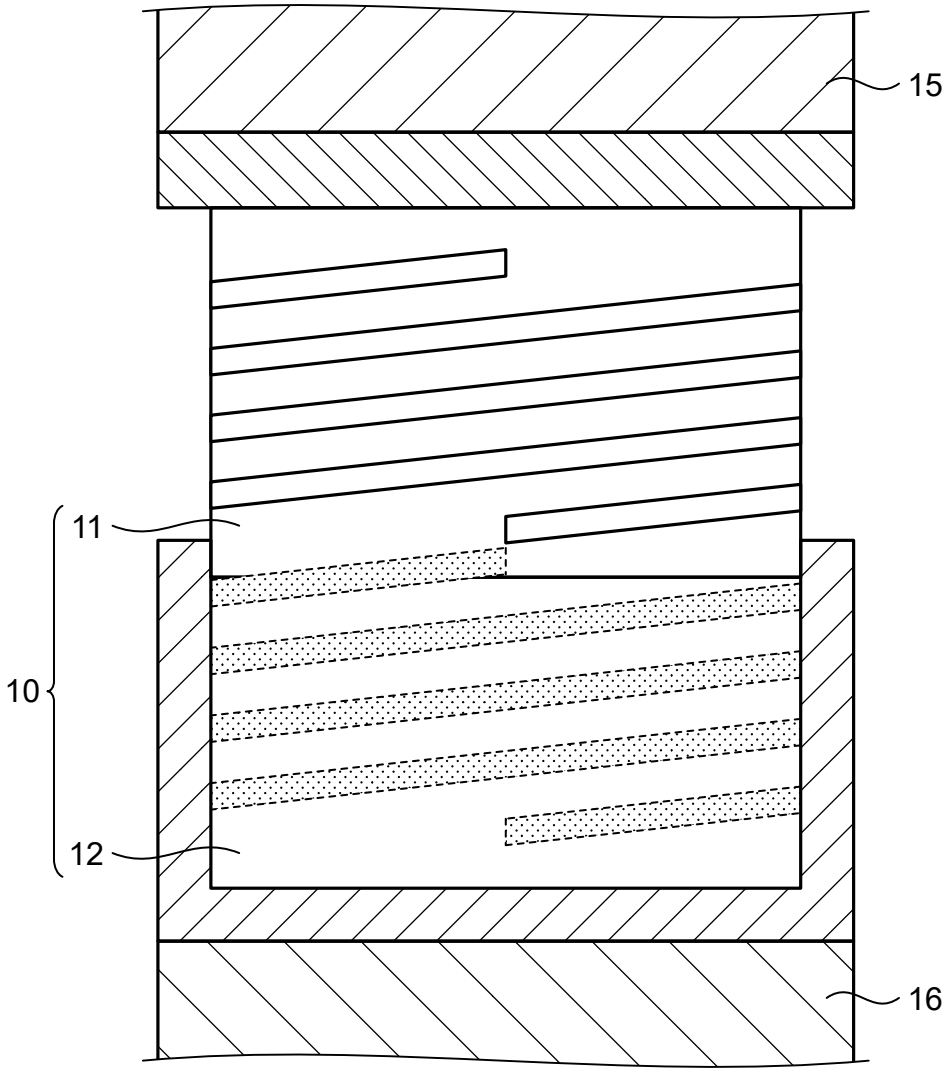

FIG.3

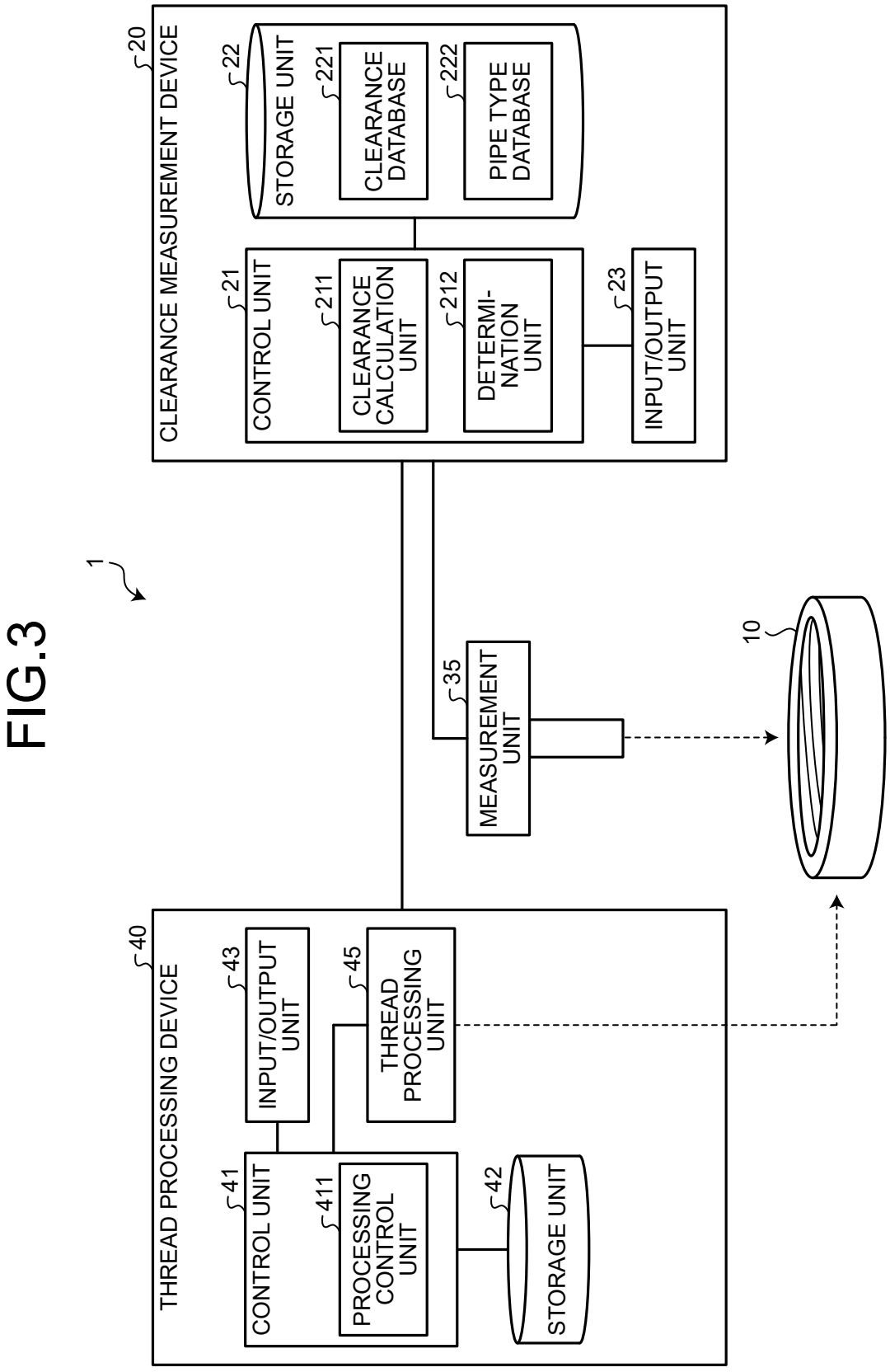
1
20
CLEARANCE MEASUREMENT DEVICE
22
STORAGE UNIT
221
CLEARANCE DATABASE
222
PIPE TYPE DATABASE
21
CONTROL UNIT
211
CLEARANCE CALCULATION UNIT
212
DETERMI-NATION UNIT
23
INPUT/OUTPUT UNIT
35
MEASUREMENT UNIT
10
40
THREAD PROCESSING DEVICE
43
INPUT/OUTPUT UNIT
45
THREAD PROCESSING UNIT
41
CONTROL UNIT
411
PROCESSING CONTROL UNIT
42
STORAGE UNIT

FIG.4

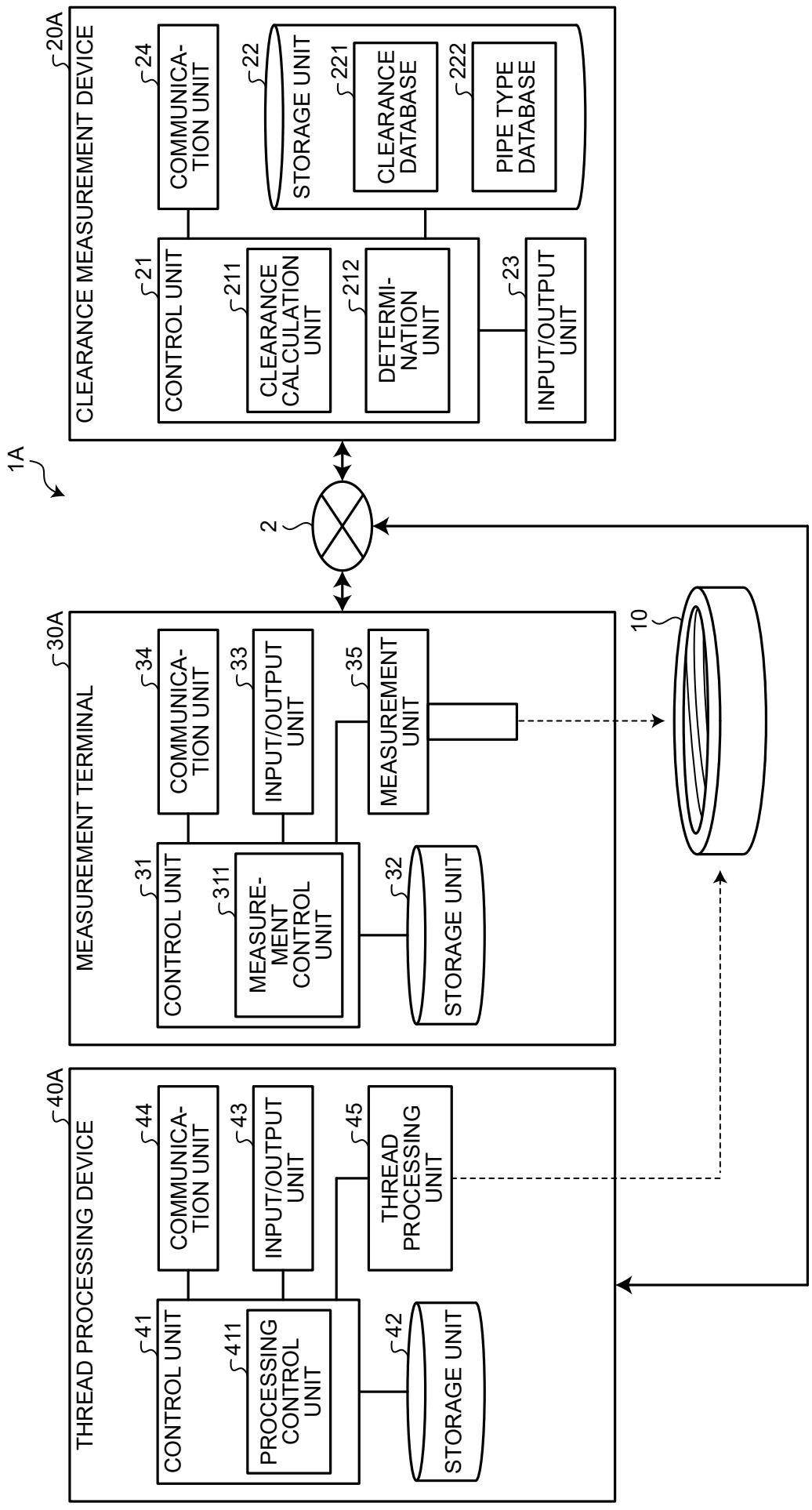
1A
2
10
20A
CLEARANCE MEASUREMENT DEVICE
24
COMMUNICA-TION UNIT
22
STORAGE UNIT
221
CLEARANCE DATABASE
222
PIPE TYPE DATABASE
21
CONTROL UNIT
211
CLEARANCE CALCULATION UNIT
212
DETERMI-NATION UNIT
23
INPUT/OUTPUT UNIT
30A
MEASUREMENT TERMINAL
34
COMMUNICA-TION UNIT
33
INPUT/OUTPUT UNIT
35
MEASUREMENT UNIT
31
CONTROL UNIT
311
MEASURE-MENT CONTROL UNIT
32
STORAGE UNIT
40A
THREAD PROCESSING DEVICE
44
COMMUNICA-TION UNIT
43
INPUT/OUTPUT UNIT
45
THREAD PROCESSING UNIT
41
CONTROL UNIT
411
PROCESSING CONTROL UNIT
42
STORAGE UNIT

FIG.5

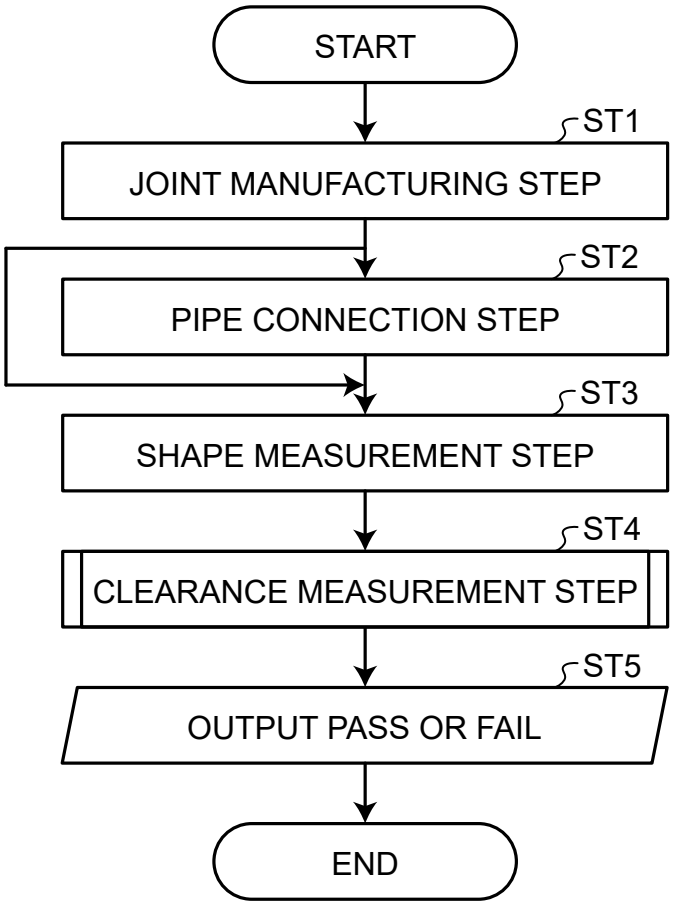
START
ST1
JOINT MANUFACTURING STEP
ST2
PIPE CONNECTION STEP
ST3
SHAPE MEASUREMENT STEP
ST4
CLEARANCE MEASUREMENT STEP
ST5
OUTPUT PASS OR FAIL
END

FIG.6A

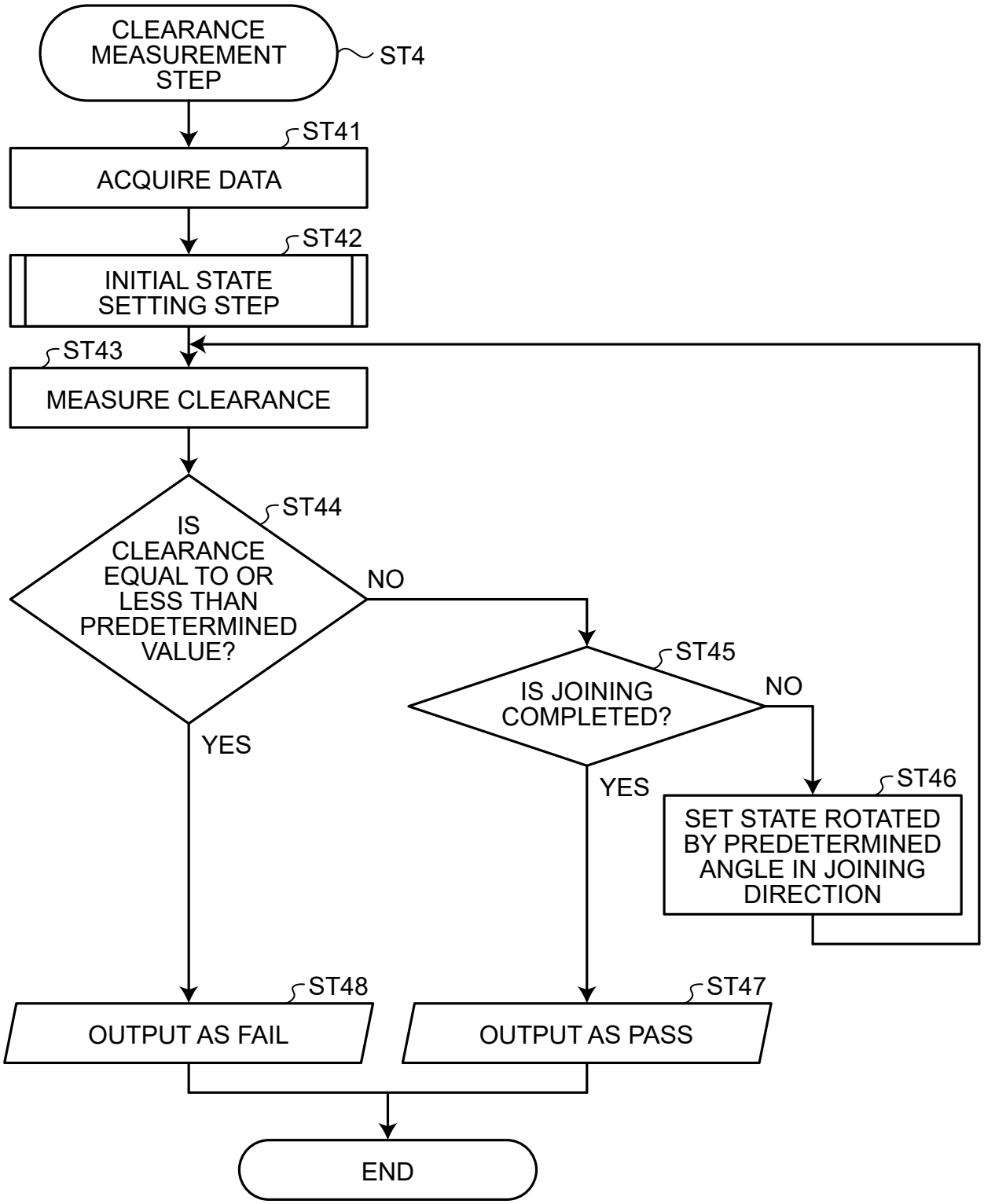
CLEARANCE MEASUREMENT STEP
ST4
ST41
ACQUIRE DATA
ST42
INITIAL STATE SETTING STEP
ST43
MEASURE CLEARANCE
ST44
IS CLEARANCE EQUAL TO OR LESS THAN PREDETERMINED VALUE?
NO
YES
ST45
IS JOINING COMPLETED?
NO
YES
ST46
SET STATE ROTATED BY PREDETERMINED ANGLE IN JOINING DIRECTION
ST48
OUTPUT AS FAIL
ST47
OUTPUT AS PASS
END

FIG.6B

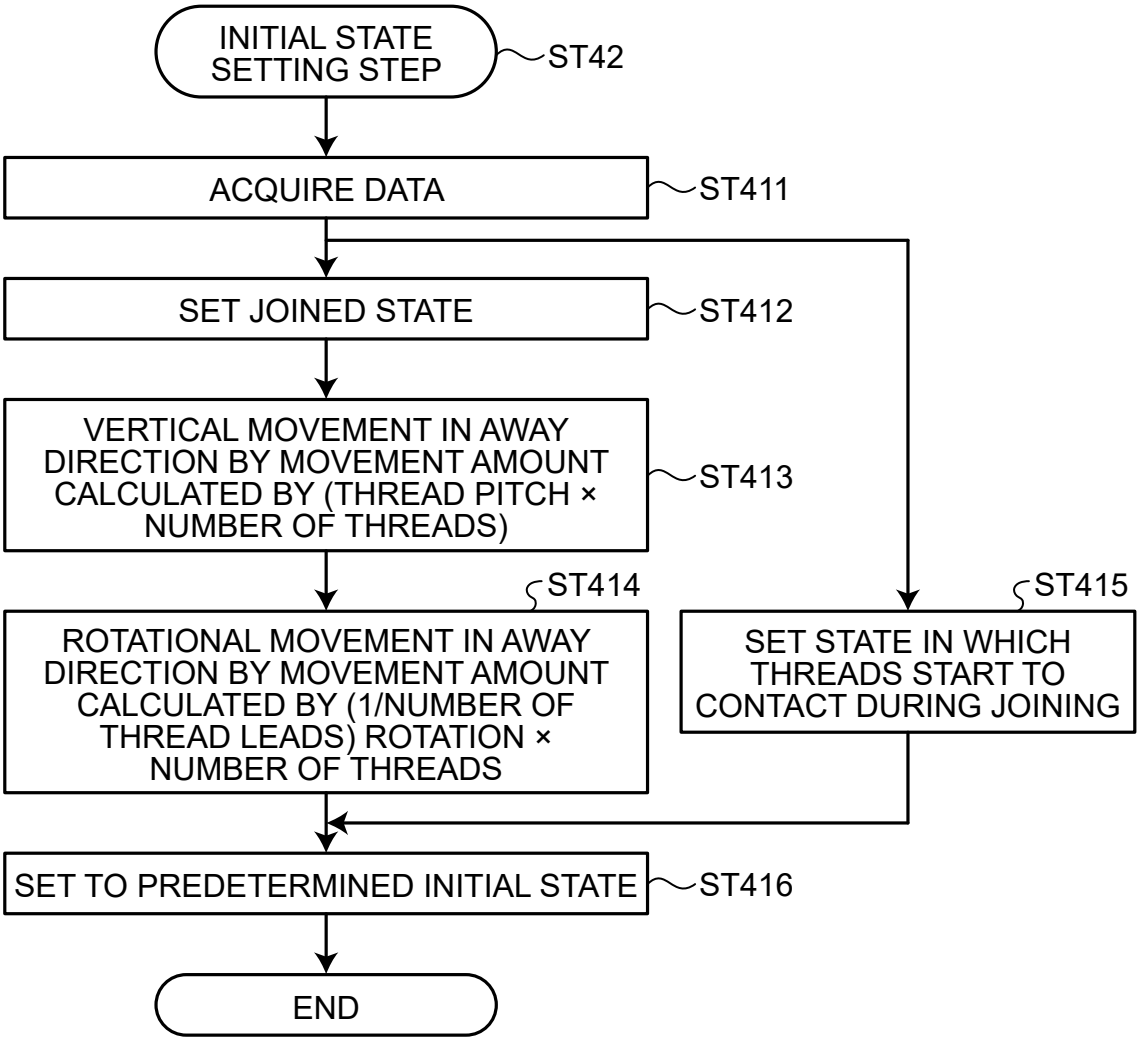
INITIAL STATE SETTING STEP
ST42
ACQUIRE DATA
ST411
SET JOINED STATE
ST412
VERTICAL MOVEMENT IN AWAY DIRECTION BY MOVEMENT AMOUNT CALCULATED BY (THREAD PITCH × NUMBER OF THREADS)
ST413
ST414
ROTATIONAL MOVEMENT IN AWAY DIRECTION BY MOVEMENT AMOUNT CALCULATED BY (1/NUMBER OF THREAD LEADS) ROTATION × NUMBER OF THREADS
ST415
SET STATE IN WHICH THREADS START TO CONTACT DURING JOINING
SET TO PREDETERMINED INITIAL STATE
ST416
END

FIG.7A

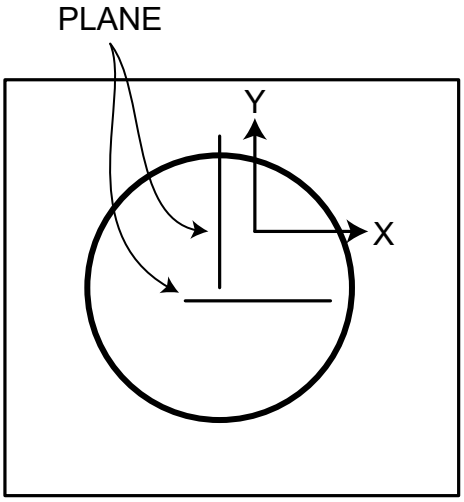

FIG.7B

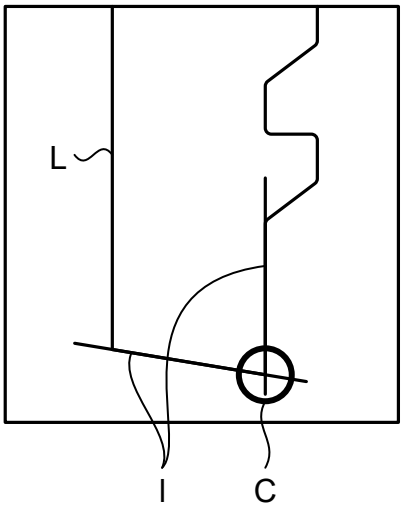

FIG.7C

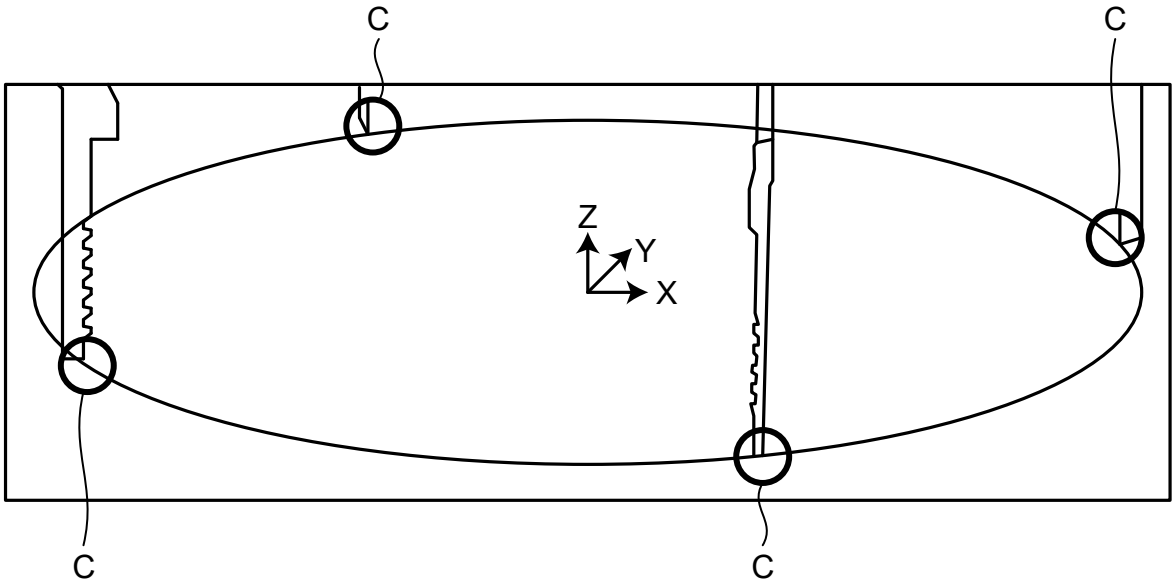

FIG.8

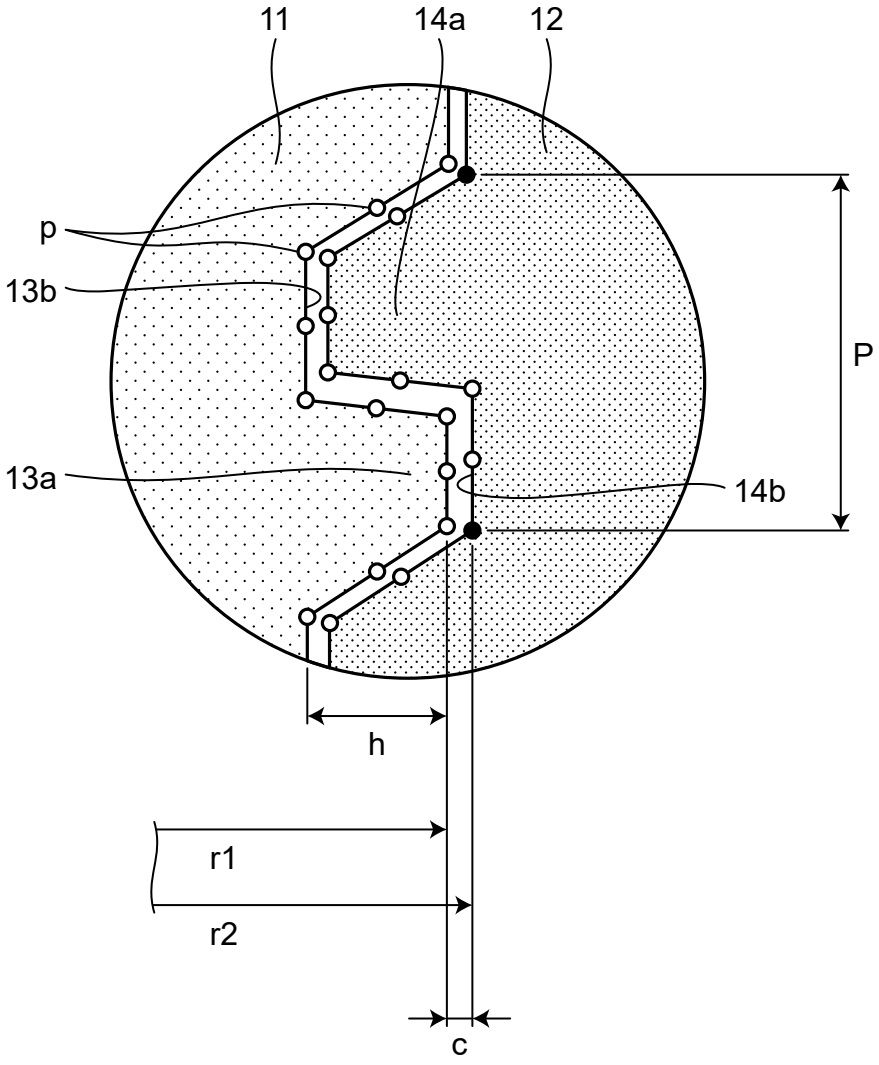

FIG.9

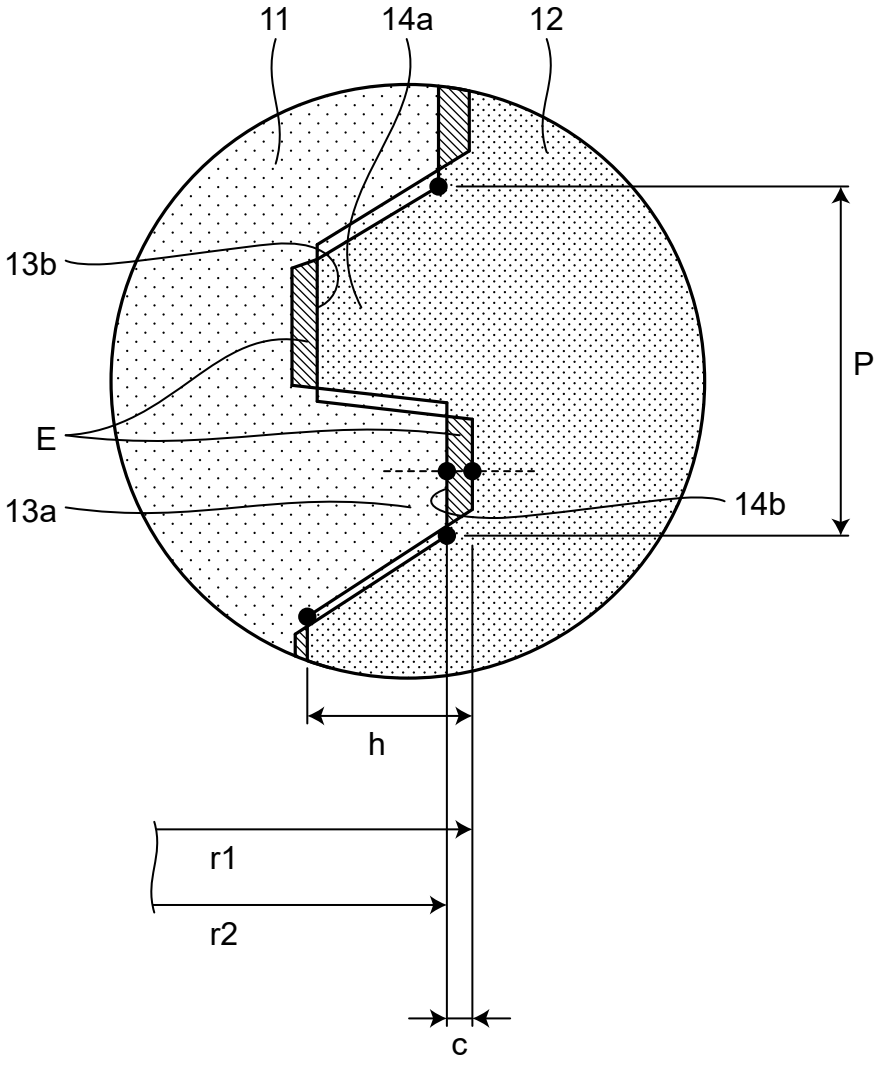

FIG.10

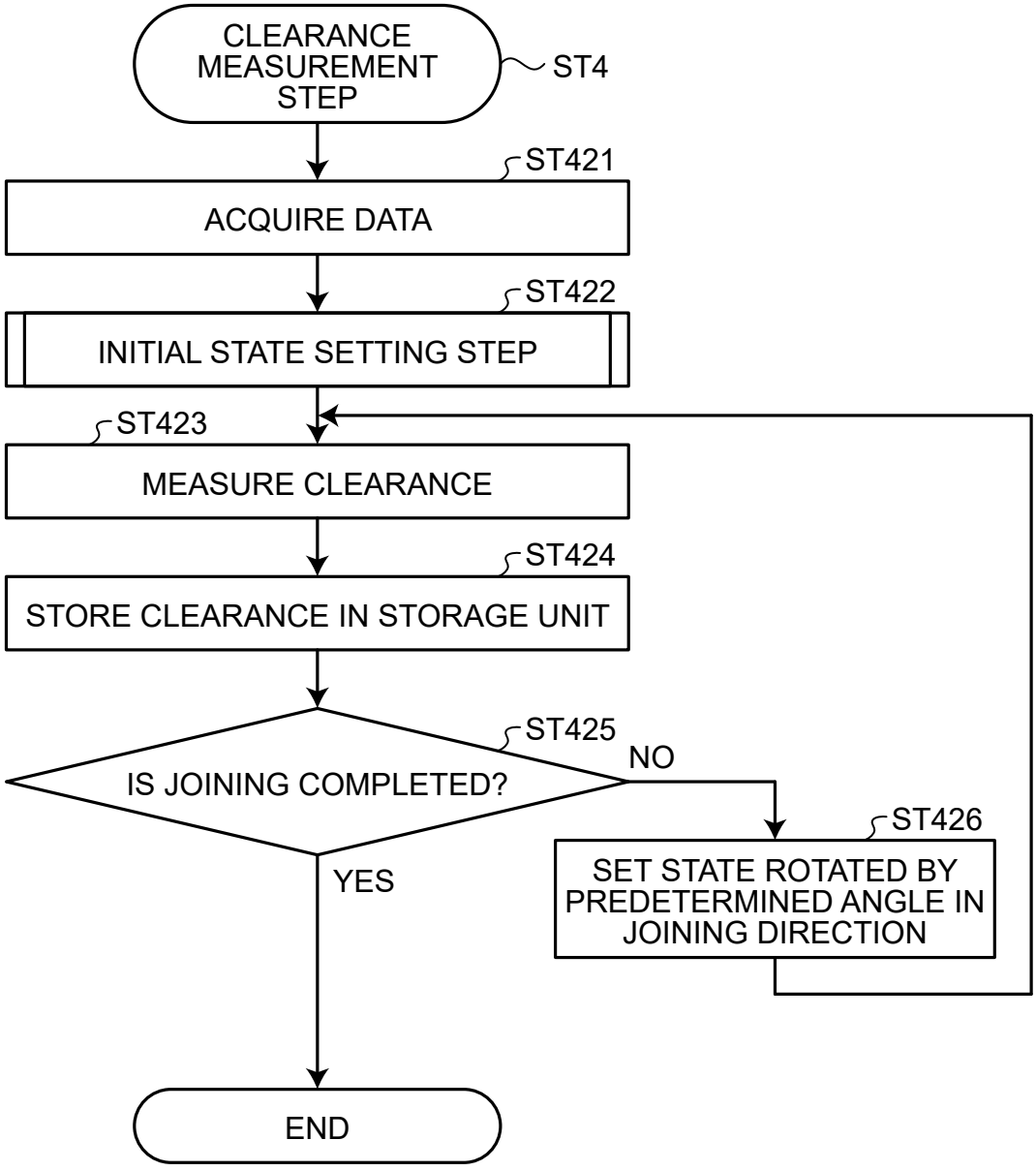
CLEARANCE MEASUREMENT STEP
ST4
ST421
ACQUIRE DATA
ST422
INITIAL STATE SETTING STEP
ST423
MEASURE CLEARANCE
ST424
STORE CLEARANCE IN STORAGE UNIT
ST425
IS JOINING COMPLETED?
NO
YES
ST426
SET STATE ROTATED BY PREDETERMINED ANGLE IN JOINING DIRECTION
END

FIG.11

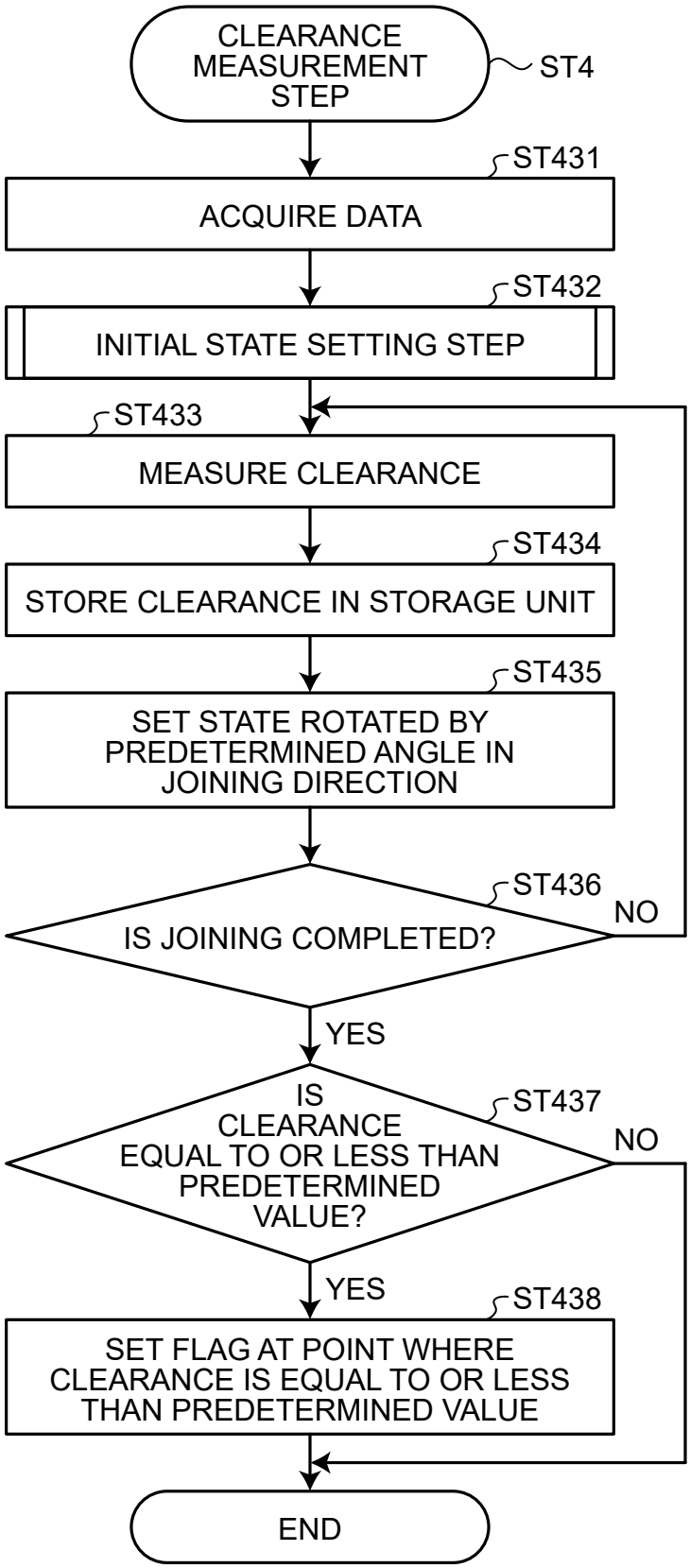
CLEARANCE MEASUREMENT STEP
ST4
ST431
ACQUIRE DATA
ST432
INITIAL STATE SETTING STEP
ST433
MEASURE CLEARANCE
ST434
STORE CLEARANCE IN STORAGE UNIT
ST435
SET STATE ROTATED BY PREDETERMINED ANGLE IN JOINING DIRECTION
ST436
IS JOINING COMPLETED?
NO
YES
IS CLEARANCE EQUAL TO OR LESS THAN PREDETERMINED VALUE?
ST437
NO
YES
ST438
SET FLAG AT POINT WHERE CLEARANCE IS EQUAL TO OR LESS THAN PREDETERMINED VALUE
END

FIG.12

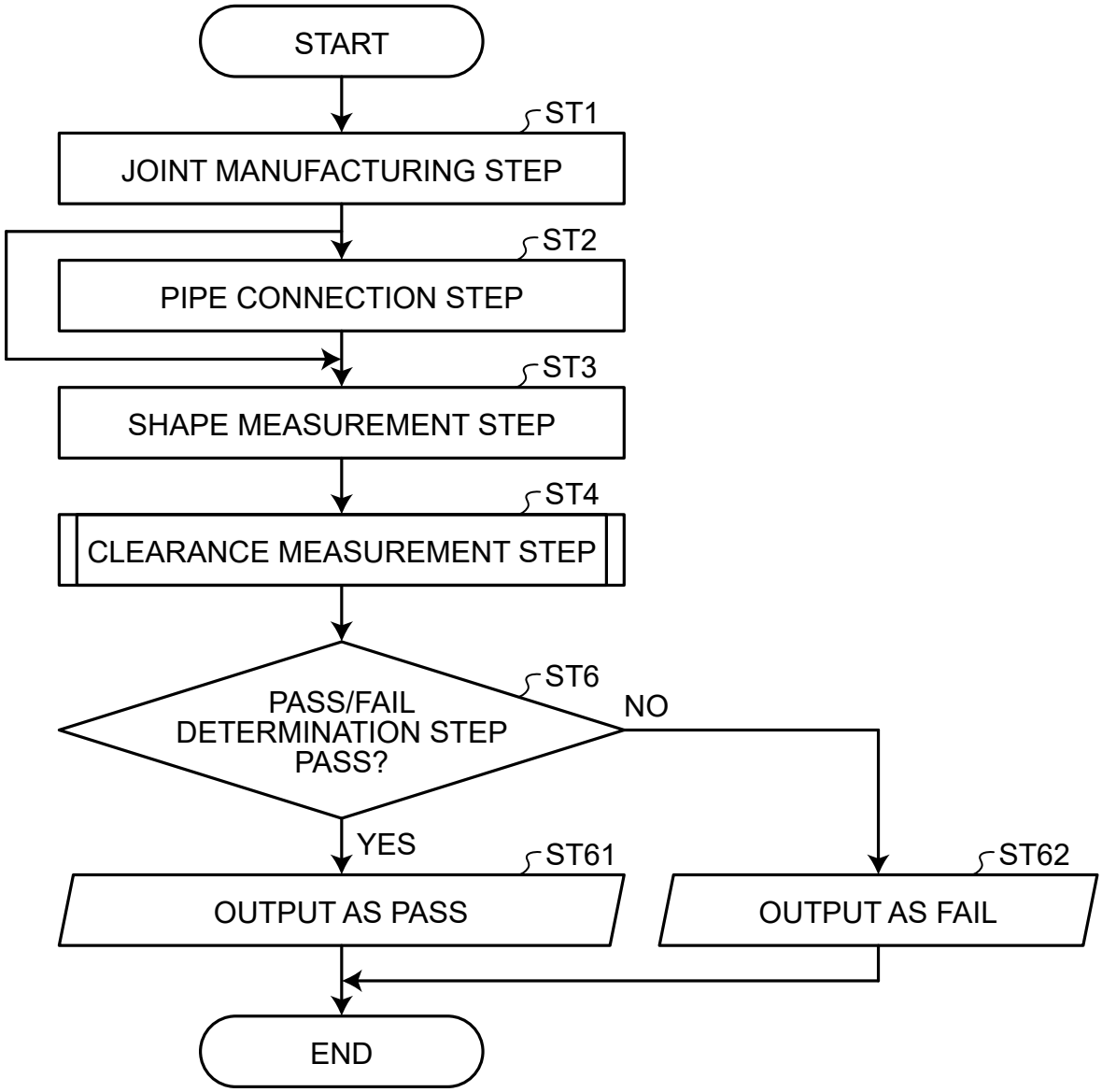
START
ST1
JOINT MANUFACTURING STEP
ST2
PIPE CONNECTION STEP
ST3
SHAPE MEASUREMENT STEP
ST4
CLEARANCE MEASUREMENT STEP
ST6
PASS/FAIL DETERMINATION STEP PASS?
NO
YES
ST61
OUTPUT AS PASS
ST62
OUTPUT AS FAIL
END

FIG.13

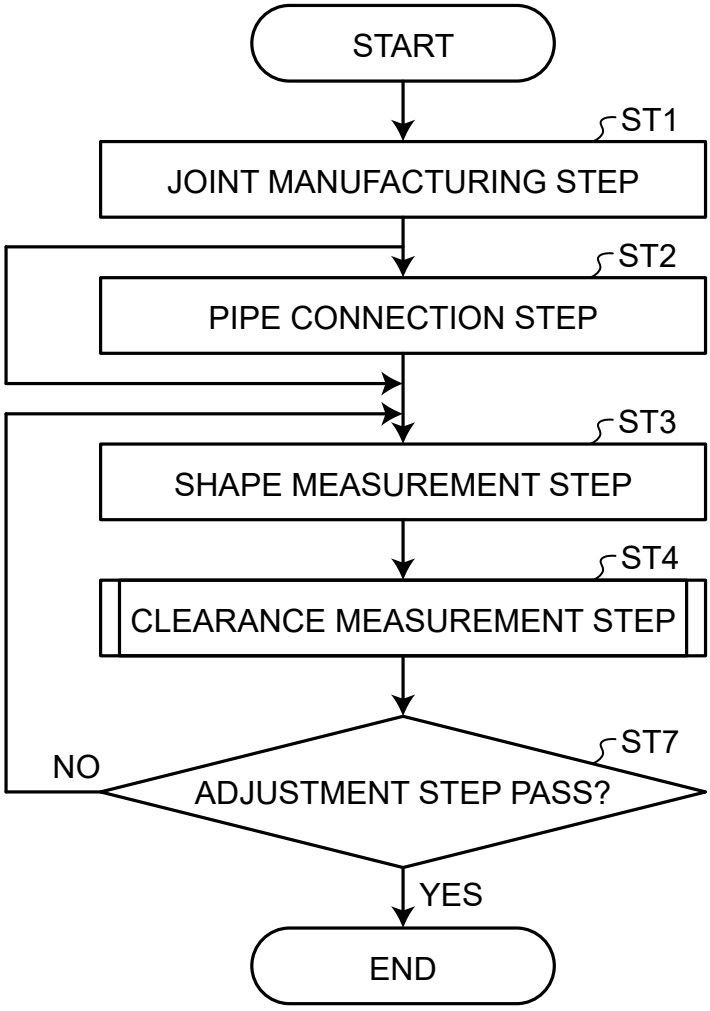
START
ST1
JOINT MANUFACTURING STEP
ST2
PIPE CONNECTION STEP
ST3
SHAPE MEASUREMENT STEP
ST4
CLEARANCE MEASUREMENT STEP
ST7
NO
ADJUSTMENT STEP PASS?
YES
END