(12) INTERNATIONAL APPLICATION PUBLISHED UNDER THE PATENT COOPERATION TREATY (PCT)

(19) World Intellectual Property Organization
International Bureau

(43) International Publication Date
12 July 2007 (12.07.2007)

PCT

(10) International Publication Number
WO 2007/078441 A1

(51) International Patent Classification:
F02K 1/00 (2006.01)

(21) International Application Number:
PCT/US2006/044621

(22) International Filing Date:
16 November 2006 (16.11.2006)

(25) Filing Language: English

(26) Publication Language: English

(30) Priority Data:
11/316,170 22 December 2005 (22.12.2005) US

(63) Related by continuation (CON) or continuation-in-part (CIP) to earlier application:
US 11/316,170 (CON)
Filed on 22 December 2005 (22.12.2005)

(71) Applicant *(for all designated States except US)*: **TENNECO AUTOMOTIVE OPERATING COMPANY INC.** [US/US]; 500 NORTH FIELD DRIVE, Lake Forest, IL 60045 (US).

(72) Inventors; and

(75) Inventors/Applicants *(for US only)*: **GIRARD, James W.** [US/US]; 2048 CHARLTON ST., #202, Ann Arbor, MI 48103 (US). **LACIN, Figen** [US/US]; 7044 WILSON ST., Dexter, MI 48130 (US).

(74) Agents: **HARRIS, Gordon K., Jr.** et al.; HARNESS, DICKEY & PIERCE, P.L.C., P.O. BOX 828, Bloomfield Hills, MI 48303 (US).

(81) Designated States *(unless otherwise indicated, for every kind of national protection available)*: AE, AG, AL, AM, AT, AU, AZ, BA, BB, BG, BR, BW, BY, BZ, CA, CH, CN, CO, CR, CU, CZ, DE, DK, DM, DZ, EC, EE, EG, ES, FI, GB, GD, GE, GH, GM, GT, HN, HR, HU, ID, IL, IN, IS, JP, KE, KG, KM, KN, KP, KR, KZ, LA, LC, LK, LR, LS, LT, LU, LV, LY, MA, MD, MG, MK, MN, MW, MX, MY, MZ, NA, NG, NI, NO, NZ, OM, PG, PH, PL, PT, RO, RS, RU, SC, SD, SE, SG, SK, SL, SM, SV, SY, TJ, TM, TN, TR, TT, TZ, UA, UG, US (patent), UZ, VC, VN, ZA, ZM, ZW.

(84) Designated States *(unless otherwise indicated, for every kind of regional protection available)*: ARIPO (BW, GH, GM, KE, LS, MW, MZ, NA, SD, SL, SZ, TZ, UG, ZM, ZW), Eurasian (AM, AZ, BY, KG, KZ, MD, RU, TJ, TM), European (AT, BE, BG, CH, CY, CZ, DE, DK, EE, ES, FI, FR, GB, GR, HU, IE, IS, IT, LT, LU, LV, MC, NL, PL, PT,

[Continued on next page]

(54) Title: EXHAUST DISPERSION DEVICE

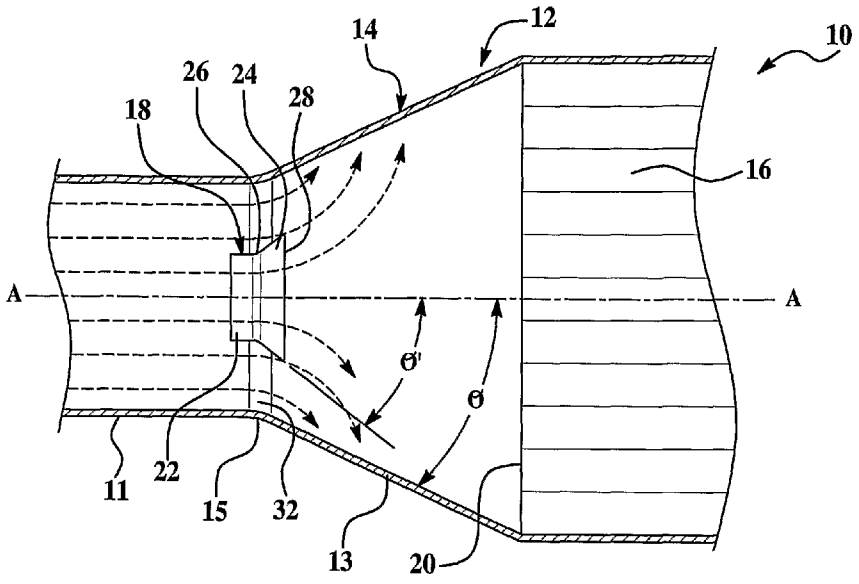

(57) Abstract: An exhaust dispersion device for an exhaust system with an outer flow member is disclosed. The exhaust dispersion device includes a dispersion member capable of being disposed within the outer flow member. The dispersion member defines an axis and includes an upstream end and a downstream end. A cross section of the downstream end perpendicular to the axis is larger than a cross section of the upstream end perpendicular to the axis. The dispersion device also includes an aperture extending through the dispersion member. The aperture is coaxial with the axis. Flow of all exhaust gas through the outer flow member is divided between flow through the aperture and flow between the outer flow member and the dispersion member. The dispersion member is operable to divert the flow of the exhaust gas at least partially toward the outer flow member.

WO 2007/078441 A1

RO, SE, SI, SK, TR), OAPI (BF, BJ, CF, CG, CI, CM, GA, GN, GQ, GW, ML, MR, NE, SN, TD, TG).

Declarations under Rule 4.17:

— *as to applicant's entitlement to apply for and be granted a patent (Rule 4.17(ii))*

— *as to the applicant's entitlement to claim the priority of the earlier application (Rule 4.17(iii))*

Published:

— *with international search report*

— *before the expiration of the time limit for amending the claims and to be republished in the event of receipt of amendments*

For two-letter codes and other abbreviations, refer to the "Guidance Notes on Codes and Abbreviations" appearing at the beginning of each regular issue of the PCT Gazette.