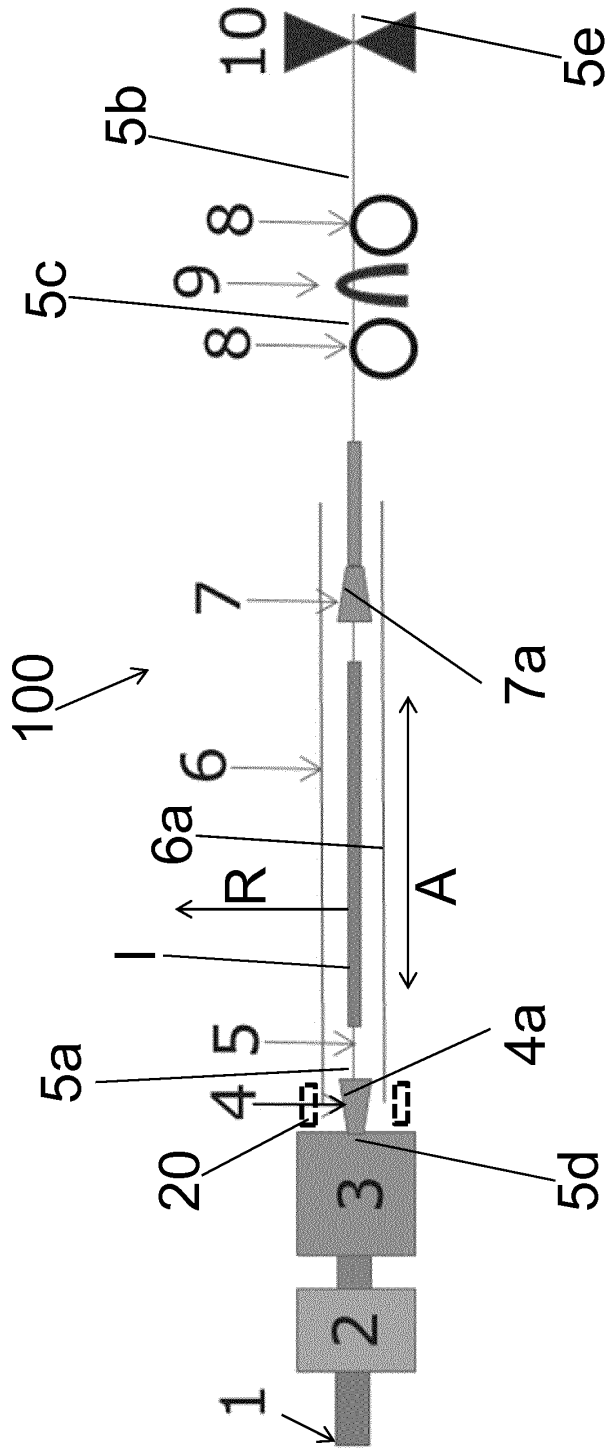

FIG. 1

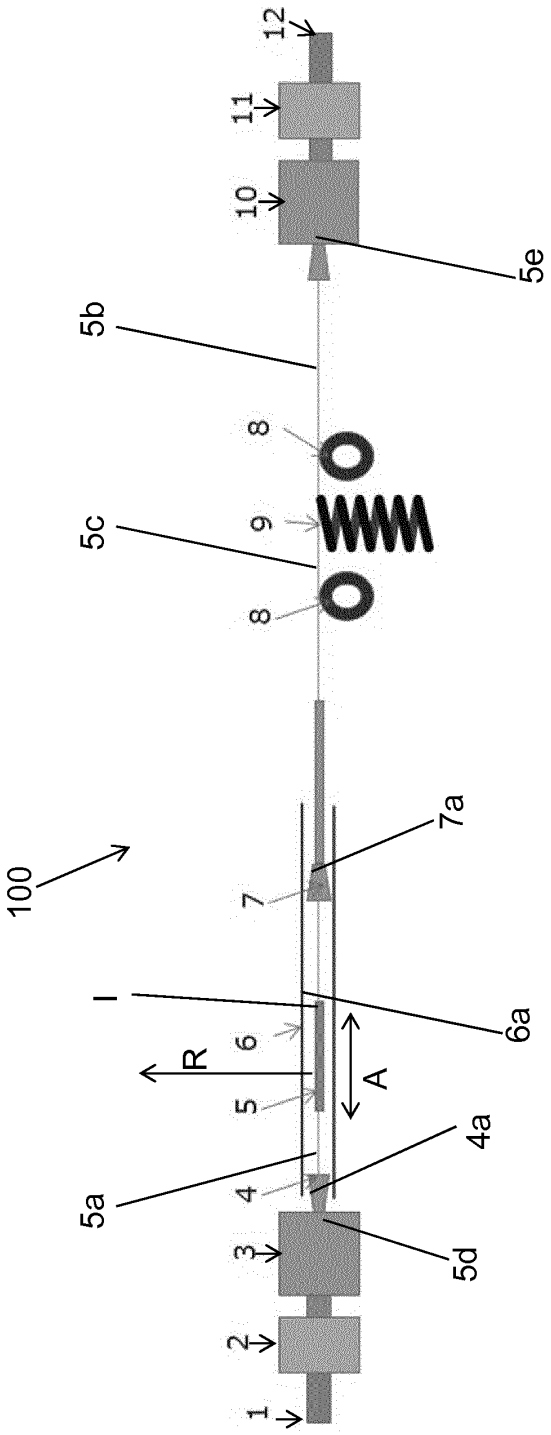

FIG. 2

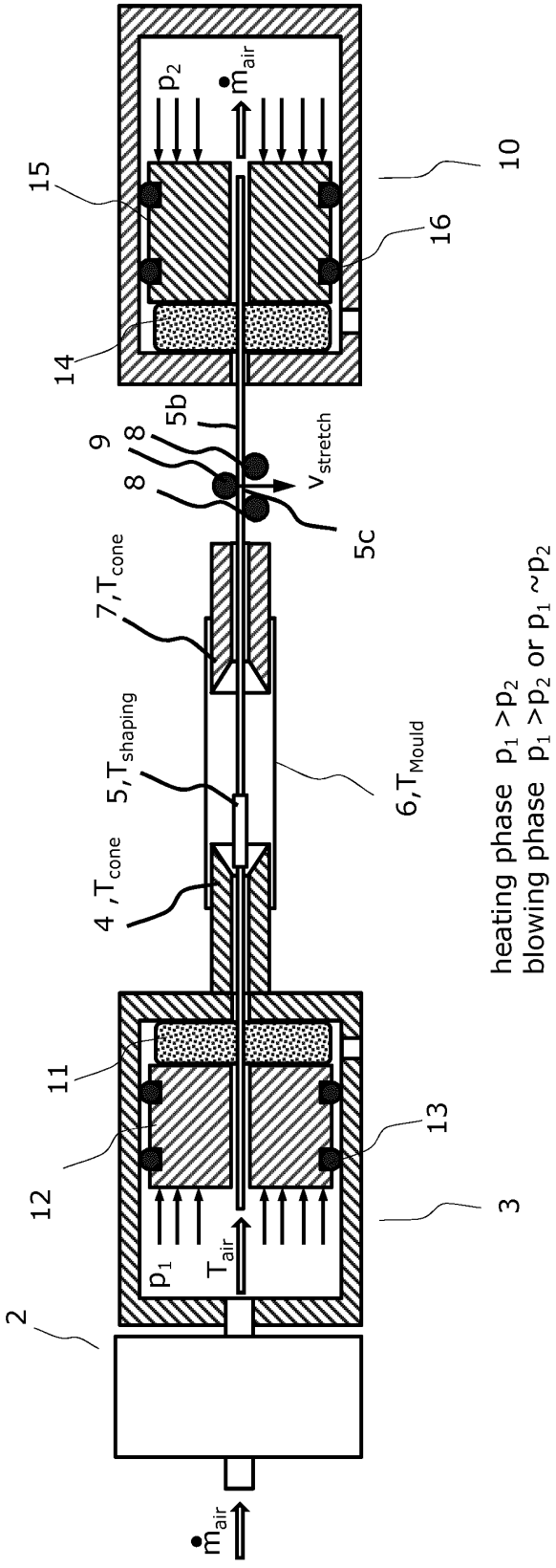
p2
ṁair
15
10
16
14
5b
9
8
8
vstretch
5c
7,Tcone
5,Tshaping
6,TMould
4 ,Tcone
11
13
12
3
p1
Tair
2
ṁair
heating phase p1 >p2
blowing phase p1 >p2 or p1 ~p2

FIG. 3