FIG.1

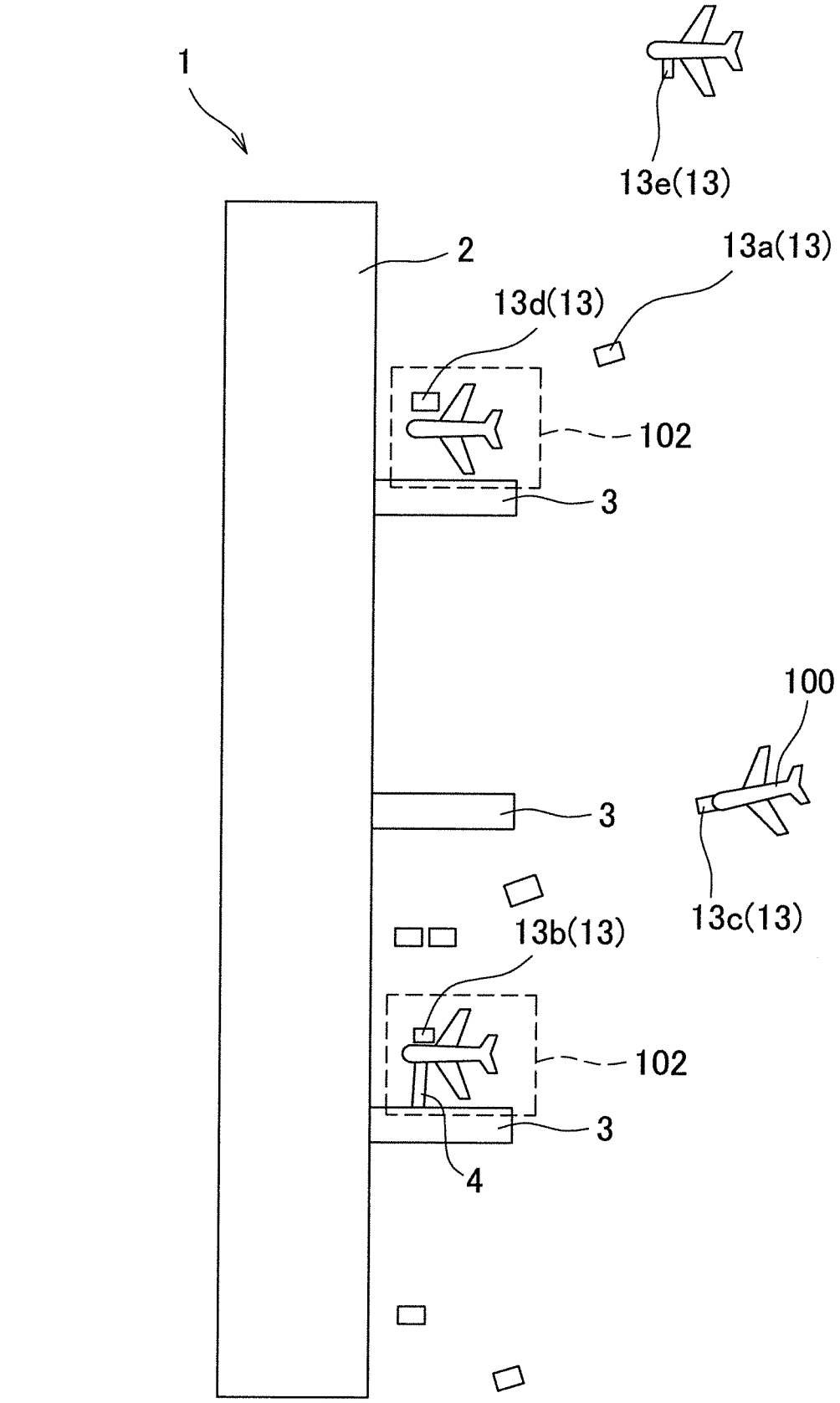

FIG.2

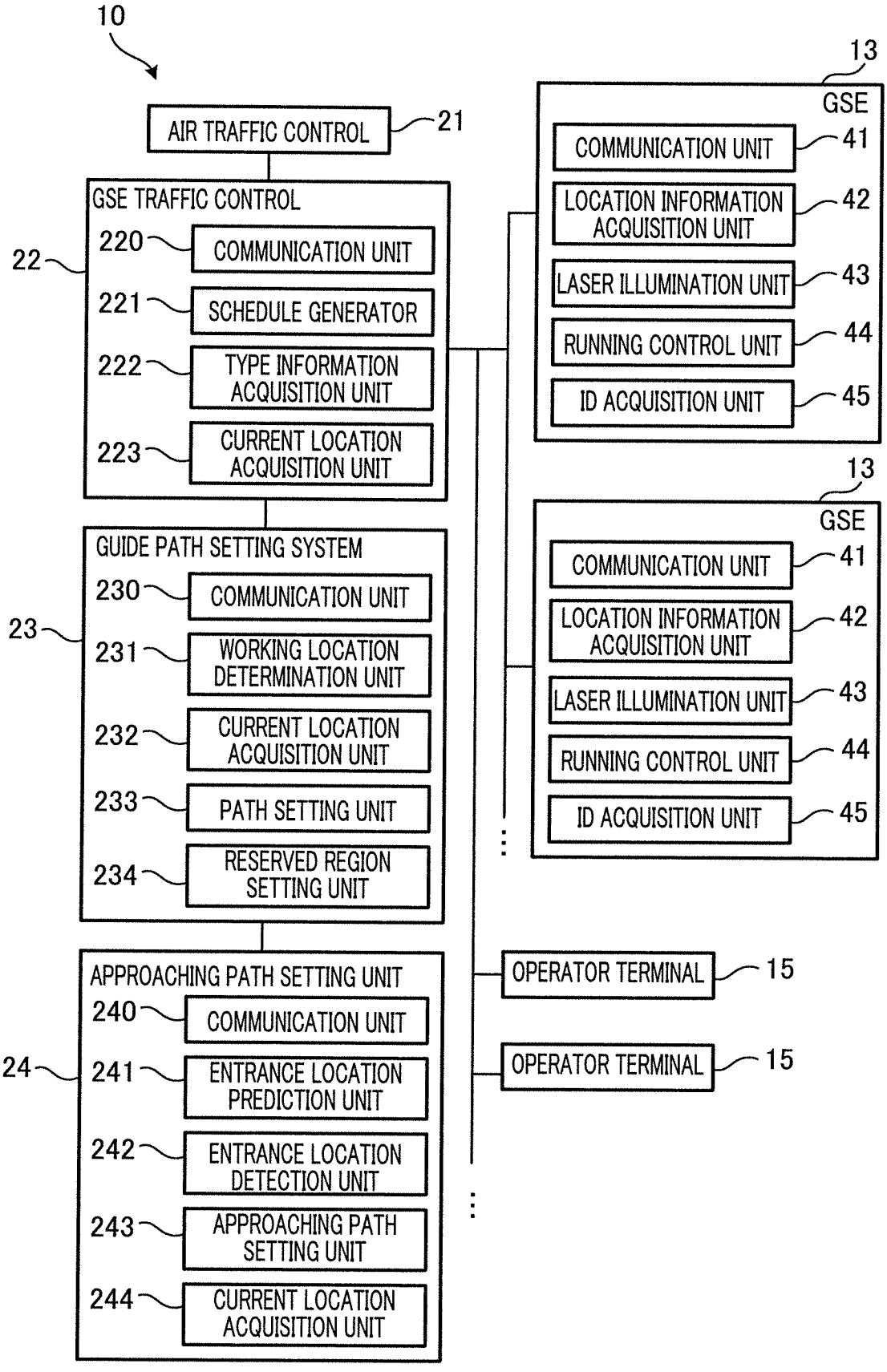
10
AIR TRAFFIC CONTROL
21
GSE TRAFFIC CONTROL
22
220
COMMUNICATION UNIT
221
SCHEDULE GENERATOR
222
TYPE INFORMATION ACQUISITION UNIT
223
CURRENT LOCATION ACQUISITION UNIT
GUIDE PATH SETTING SYSTEM
23
230
COMMUNICATION UNIT
231
WORKING LOCATION DETERMINATION UNIT
232
CURRENT LOCATION ACQUISITION UNIT
233
PATH SETTING UNIT
234
RESERVED REGION SETTING UNIT
APPROACHING PATH SETTING UNIT
24
240
COMMUNICATION UNIT
241
ENTRANCE LOCATION PREDICTION UNIT
242
ENTRANCE LOCATION DETECTION UNIT
243
APPROACHING PATH SETTING UNIT
244
CURRENT LOCATION ACQUISITION UNIT
13
GSE
COMMUNICATION UNIT
41
LOCATION INFORMATION ACQUISITION UNIT
42
LASER ILLUMINATION UNIT
43
RUNNING CONTROL UNIT
44
ID ACQUISITION UNIT
45
13
GSE
COMMUNICATION UNIT
41
LOCATION INFORMATION ACQUISITION UNIT
42
LASER ILLUMINATION UNIT
43
RUNNING CONTROL UNIT
44
ID ACQUISITION UNIT
45
OPERATOR TERMINAL
15
OPERATOR TERMINAL
15

FIG.3

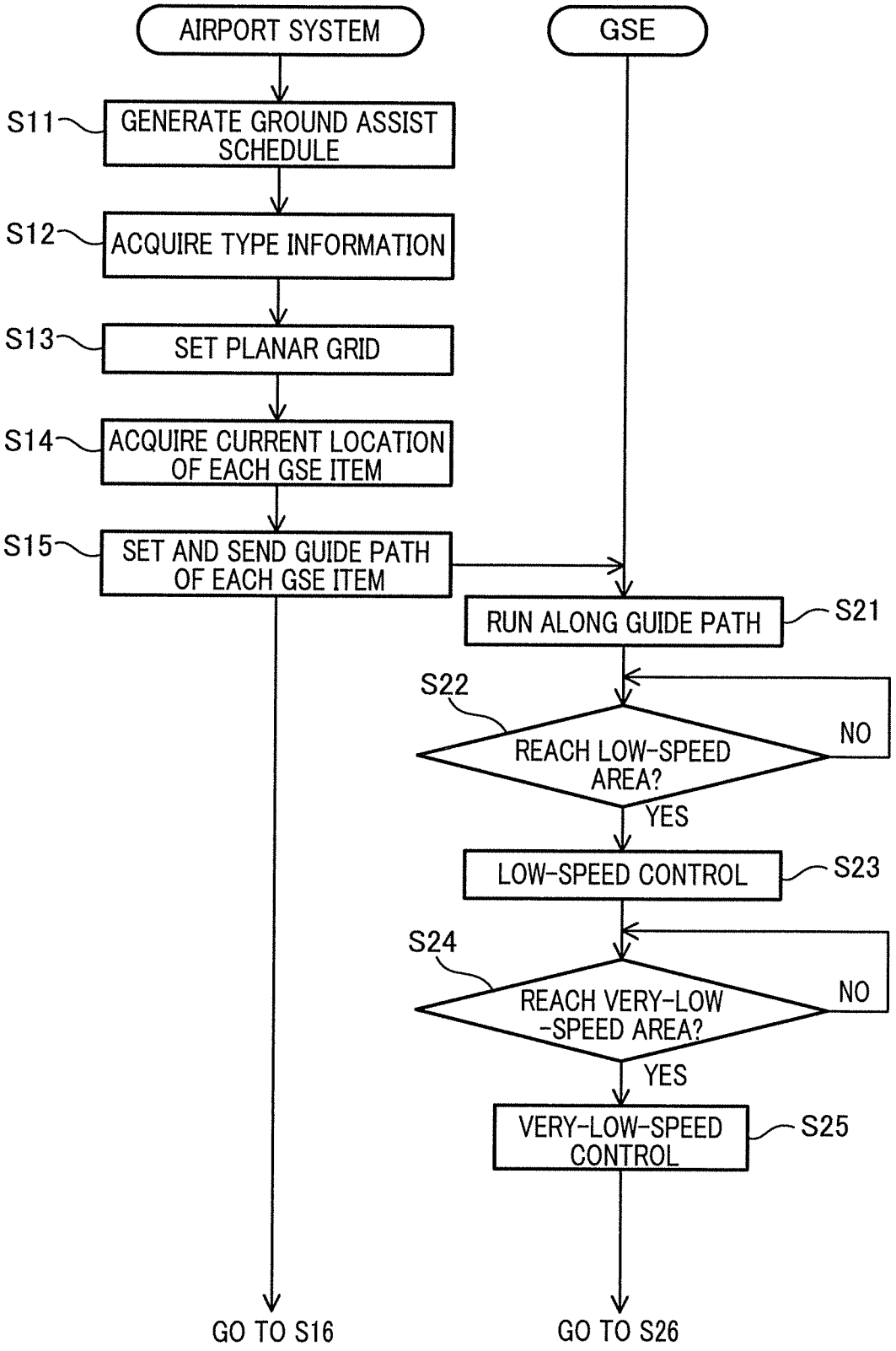
AIRPORT SYSTEM
GSE
S11
GENERATE GROUND ASSIST SCHEDULE
S12
ACQUIRE TYPE INFORMATION
S13
SET PLANAR GRID
S14
ACQUIRE CURRENT LOCATION OF EACH GSE ITEM
S15
SET AND SEND GUIDE PATH OF EACH GSE ITEM
RUN ALONG GUIDE PATH
S21
S22
REACH LOW-SPEED AREA?
NO
YES
LOW-SPEED CONTROL
S23
S24
REACH VERY-LOW -SPEED AREA?
NO
YES
VERY-LOW-SPEED CONTROL
S25
GO TO S16
GO TO S26

FIG.4

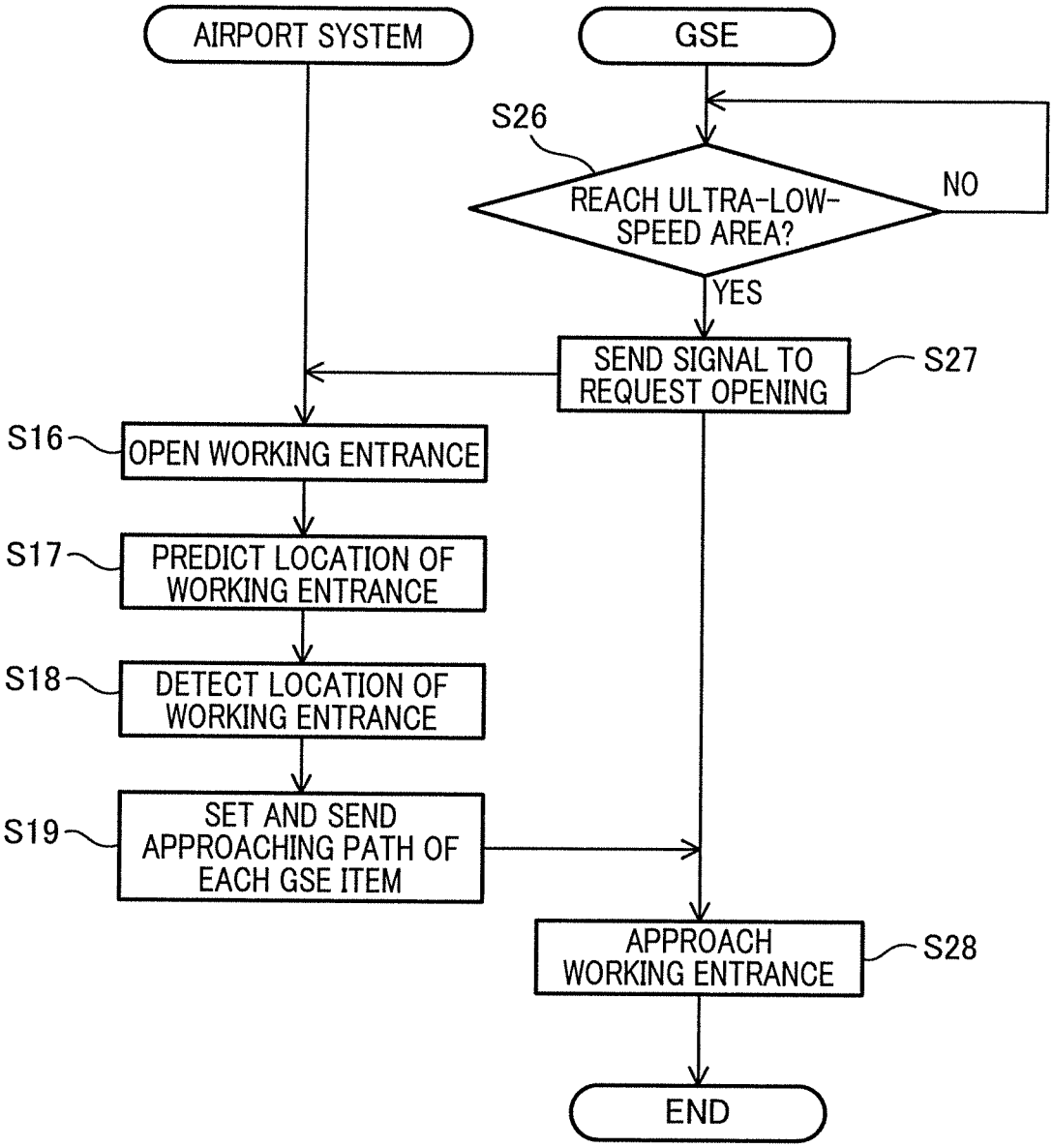
AIRPORT SYSTEM
GSE
S26
REACH ULTRA-LOW-SPEED AREA?
NO
YES
SEND SIGNAL TO REQUEST OPENING
S27
S16
OPEN WORKING ENTRANCE
S17
PREDICT LOCATION OF WORKING ENTRANCE
S18
DETECT LOCATION OF WORKING ENTRANCE
S19
SET AND SEND APPROACHING PATH OF EACH GSE ITEM
APPROACH WORKING ENTRANCE
S28
END

FIG.5

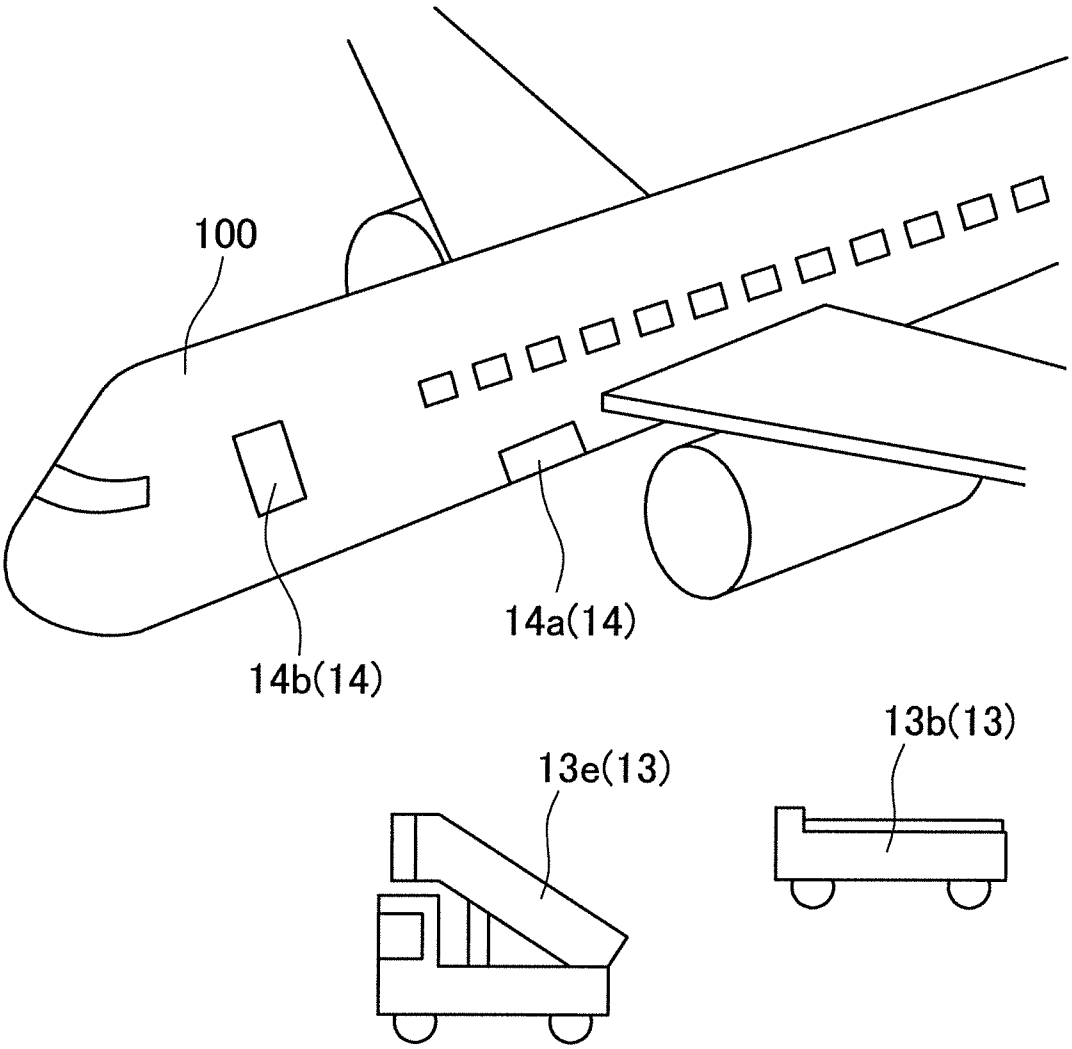

FIG.6

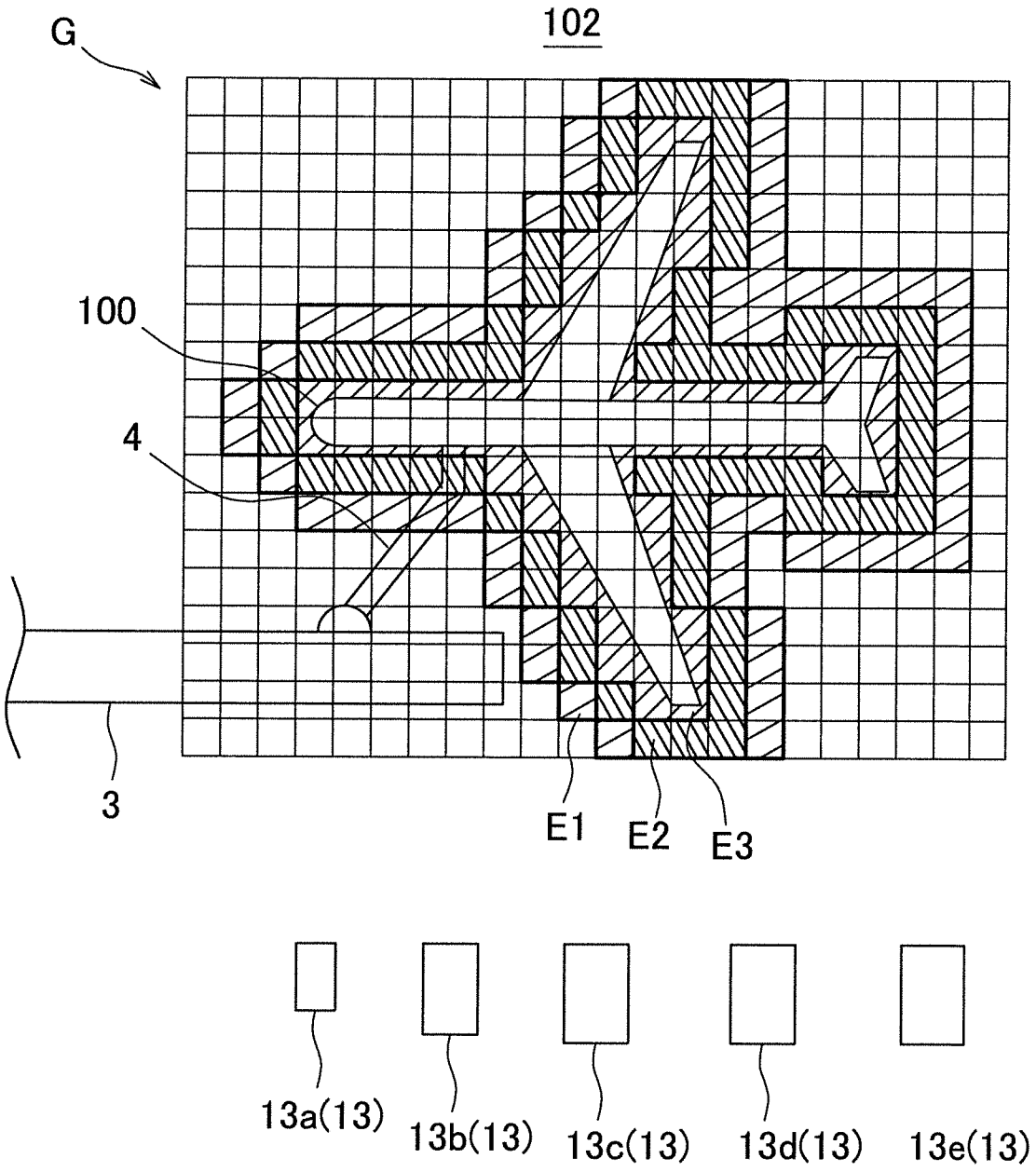

FIG.7

(a)

FLIGHT NUMBER	LANDING TIME	TAKE OFF TIME	LANDING RUNWAY	TAKE OFF RUNWAY	GATE NUMBER	GOODS	NUMBER OF PASSENGERS	TYPE
1	9:00	9:45	A	C	1	LIST1	70	777
2	9:15	10:30	C	A	3	LIST2	120	787
3	10:00	10:45	B	B	1	LIST3	60	737
...	...	...	...	...	...	...	...	...
7	11:25	12:40	B	C	2	LIST7	40	CONCORDE
...	...	...	...	...	...	...	...	...

(b)

CONTAINER NUMBER	TYPE
1	LARGE CONTAINER
2	POSTAL CONTAINER
3	MIDDLE-SIZED CONTAINER
...	...

FIG.8

(a)

OPERATOR ID	NAME	GENDER	CAPABILITIES	DRIVABLE VEHICLES	WORK SITUATION
001	SATO	MALE	PUSH BACK CARRYING IN AND OUT CARGO	TOW TRACTOR HIGH-LIFT LOADER	PRESENT
010	SUZUKI	FEMALE	CARRYING IN AND OUT PASSENGER LUGGAGE PS ATTACHMENT	BELT LOADER PASSENGER STEP	PAID VACATION
011	TANAKA	MALE	CARRYING IN AND OUT CARGO CARGO TOWING	HIGH-LIFT LOADER TOW TRACTOR	LEFT EARLY
...	...	...	...	...	...
111	SHIMIZU	MALE	AIRPLANE GUIDANCE	TOW TRACTOR	PRESENT

(b)

GSE ID	VEHICLE TYPES	SUPPORTED TYPES	AUXILIARIES	OPERATION STATES	WAITING PLACE
HL-01	HIGH-LIFT LOADER	777	NONE	NORMAL	PARKING A
HL-02	HIGH-LIFT LOADER	737	NONE	NORMAL	PARKING A
BL-01	BELT LOADER	CONCORDE	ASSISTING DEVICE	IN MAINTENANCE	MAINTENANCE FACTORY C
...	...	...	...	...	...
TT-03	TOW TRACTOR	777	NONE	NORMAL	PARKING B

FIG.9

FLIGHT NUMBER	LANDING TIME	TAKE OFF TIME	LANDING RUNWAY	TAKE OFF RUNWAY	GATE NUMBER	TYPE	OPERATOR IN CHARGE	OPERATION CONTENT	GSE	NOTES
1	9:00	9:45	A	C	1	777	001	CARRYING OUT CARGO	HL-01	
1	9:00	9:45	A	C	1	777	100	PS ATTACHMENT	PS-03	STANDBY IN AREA A
2	9:15	10:30	C	A	3	787	111	AIRPLANE GUIDANCE	TT-01	
...	...	...	...	...	...	...	...	...	...	...
4	10:20	11:00	B	A	4	737	100	CARRYING IN HAND LUGGAGE	BL-02	
...	...	...	...	...	...	...	...	...	...	...

FIG.10

FLIGHT NUMBER	LANDING TIME	TAKE OFF TIME	LANDING RUNWAY	TAKE OFF RUNWAY	GATE NUMBER	TYPE	OPERATION CONTENT	GSE
1	9:00	9:45	A	C	1	777	CARRYING OUT CARGO	HL-01
3	10:00	10:45	B	B	1	737	PUSH BACK	TT-01
4	10:20	11:00	B	A	4	737	CARRYING OUT CARGO	HL-02
...	...	...	...	...	...	...	...	...
8	11:30	12:45	C	C	2	777	CARRYING IN CARGO	HL-01
...	...	...	...	...	...	...	...	...

FIG.11

FLIGHT NUMBER	LANDING TIME	TAKE OFF TIME	LANDING RUNWAY	TAKE OFF RUNWAY	GATE NUMBER	OPERATOR
1	9:00	9:45	A	C	1	001
3	10:00	10:45	B	B	1	011
4	10:20	11:00	B	A	4	100
...	...	...	...	...	...	...
8	11:30	12:45	C	C	2	001
...	...	...	...	...	...	...

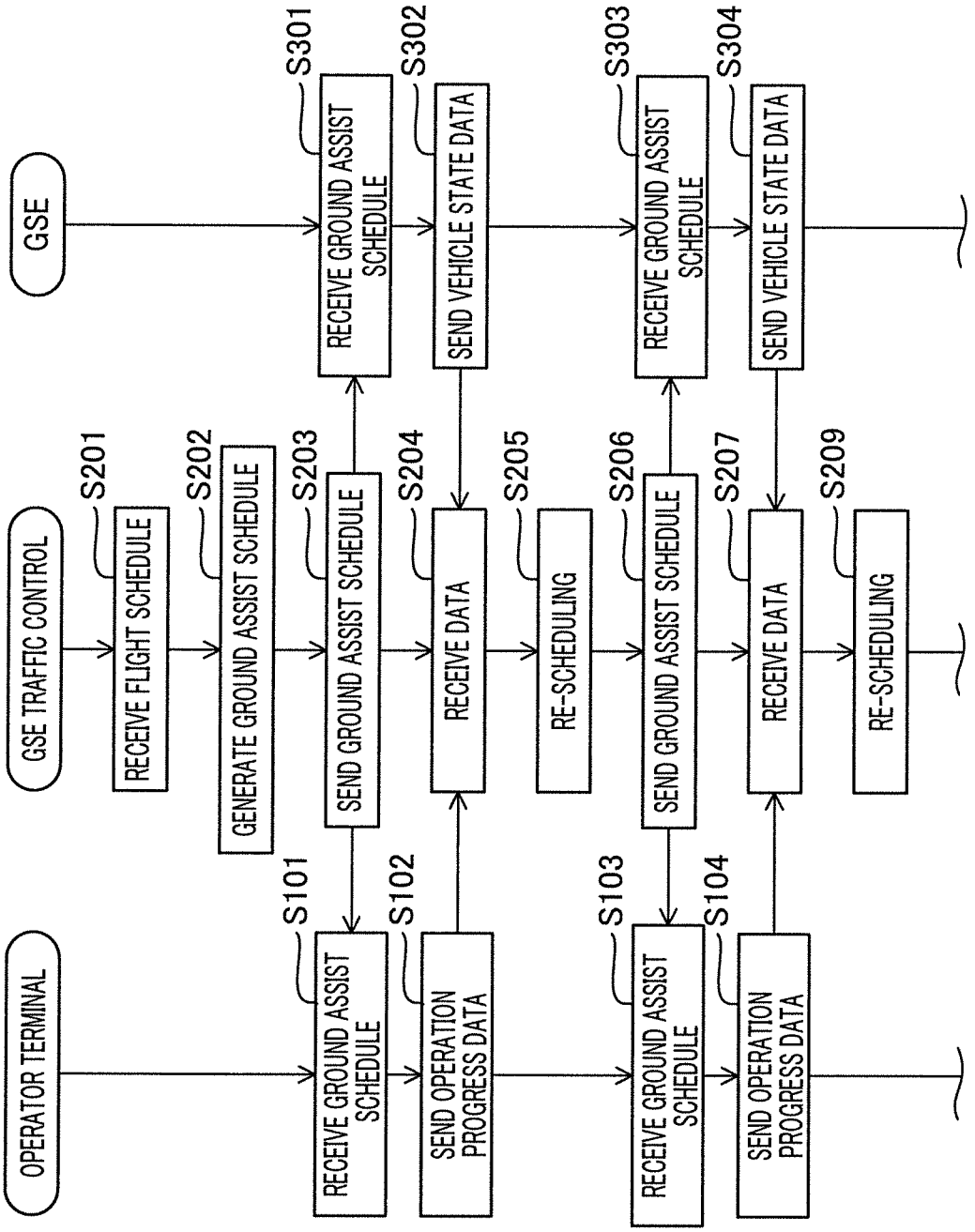
OPERATOR TERMINAL
GSE TRAFFIC CONTROL
GSE
RECEIVE FLIGHT SCHEDULE
S201
GENERATE GROUND ASSIST SCHEDULE
S202
SEND GROUND ASSIST SCHEDULE
S203
RECEIVE DATA
S204
RE-SCHEDULING
S205
SEND GROUND ASSIST SCHEDULE
S206
RECEIVE DATA
S207
RE-SCHEDULING
S209
RECEIVE GROUND ASSIST SCHEDULE
S101
SEND OPERATION PROGRESS DATA
S102
RECEIVE GROUND ASSIST SCHEDULE
S103
SEND OPERATION PROGRESS DATA
S104
RECEIVE GROUND ASSIST SCHEDULE
S301
SEND VEHICLE STATE DATA
S302
RECEIVE GROUND ASSIST SCHEDULE
S303
SEND VEHICLE STATE DATA
S304

FIG.12

FIG.13

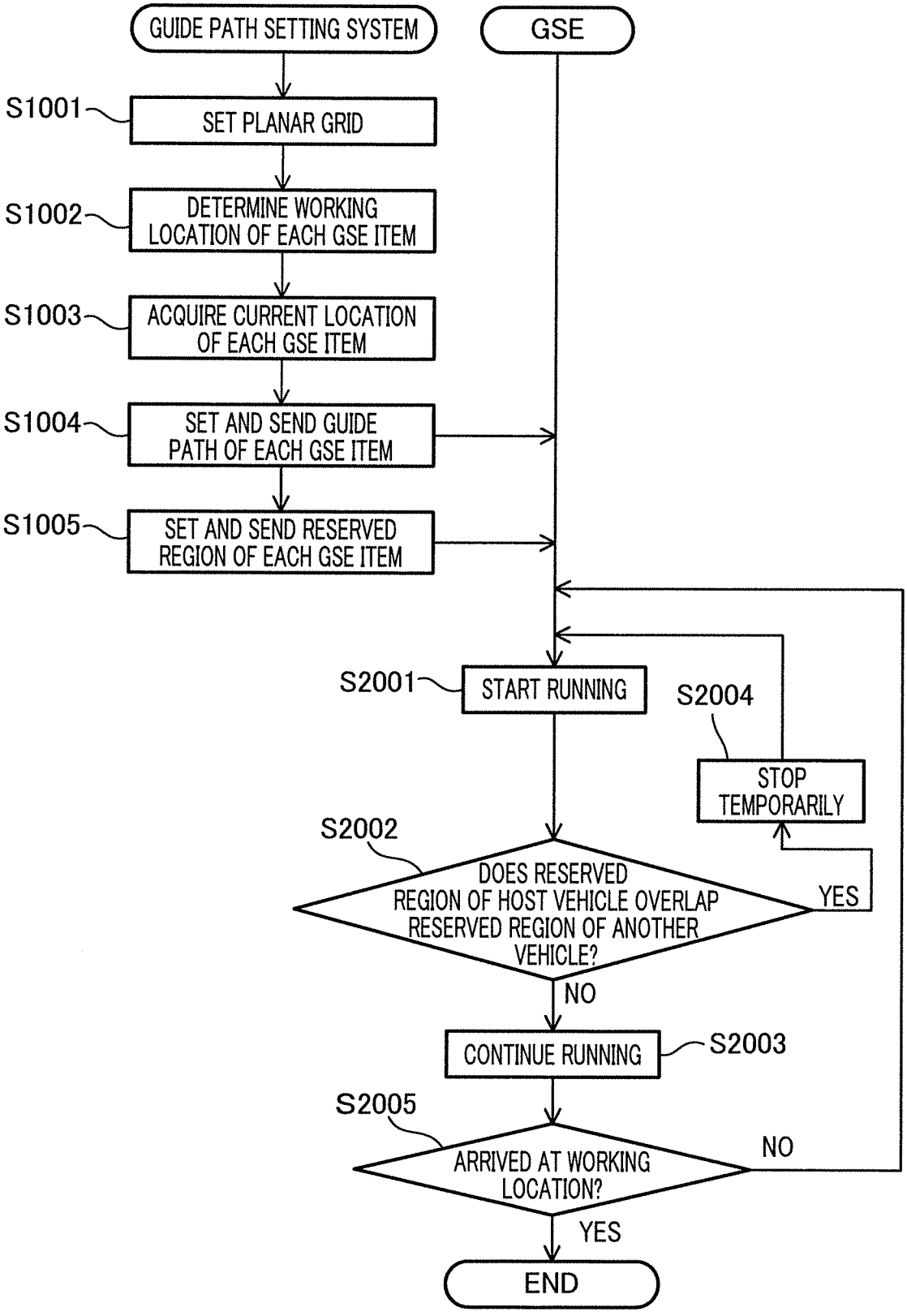
GUIDE PATH SETTING SYSTEM
GSE
S1001
SET PLANAR GRID
S1002
DETERMINE WORKING LOCATION OF EACH GSE ITEM
S1003
ACQUIRE CURRENT LOCATION OF EACH GSE ITEM
S1004
SET AND SEND GUIDE PATH OF EACH GSE ITEM
S1005
SET AND SEND RESERVED REGION OF EACH GSE ITEM
S2001
START RUNNING
S2004
STOP TEMPORARILY
S2002
DOES RESERVED REGION OF HOST VEHICLE OVERLAP RESERVED REGION OF ANOTHER VEHICLE?
YES
NO
CONTINUE RUNNING
S2003
S2005
ARRIVED AT WORKING LOCATION?
NO
YES
END

FIG.14

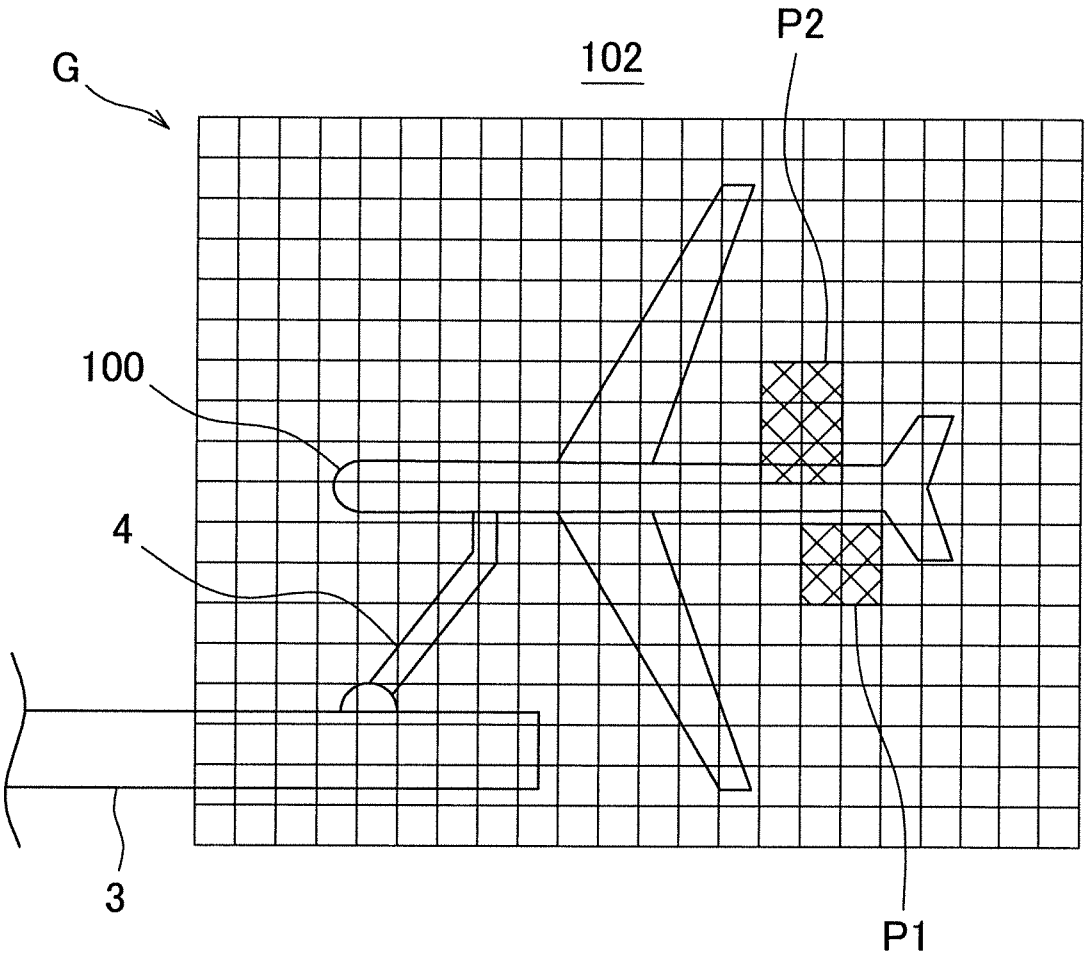

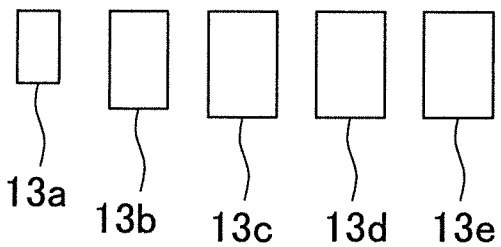

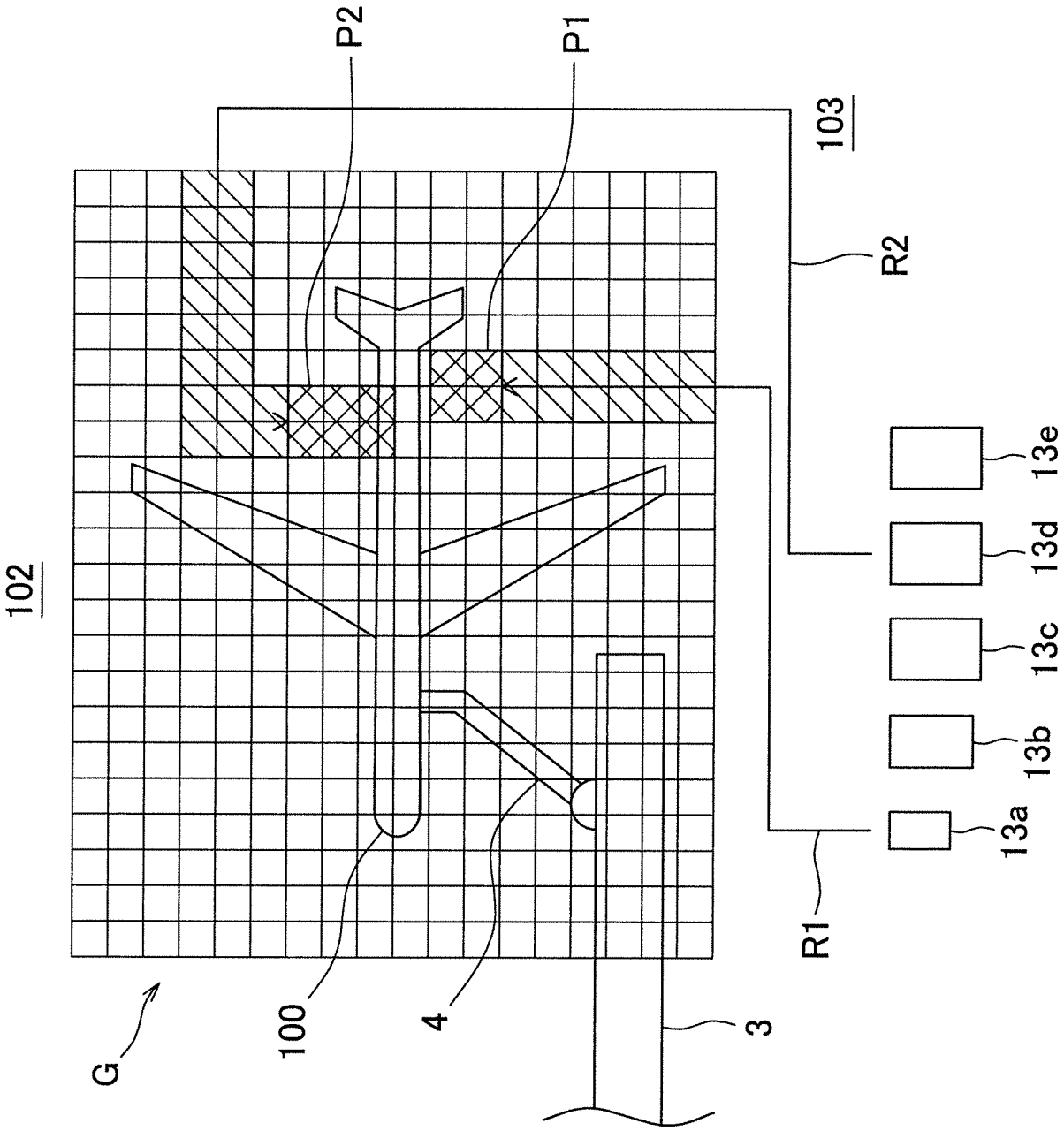

FIG.15

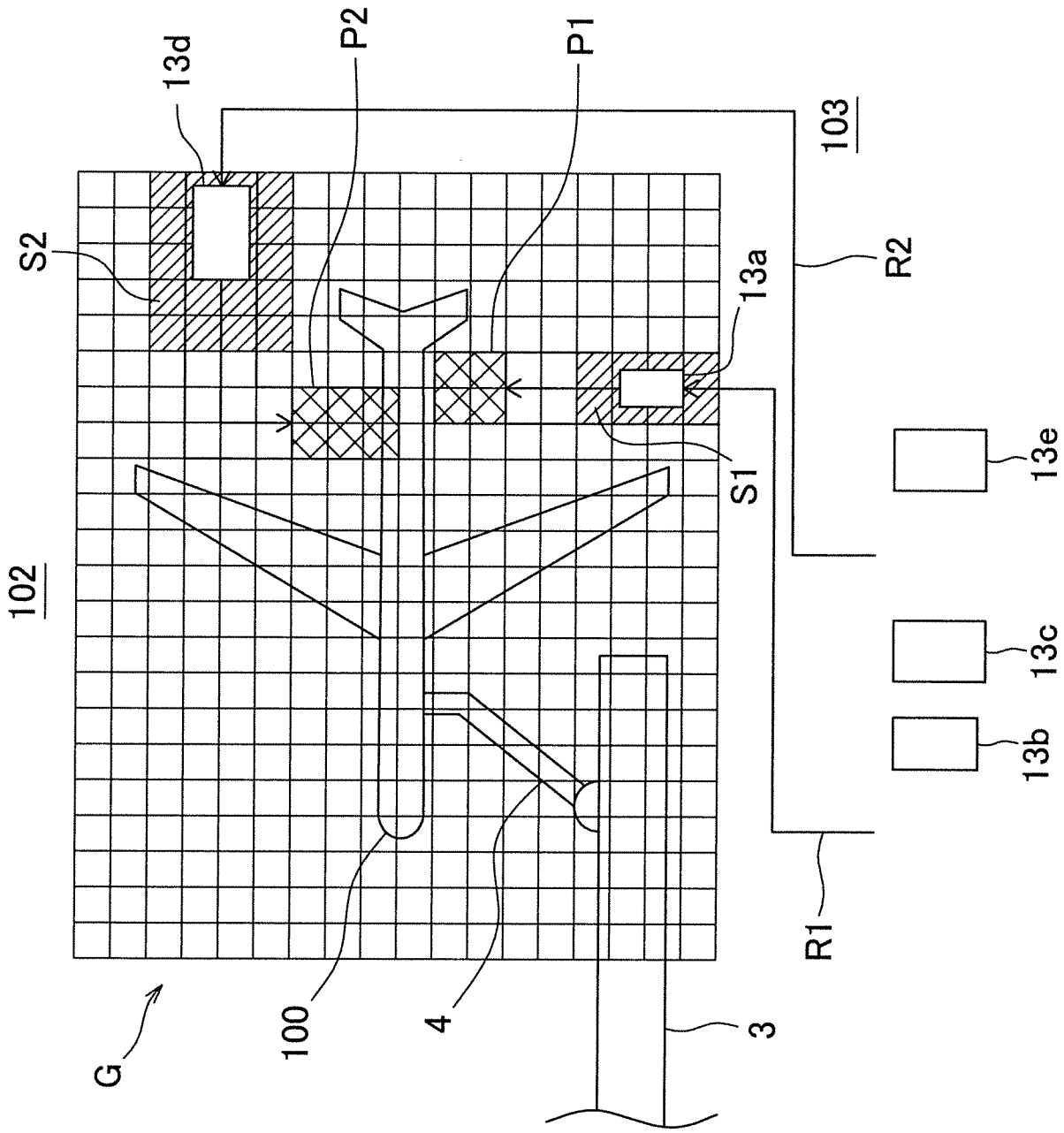

FIG.16

FIG.17

