FIG. 1

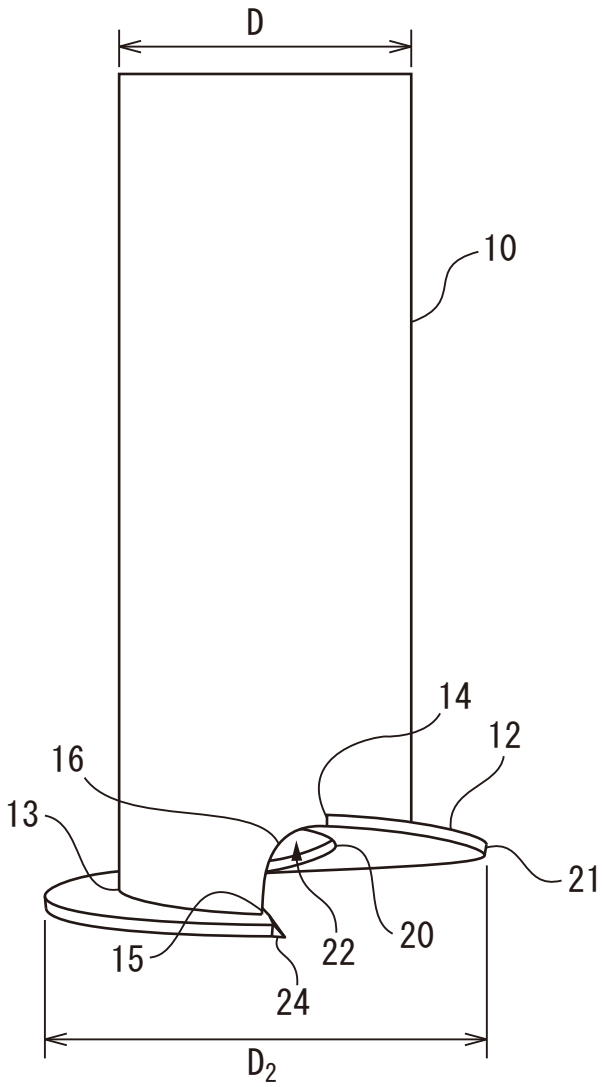

FIG. 2

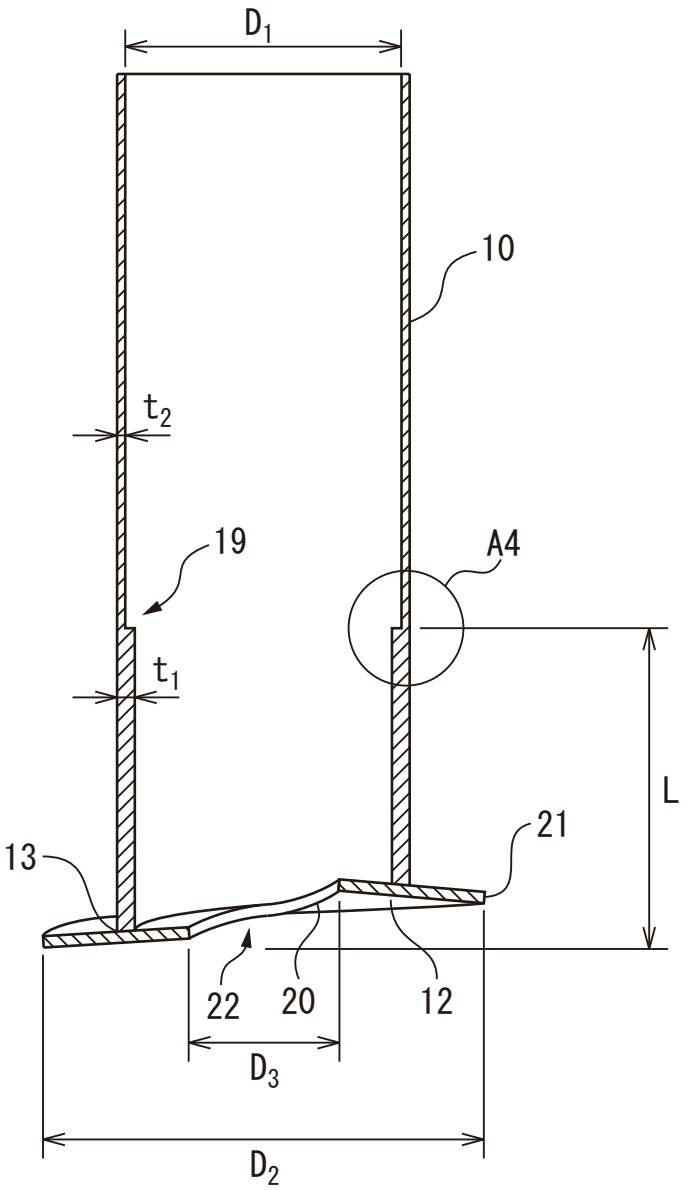

FIG. 3

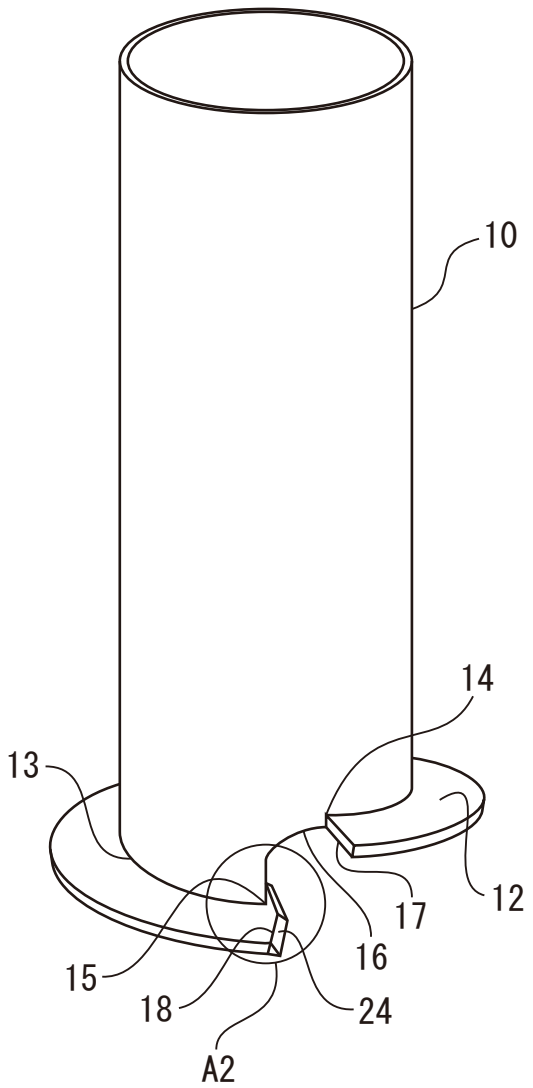

FIG. 4

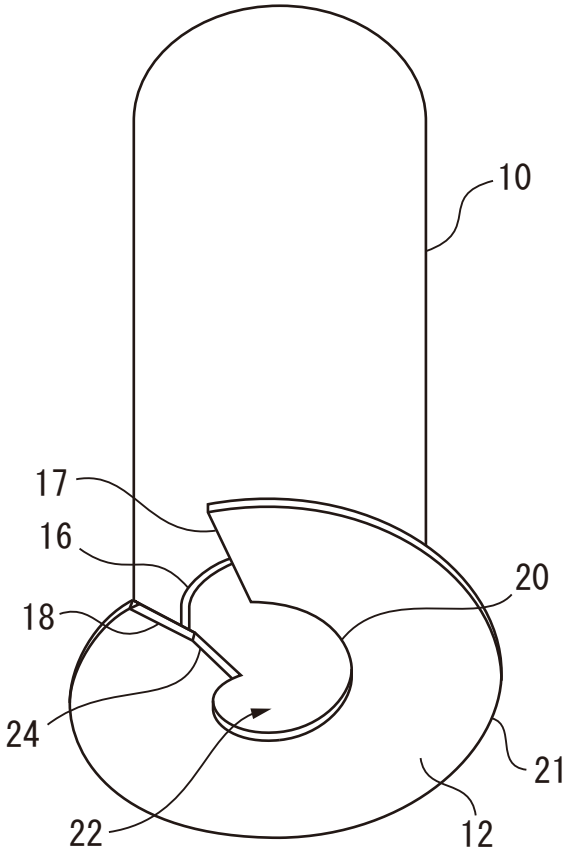

FIG. 5

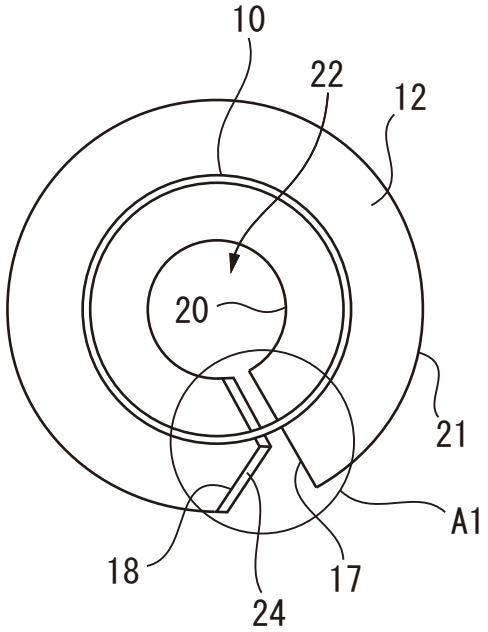

FIG. 6A

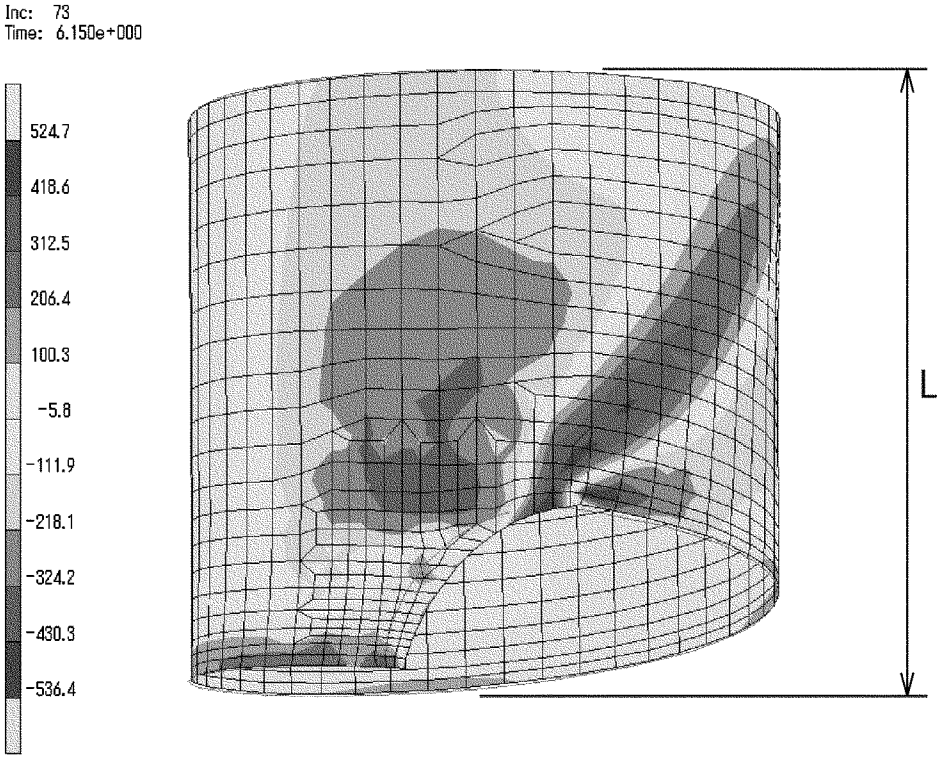
Inc: 73
Time: 6.150e+000
524.7
418.6
312.5
206.4
100.3
-5.8
-111.9
-218.1
-324.2
-430.3
-536.4
L

FIG. 6B

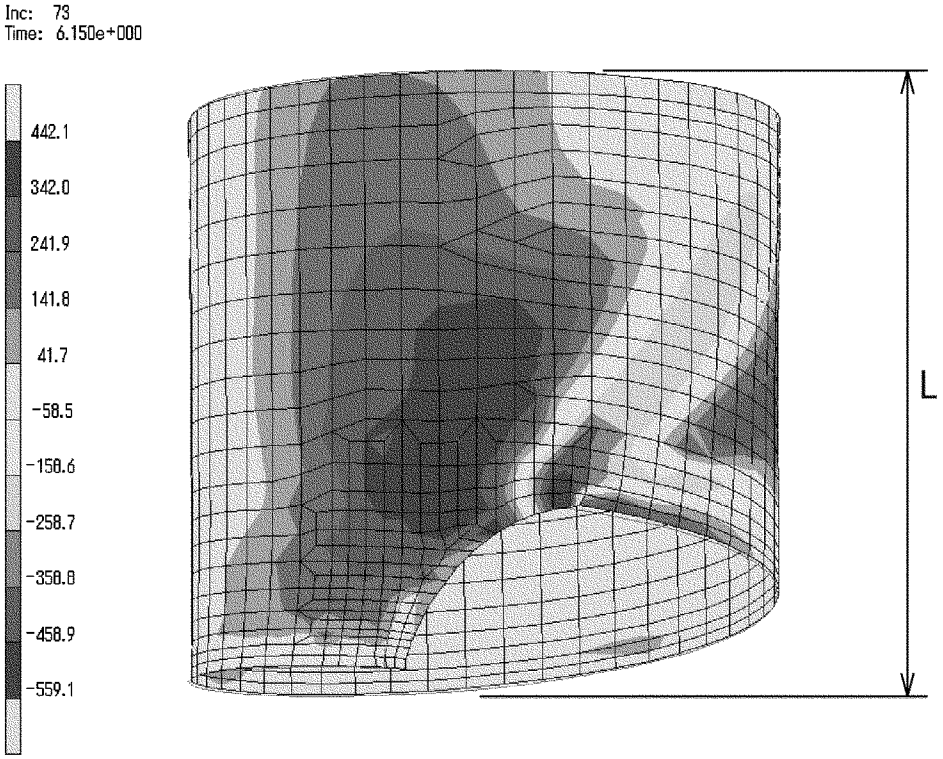
Inc: 73
Time: 6.150e+000
442.1
342.0
241.9
141.8
41.7
-58.5
-158.6
-258.7
-358.8
-458.9
-559.1
L

FIG. 6C

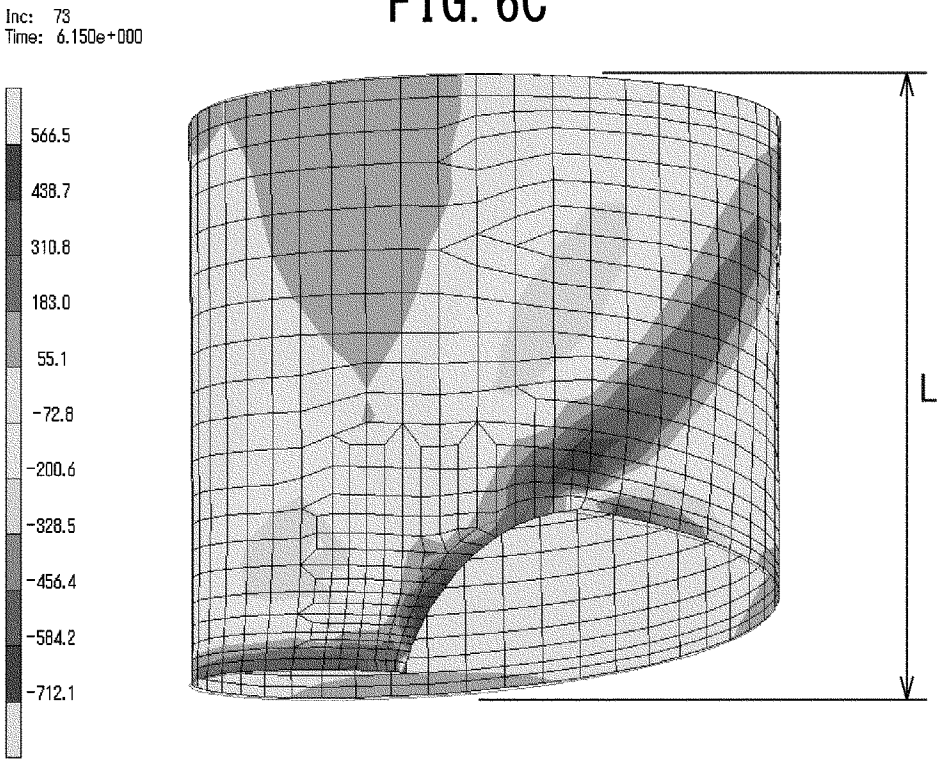
Inc: 73
Time: 6.150e+000
566.5
438.7
310.8
183.0
55.1
-72.8
-200.6
-328.5
-456.4
-584.2
-712.1
L

FIG. 6D

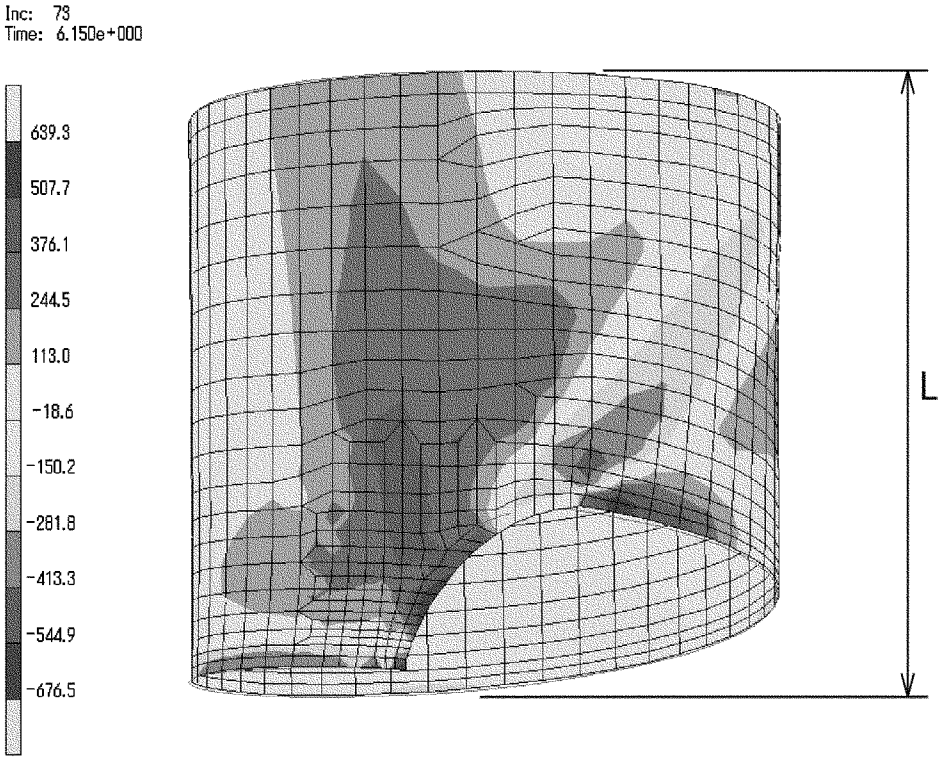
Inc: 73
Time: 6.150e+000
639.3
507.7
376.1
244.5
113.0
-18.6
-150.2
-281.8
-413.3
-544.9
-676.5
L

FIG. 7

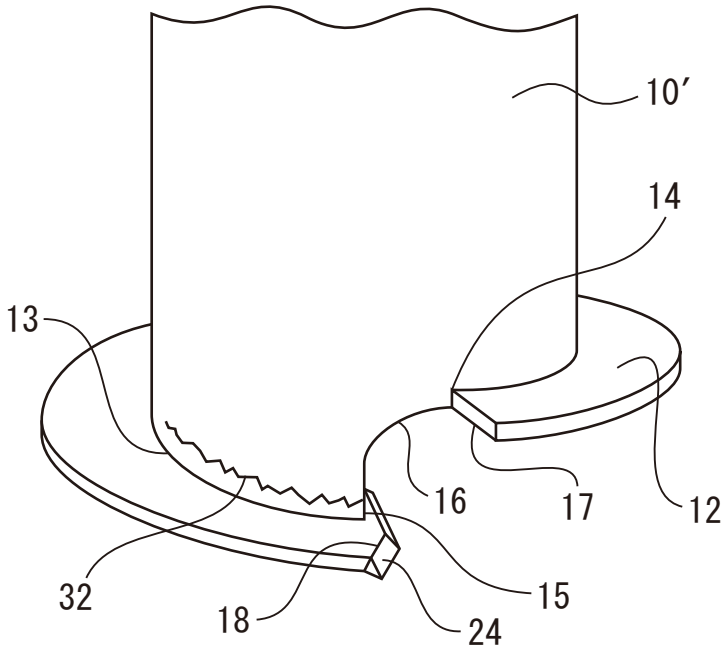

FIG. 8

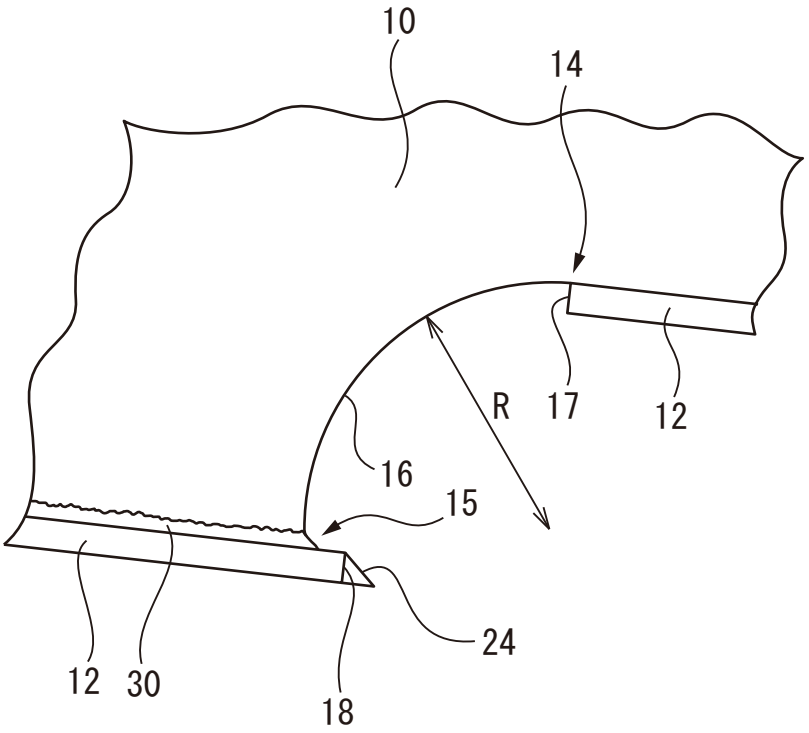

FIG. 9

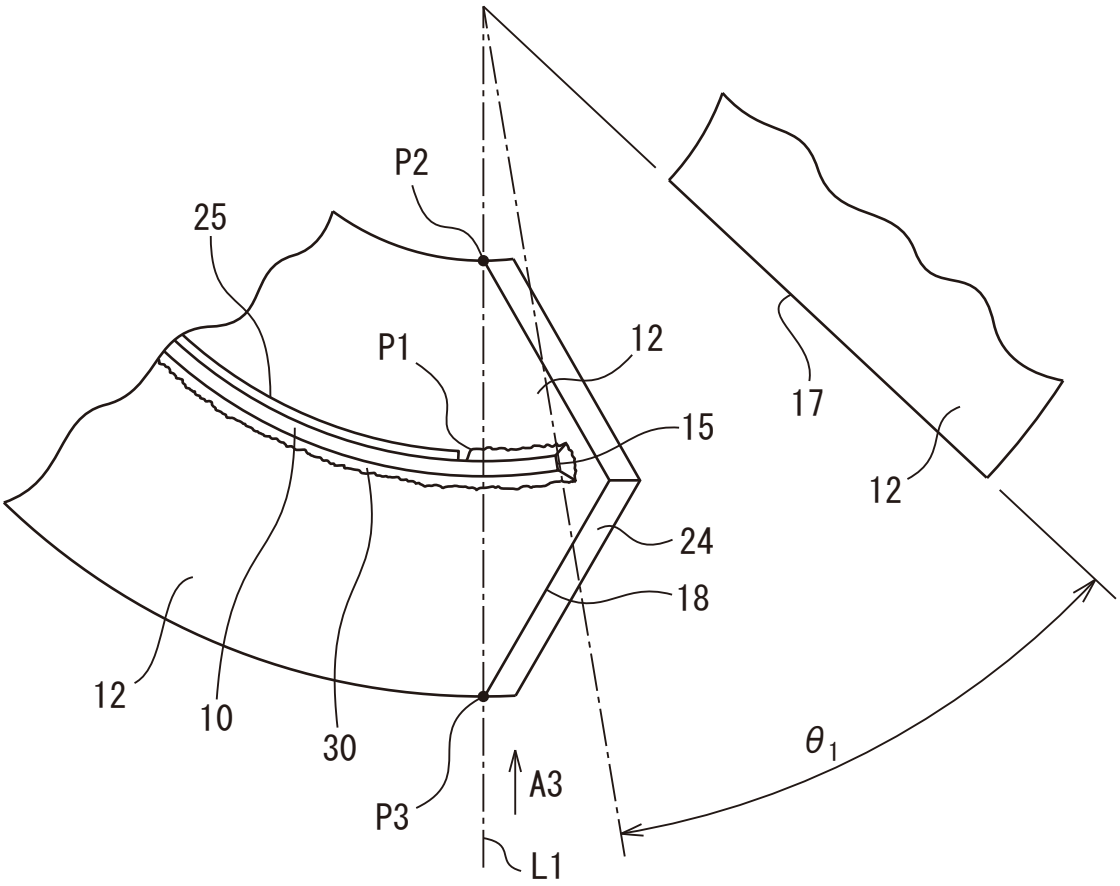

FIG. 10

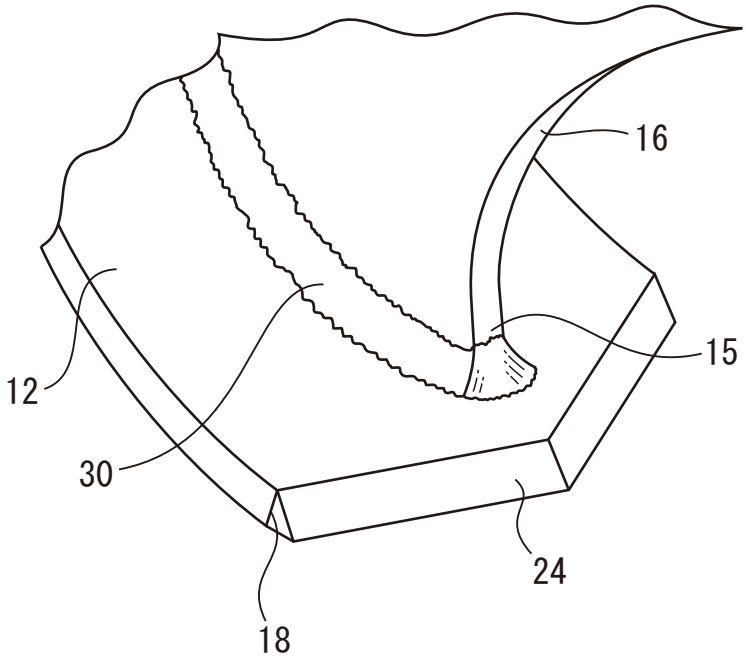

FIG. 11

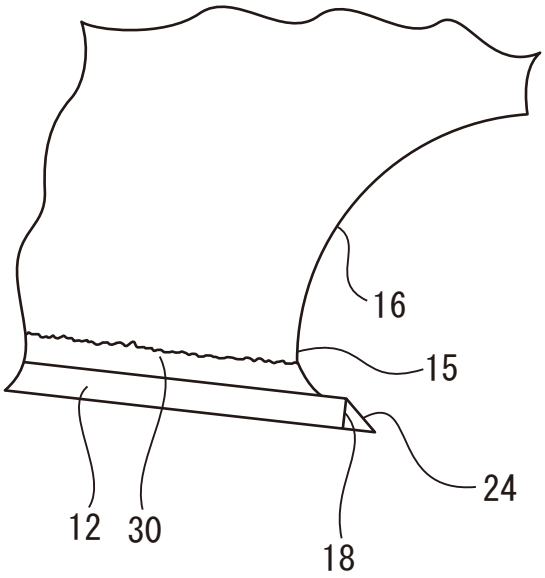

FIG. 12

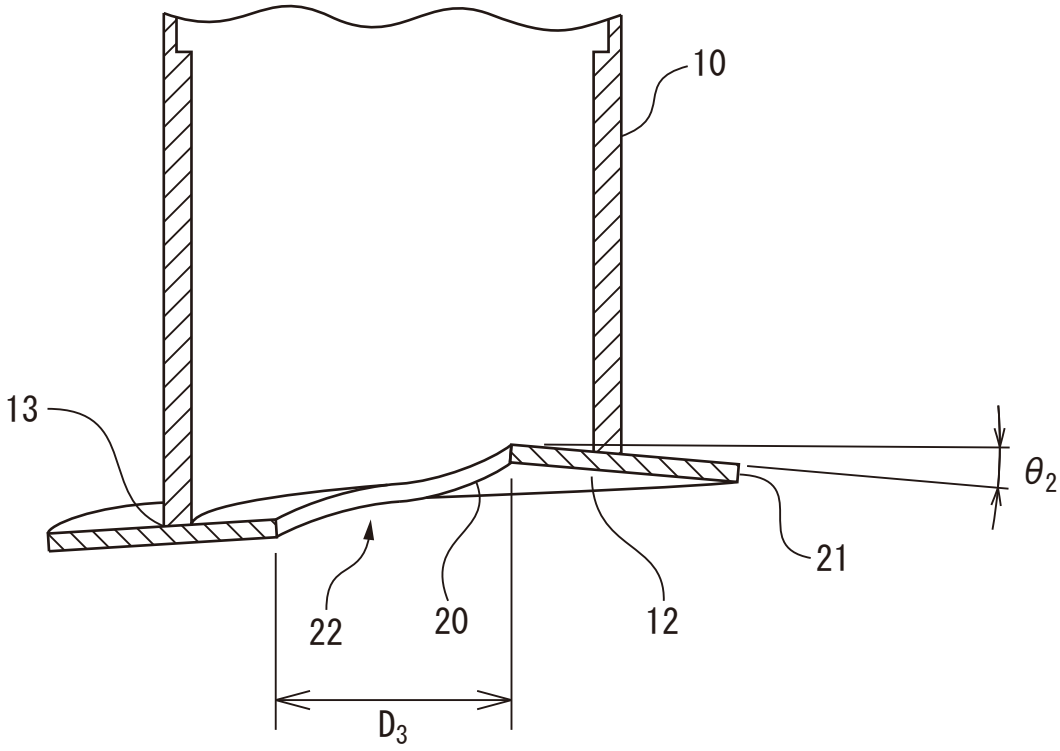

FIG. 13

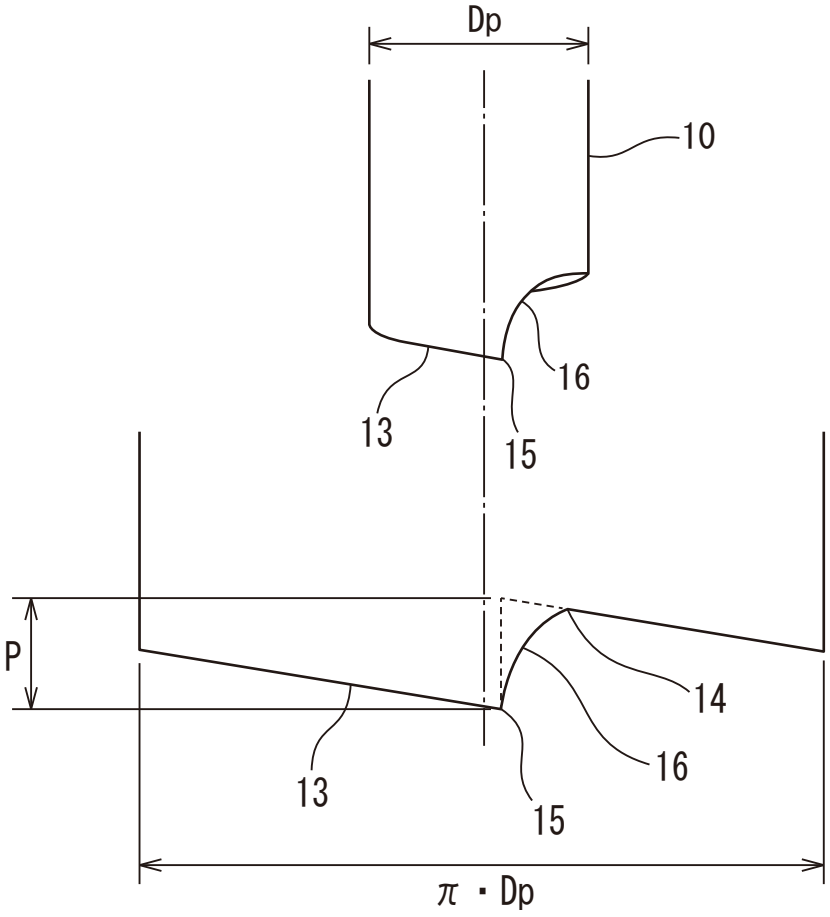

FIG. 14

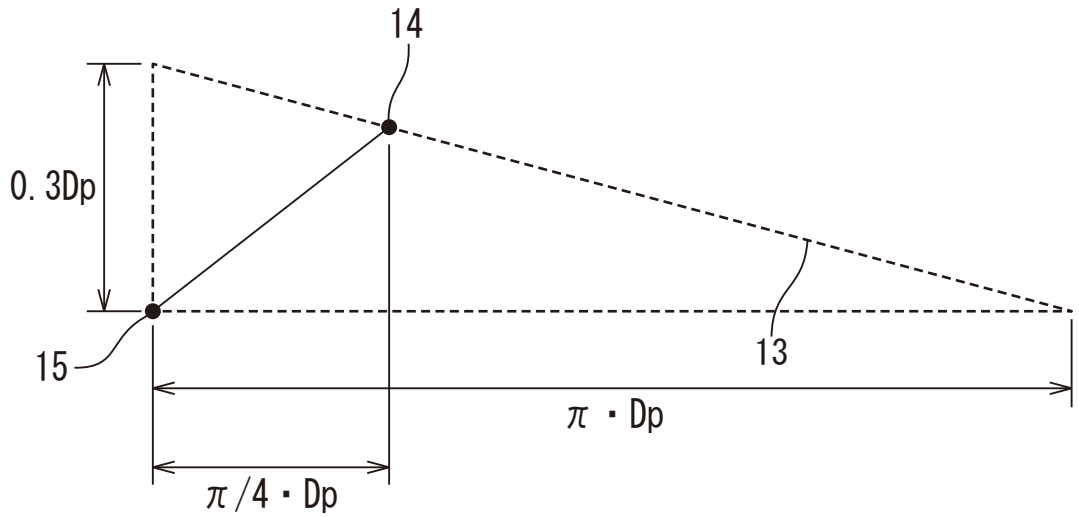

FIG. 15

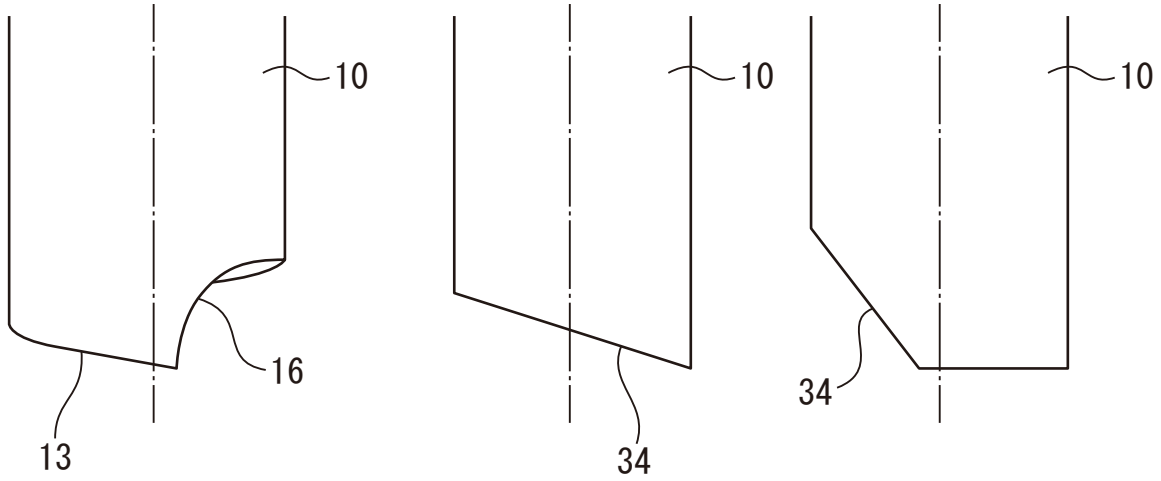

FIG. 16

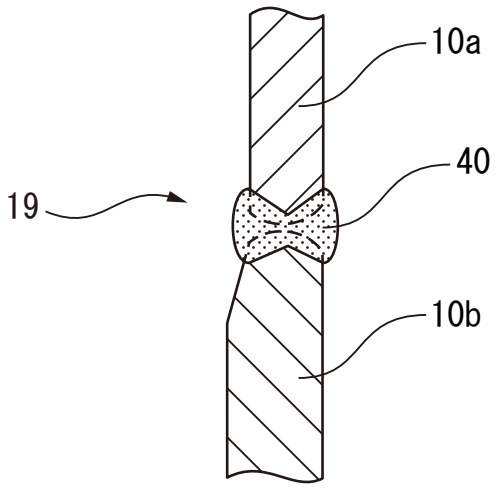
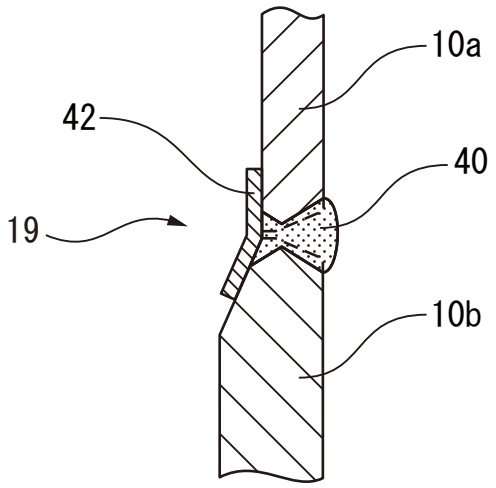
FIG. 17