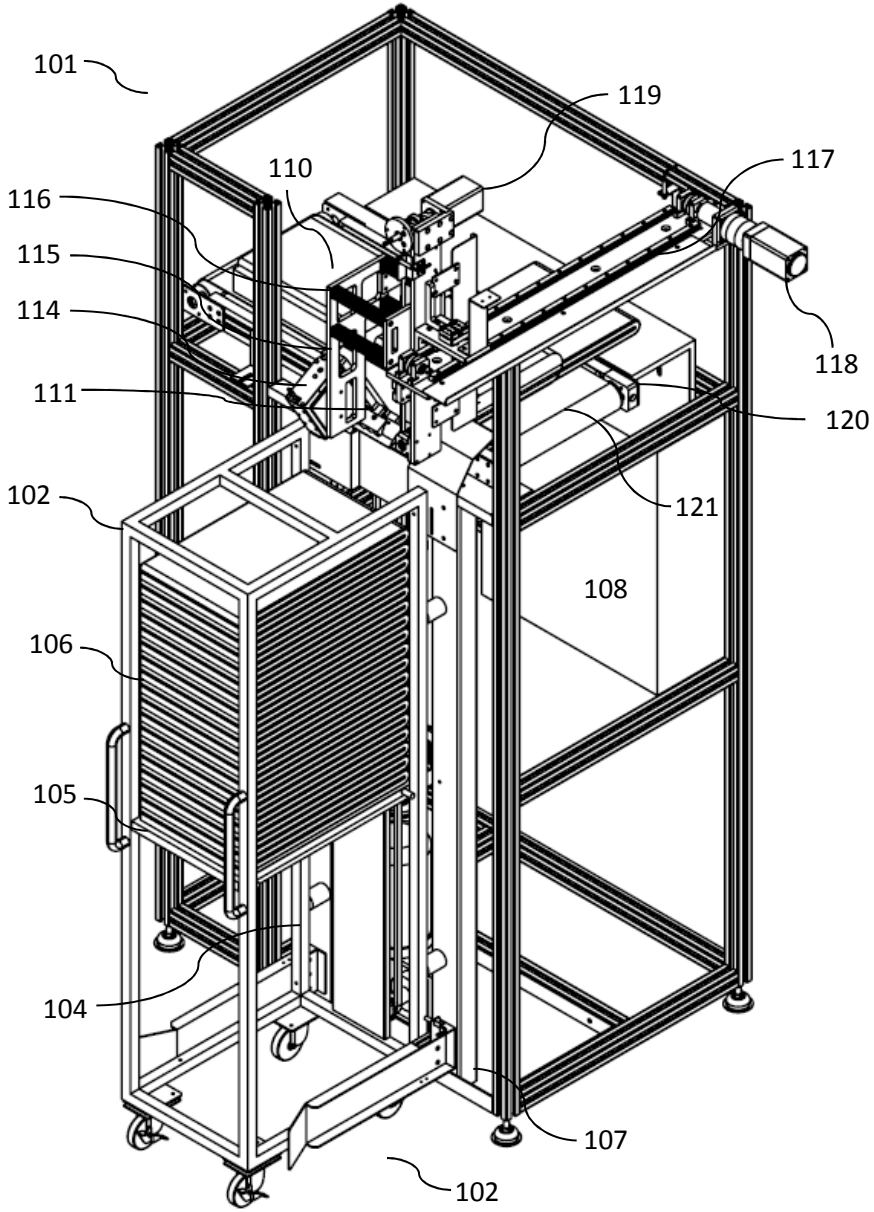
101
119
110
117
116
115
114
118
111
120
102
121
108
106
105
104
107
102

FIG. 1

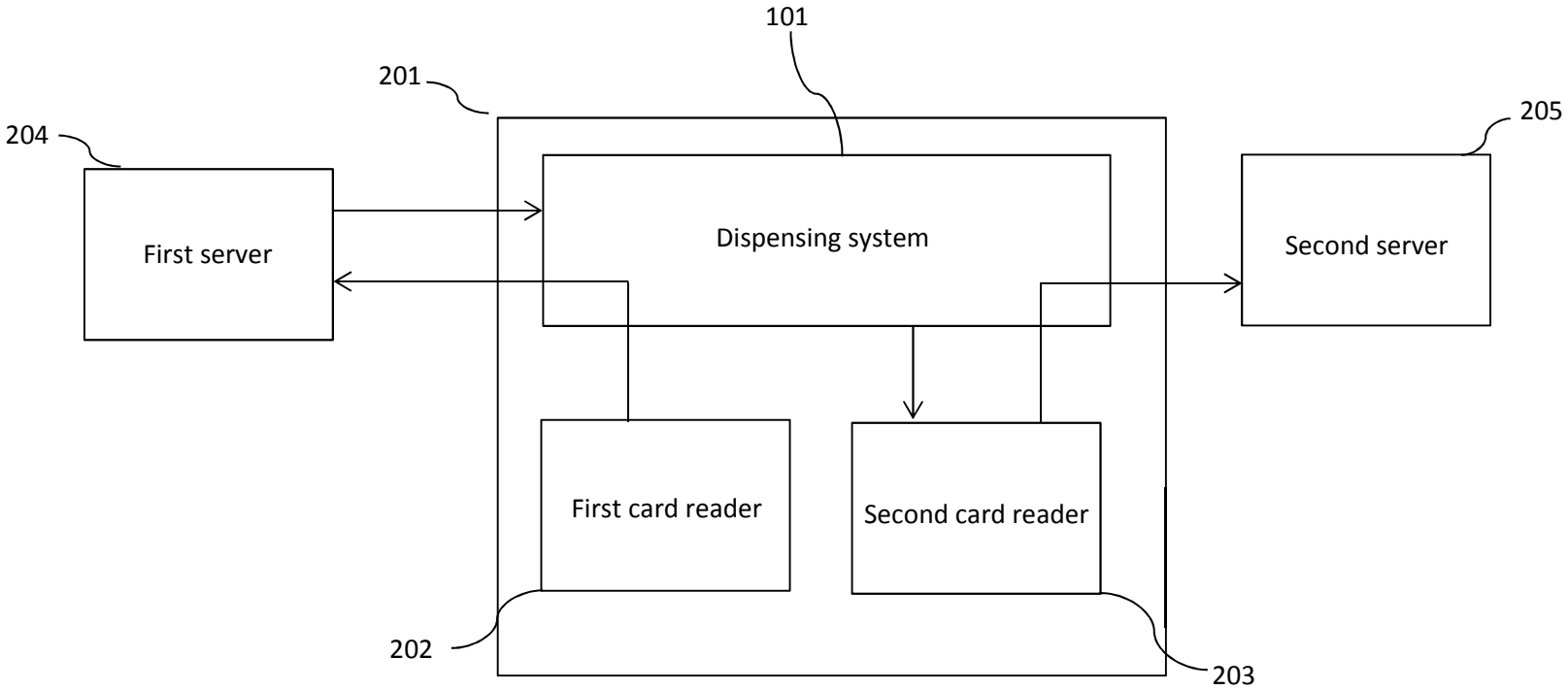
101
201
204
205
First server
Dispensing system
Second server
First card reader
Second card reader
202
203

FIG. 2

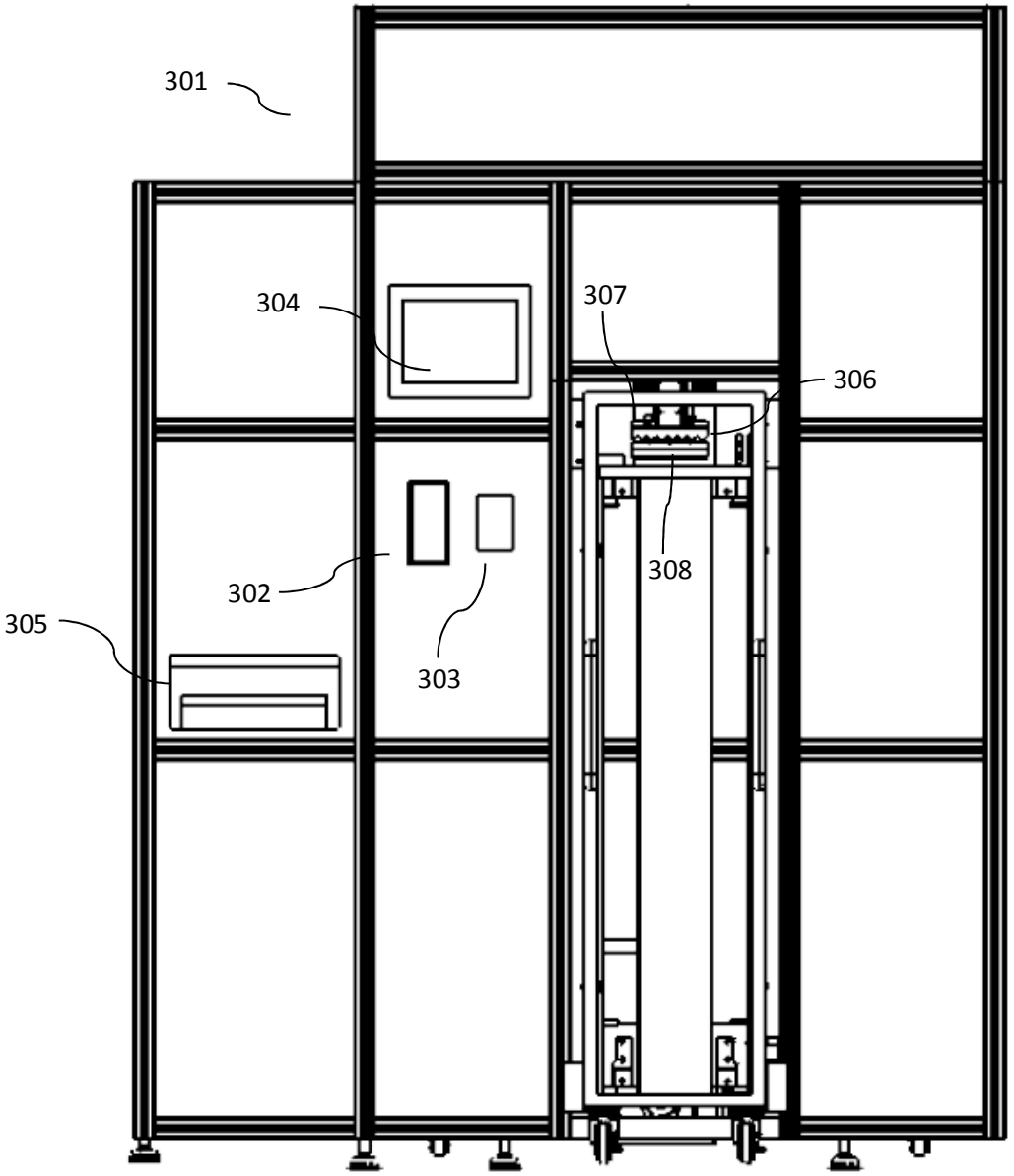

FIG. 3

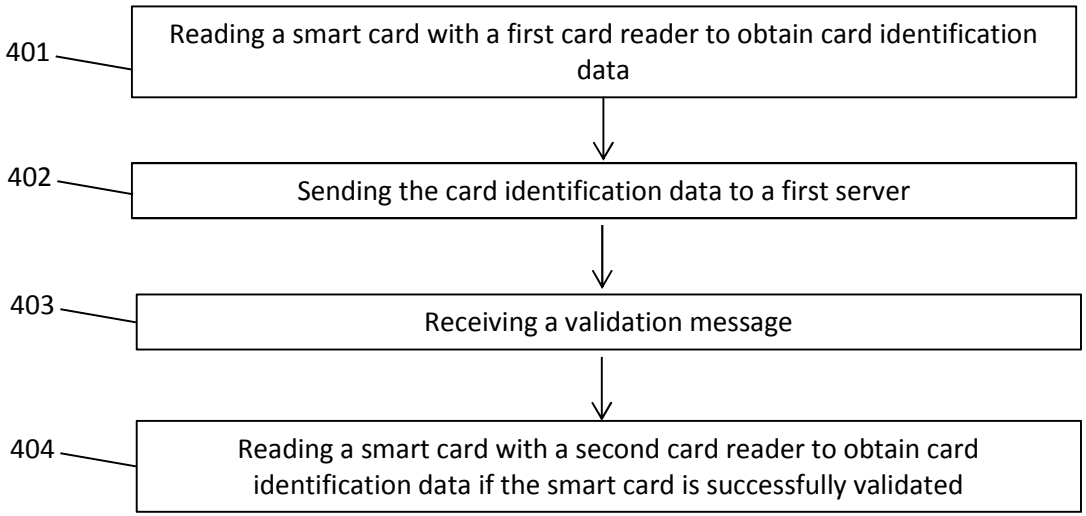
401
Reading a smart card with a first card reader to obtain card identification data
402
Sending the card identification data to a first server
403
Receiving a validation message
404
Reading a smart card with a second card reader to obtain card identification data if the smart card is successfully validated

FIG. 4