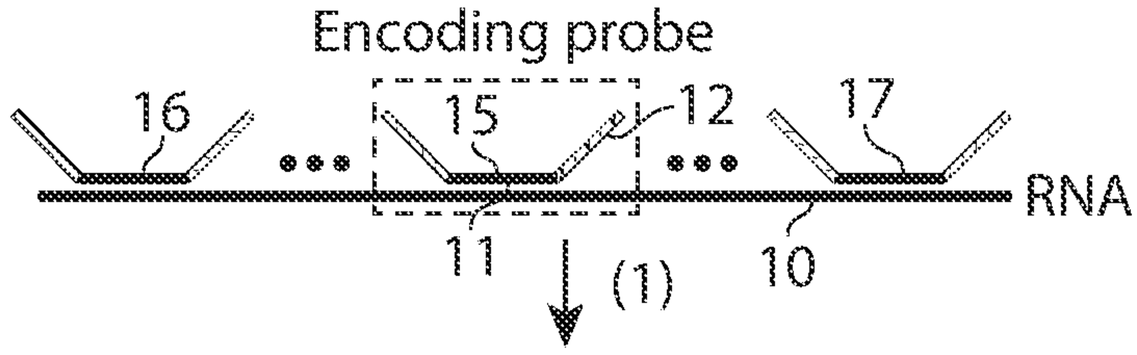
Encoding probe
16
15
12
17
RNA
11
(1)
10

FIG. 1A

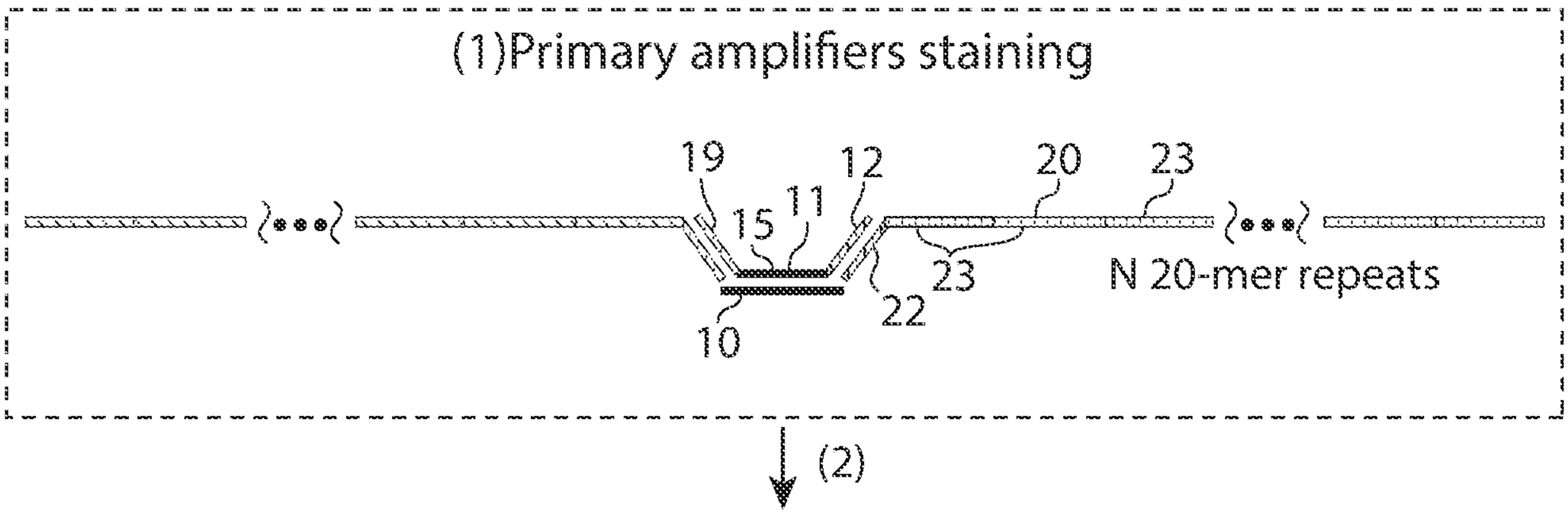
(1)Primary amplifiers staining
19
12
20
23
15
11
23
N 20-mer repeats
22
10
(2)

FIG. 1B

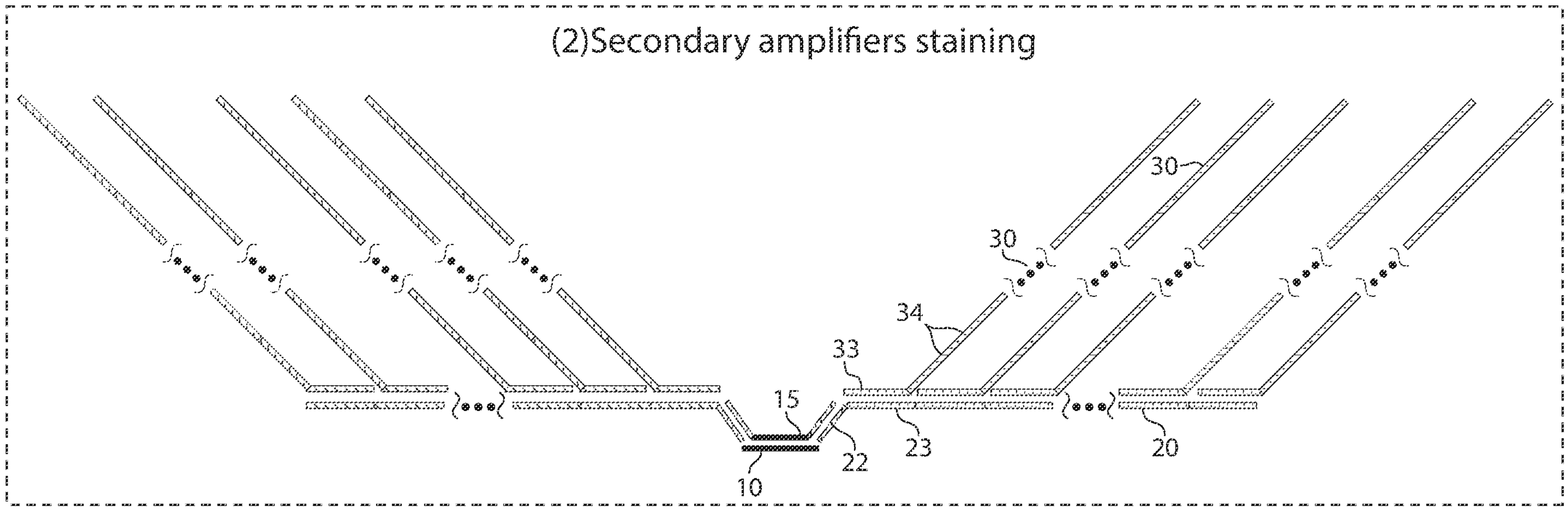

FIG. 1C

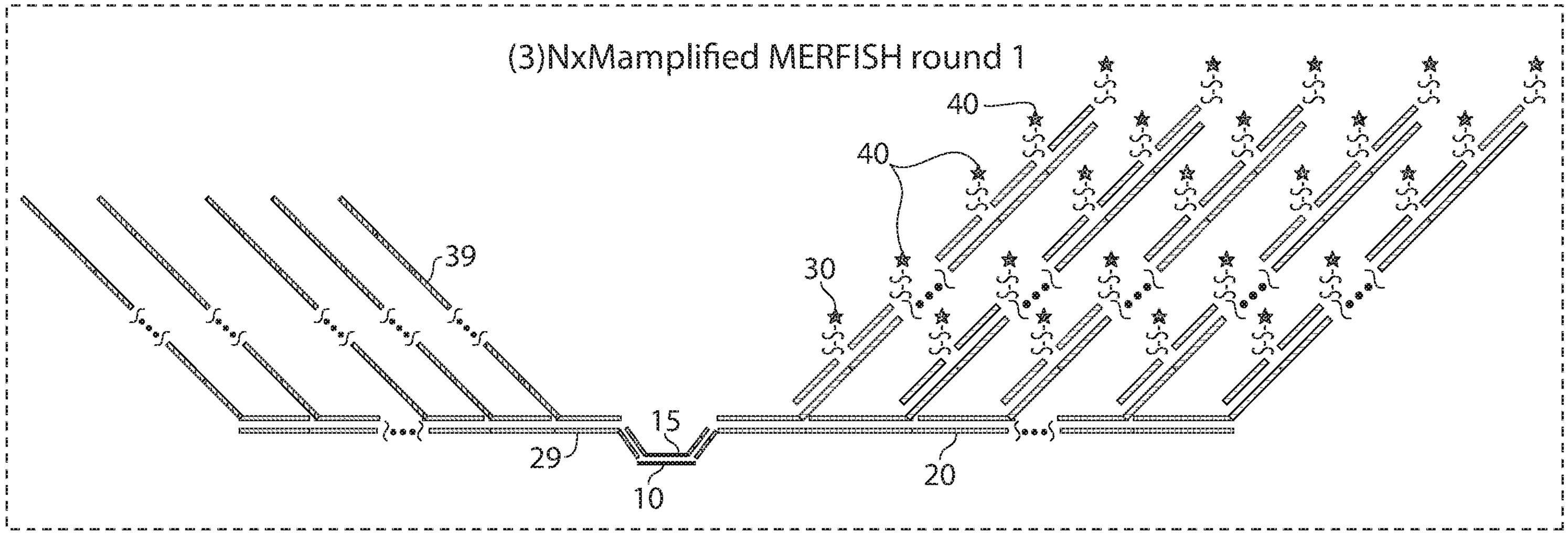

Fig. 1D

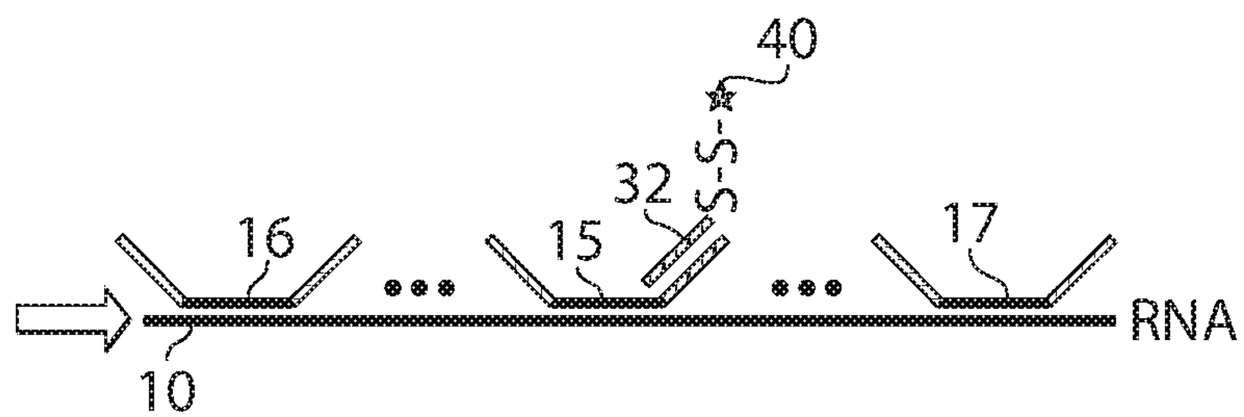

Unamplified MERFISH round1

FIG. 1E

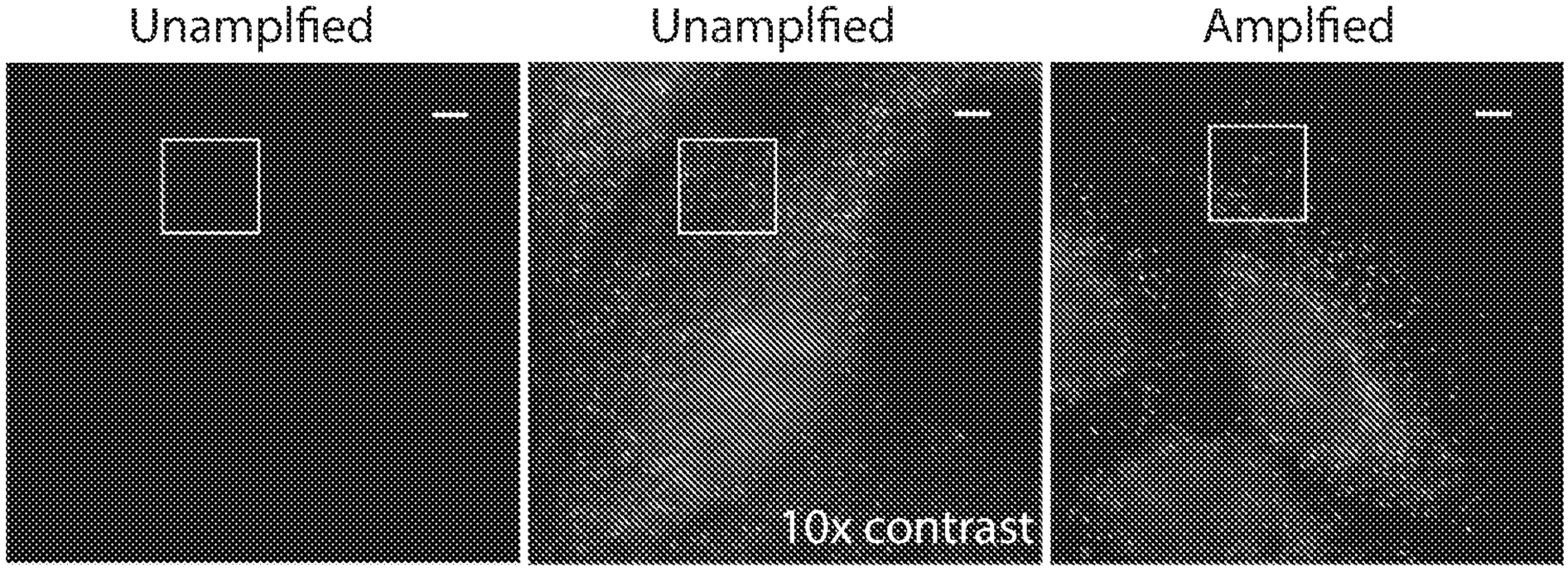
Unamplfied
Unamplfied
Amplfied
10x contrast

FIG. 2A

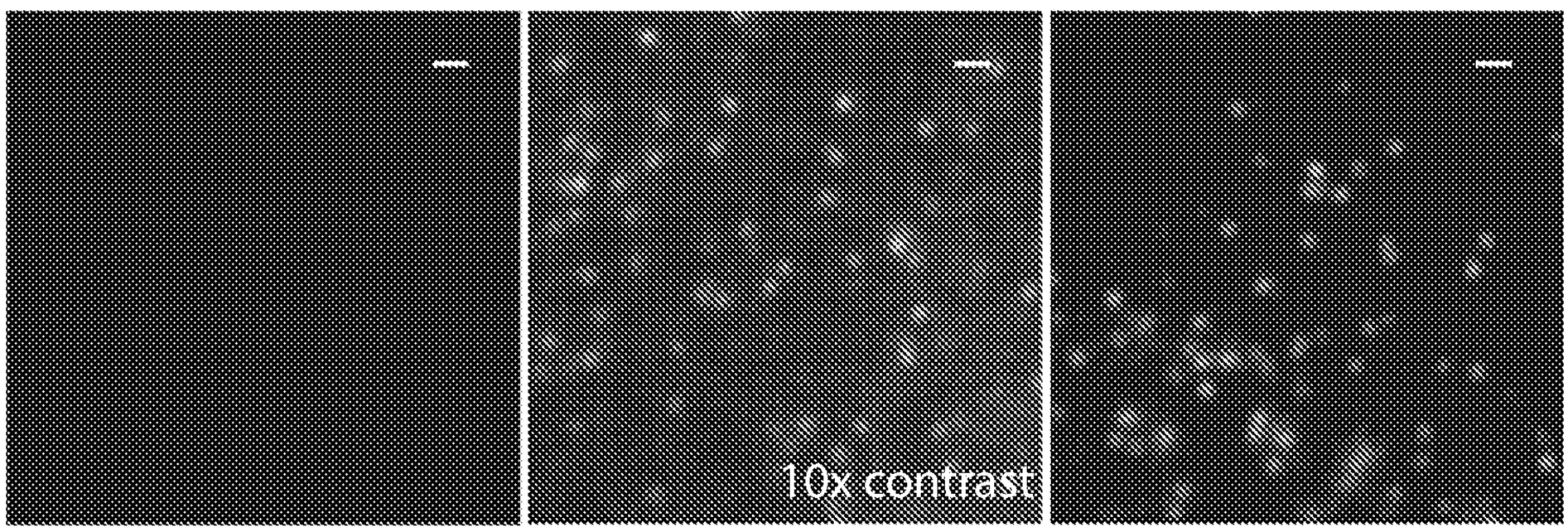
10x contrast

FIG. 2B

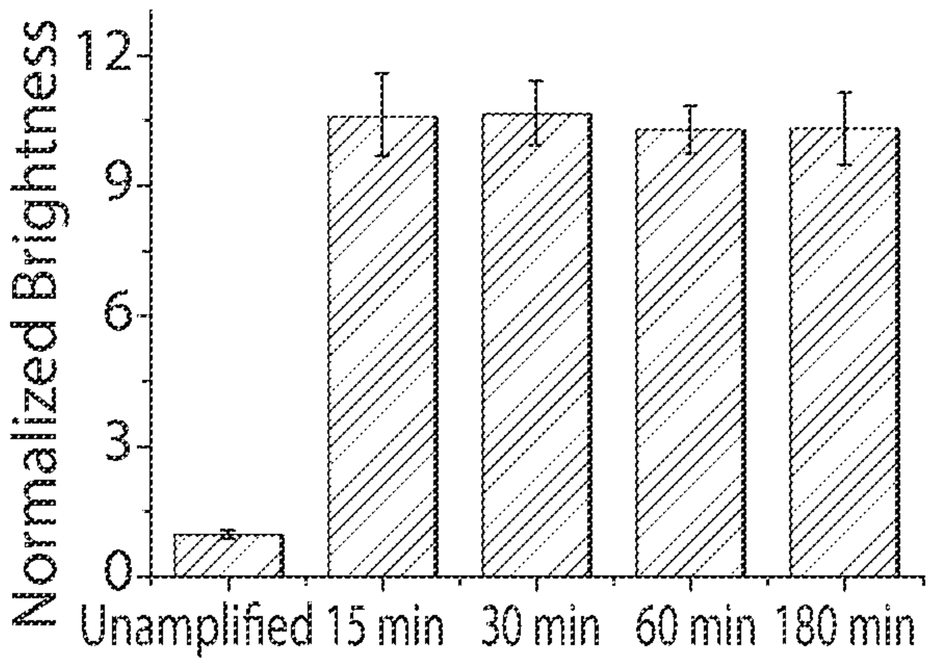

FIG. 2C

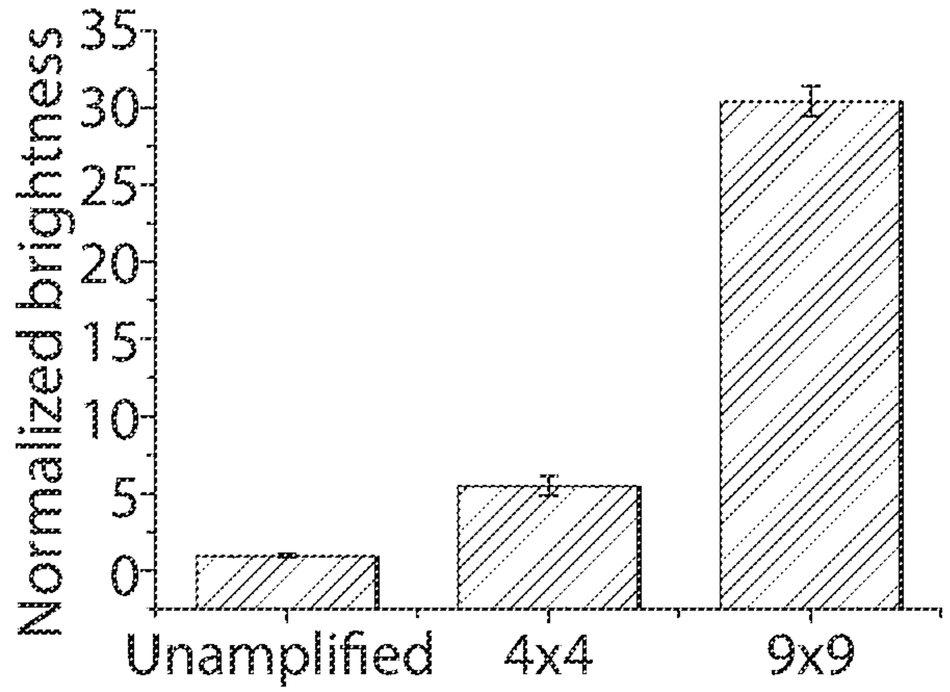

FIG. 2D

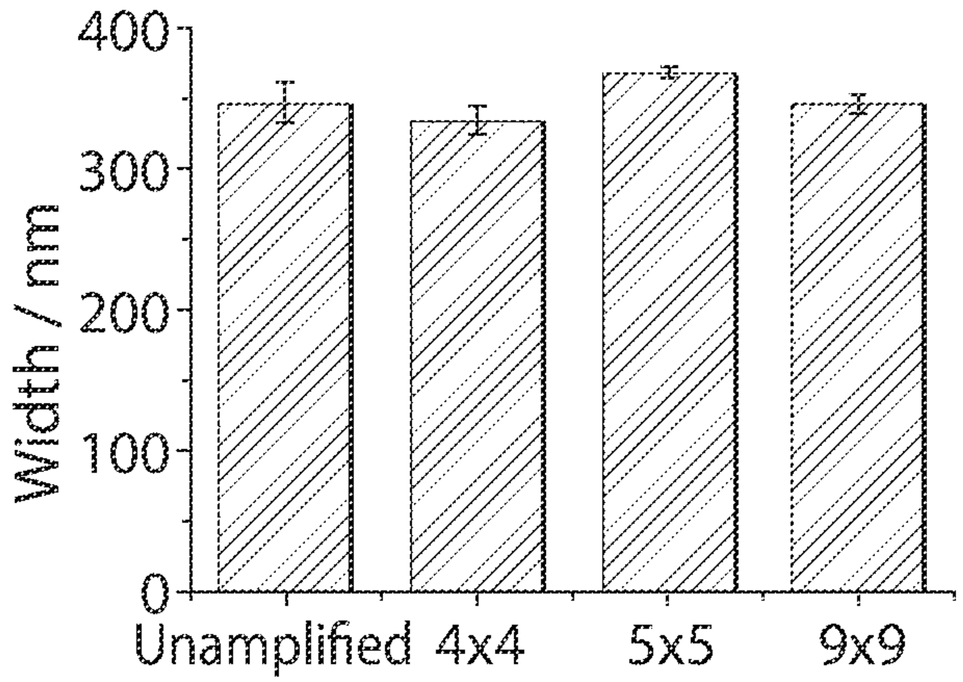

FIG. 2E

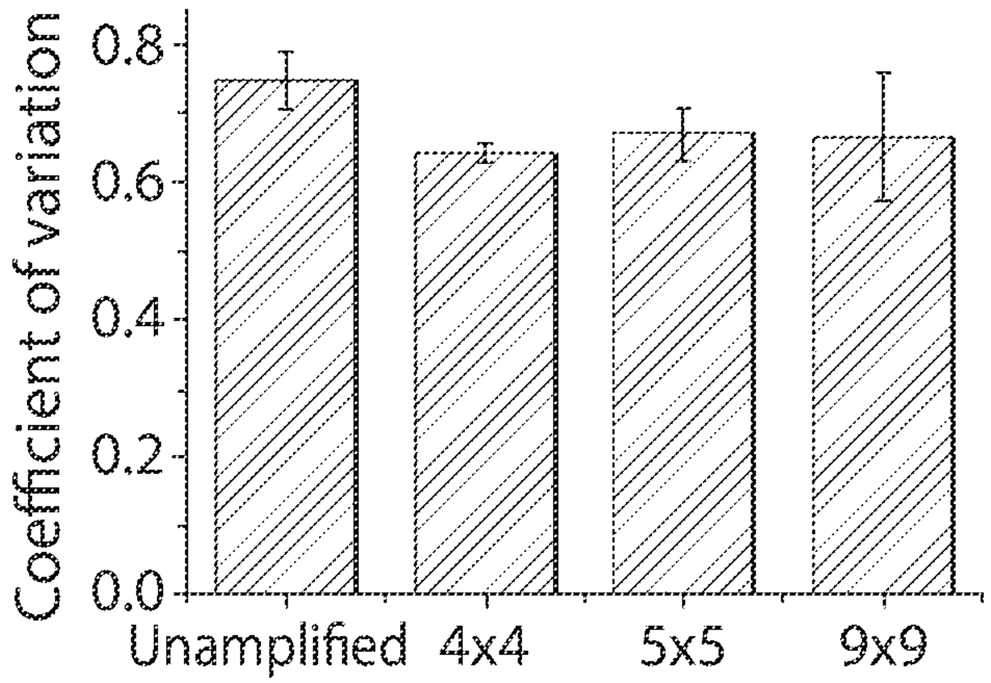

FIG. 2F

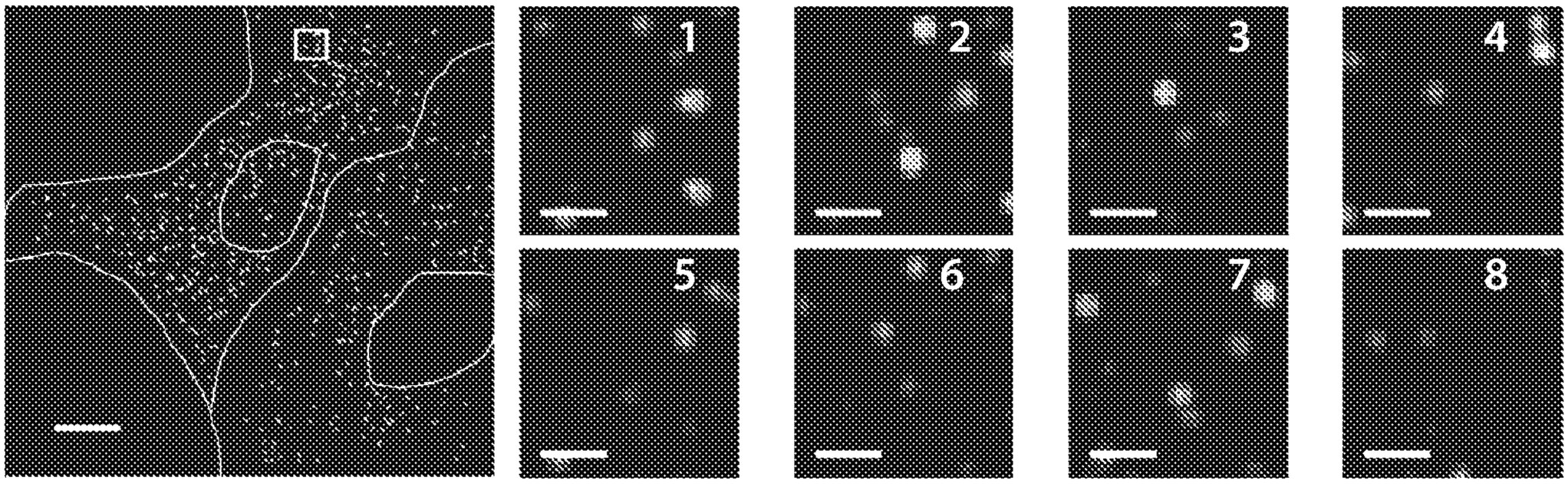
1
2
3
4
5
6
7
8

FIG. 3A

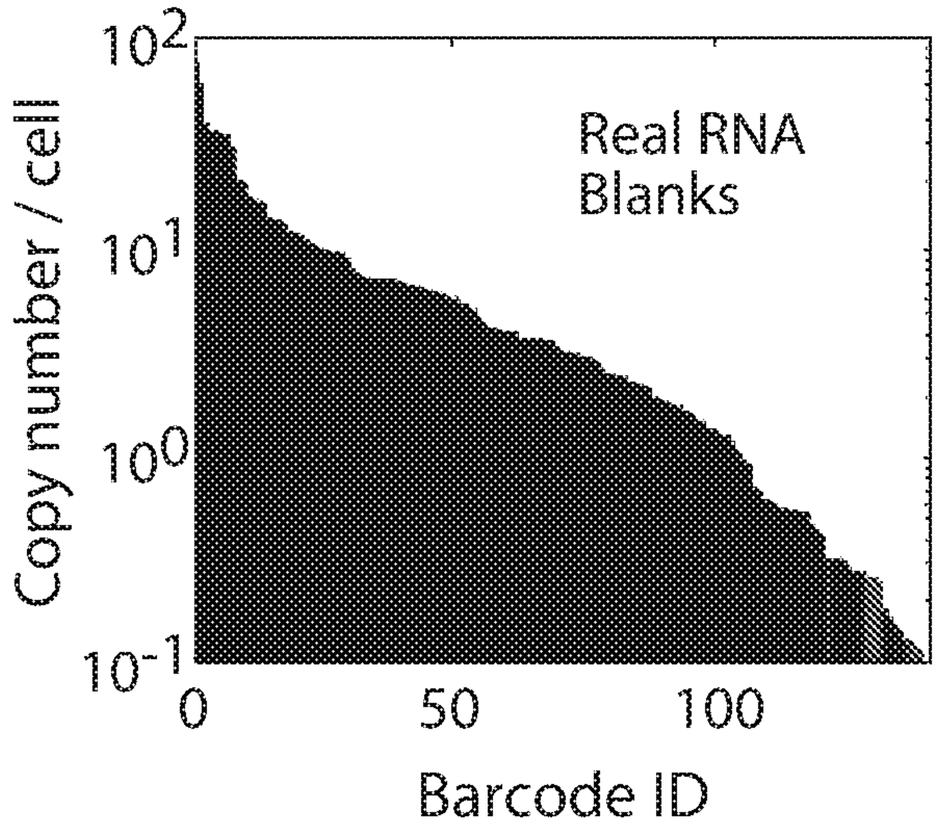
Real RNA
Blanks
Copy number / cell
10^2
10^1
10^0
10^{-1}
0
50
100
Barcode ID

FIG. 3B

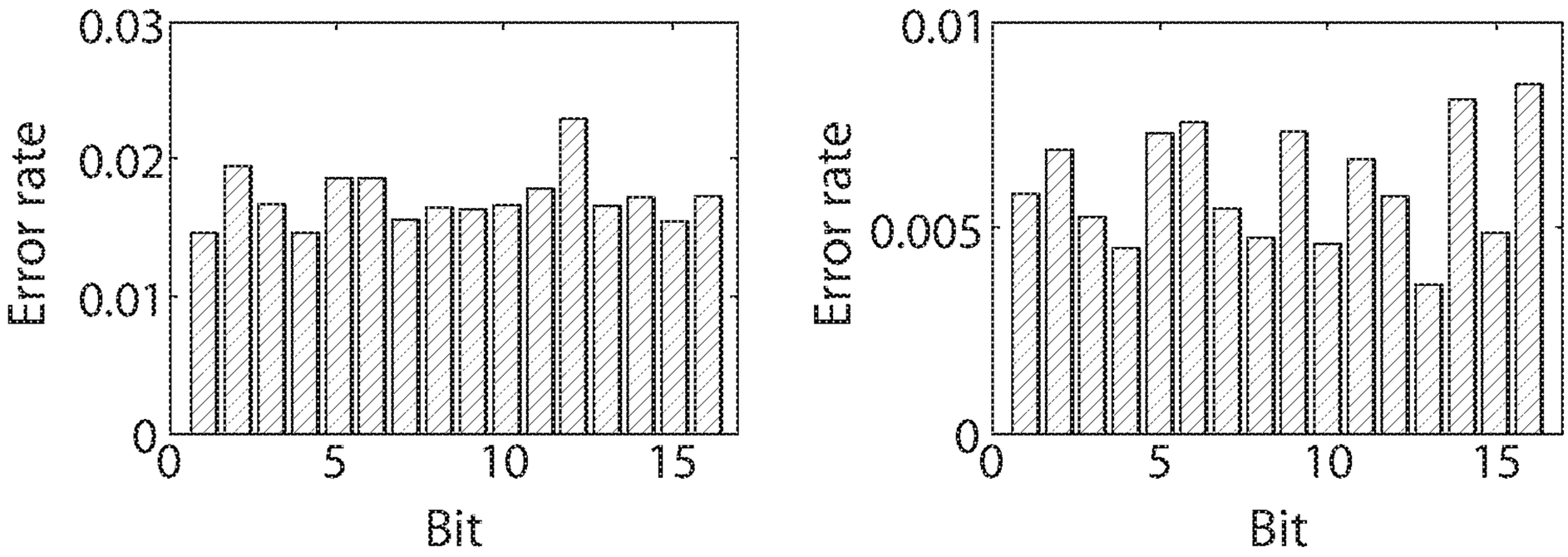
0.03
0.02
0.01
0
Error rate
0
5
10
15
Bit
0.01
0.005
0
Error rate
0
5
10
15
Bit

FIG. 3C

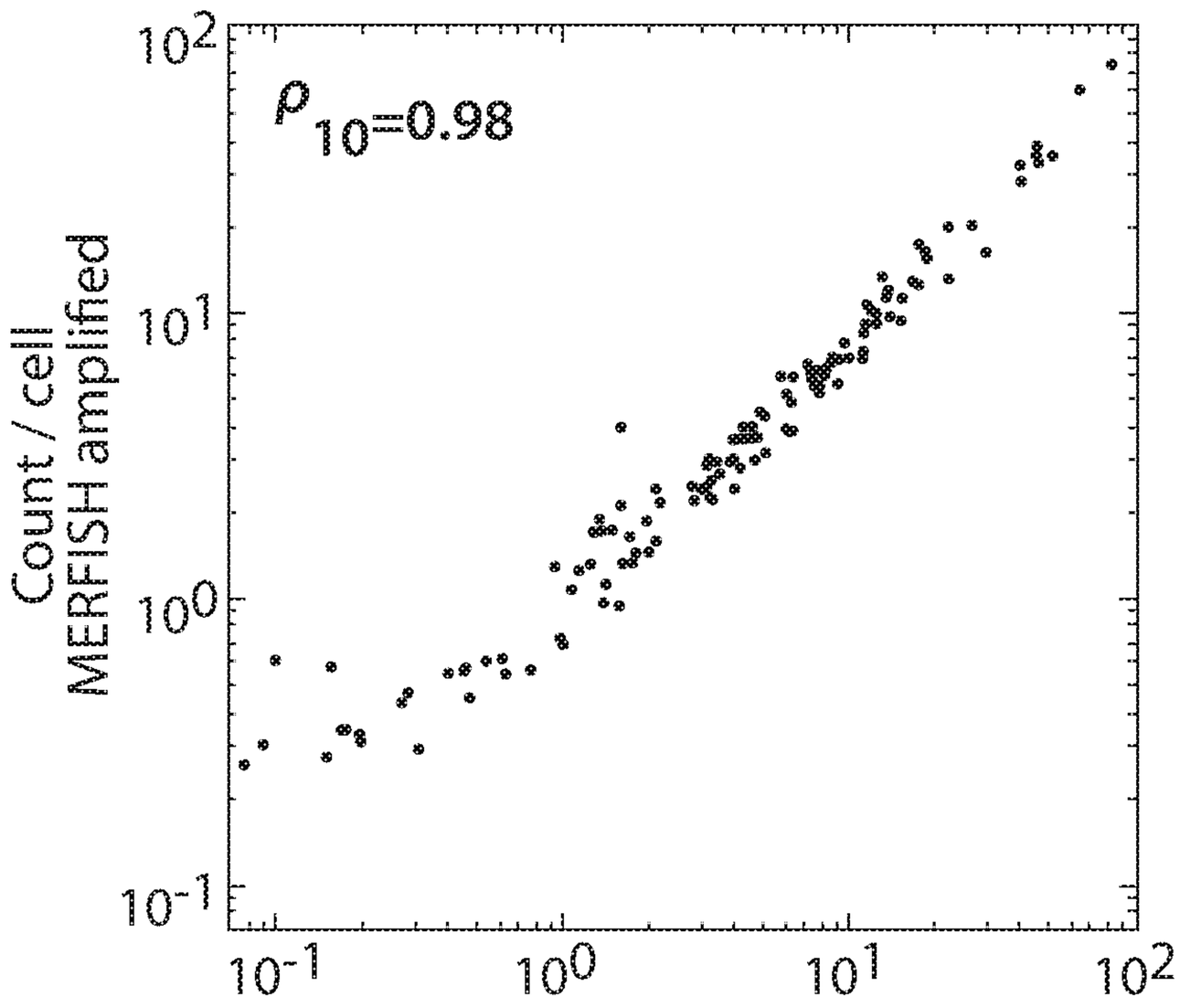
10^2
ρ_{10}=0.98
10^1
10^0
10^{-1}
Count / cell
MERFISH amplified
10^{-1}
10^0
10^1
10^2
Count / cell
MERFISH unamplified

FIG. 3D

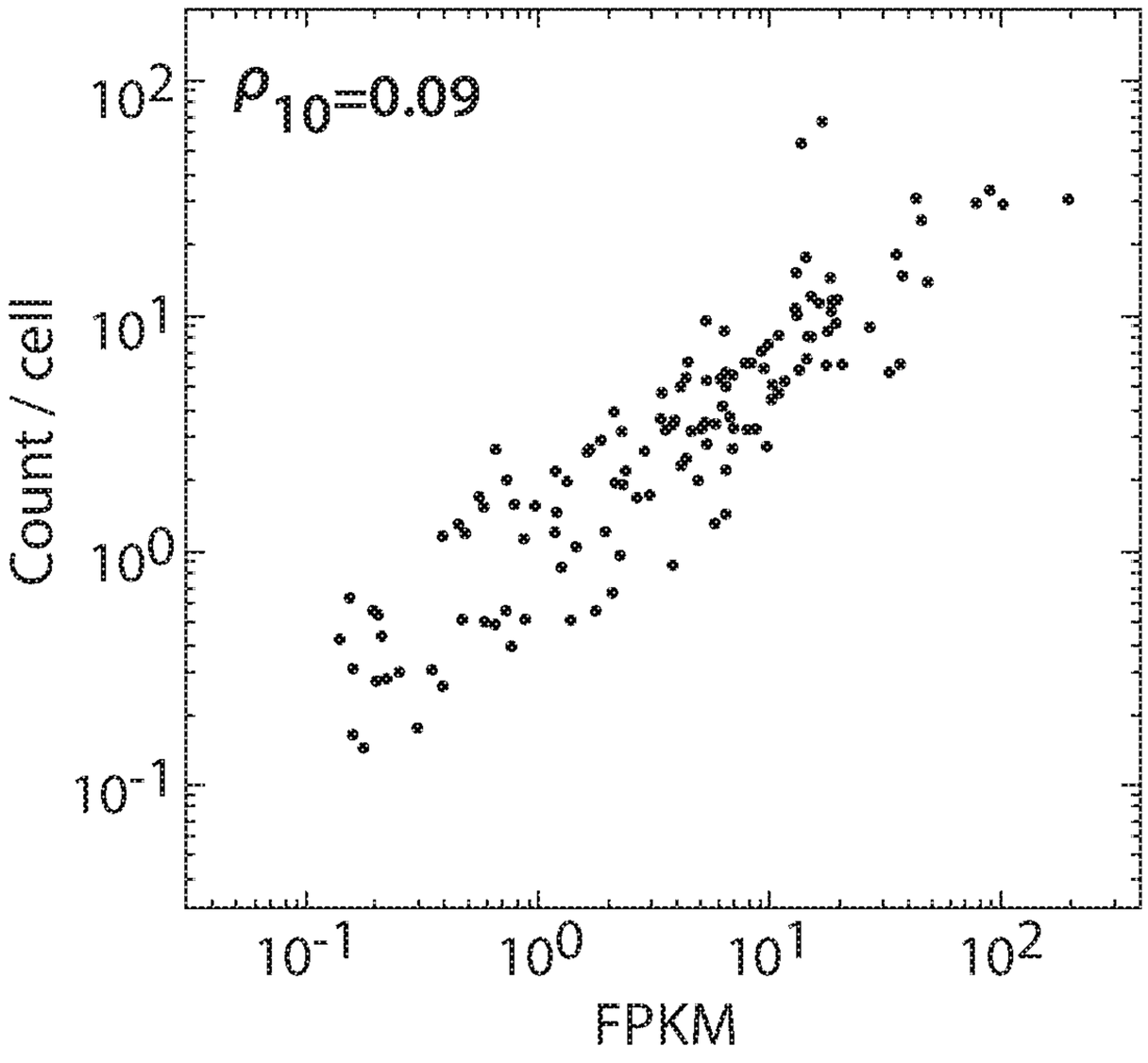
ρ_{10}=0.09
Count / cell
10^2
10^1
10^0
10^{-1}
10^{-1}
10^0
10^1
10^2
FPKM

FIG. 3E

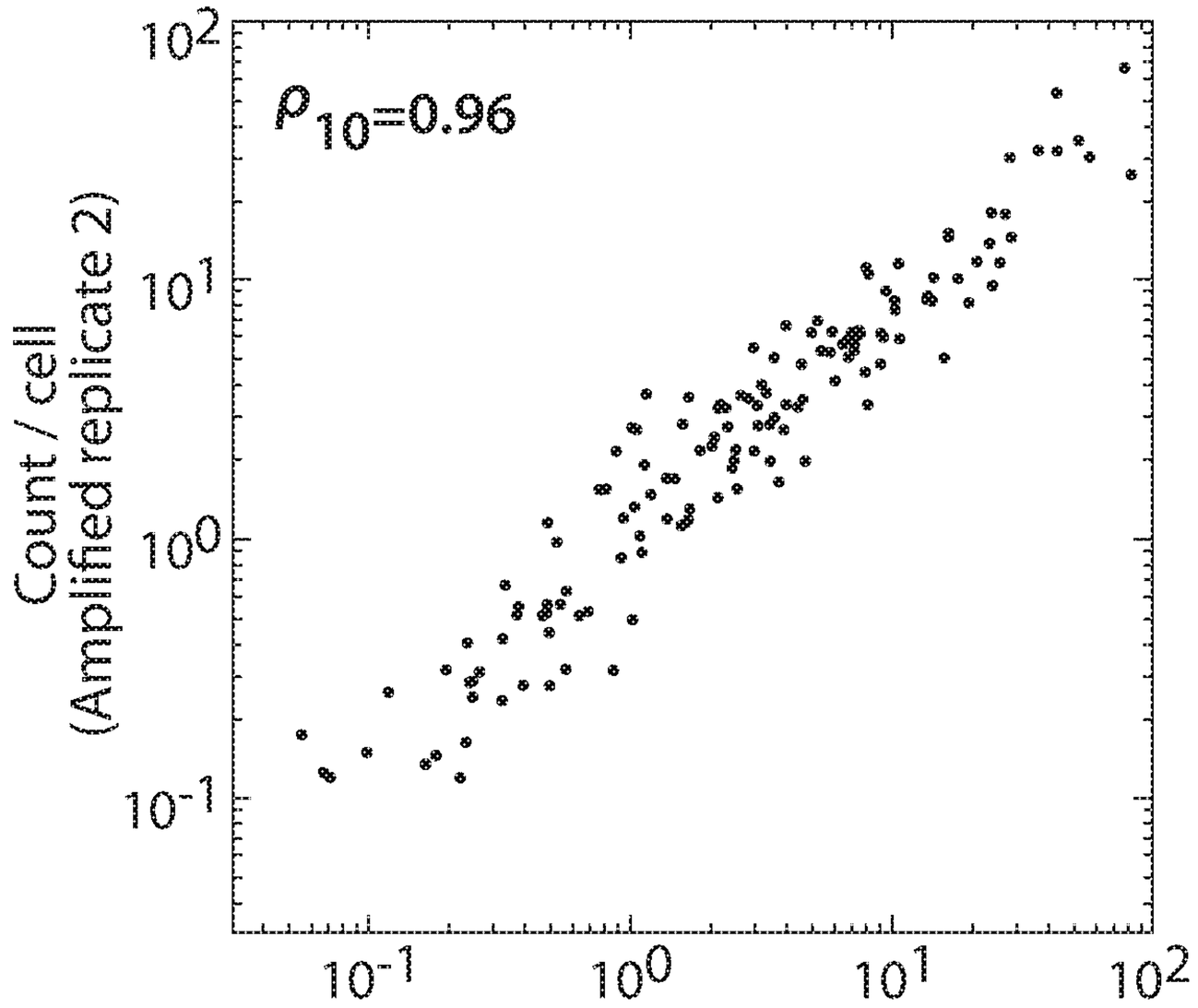
ρ_{10}=0.96
Count / cell
(Amplified replicate 2)
10^2
10^1
10^0
10^{-1}
10^{-1}
10^0
10^1
10^2
Count / cell
(Amplified replicate 1)

FIG. 3F

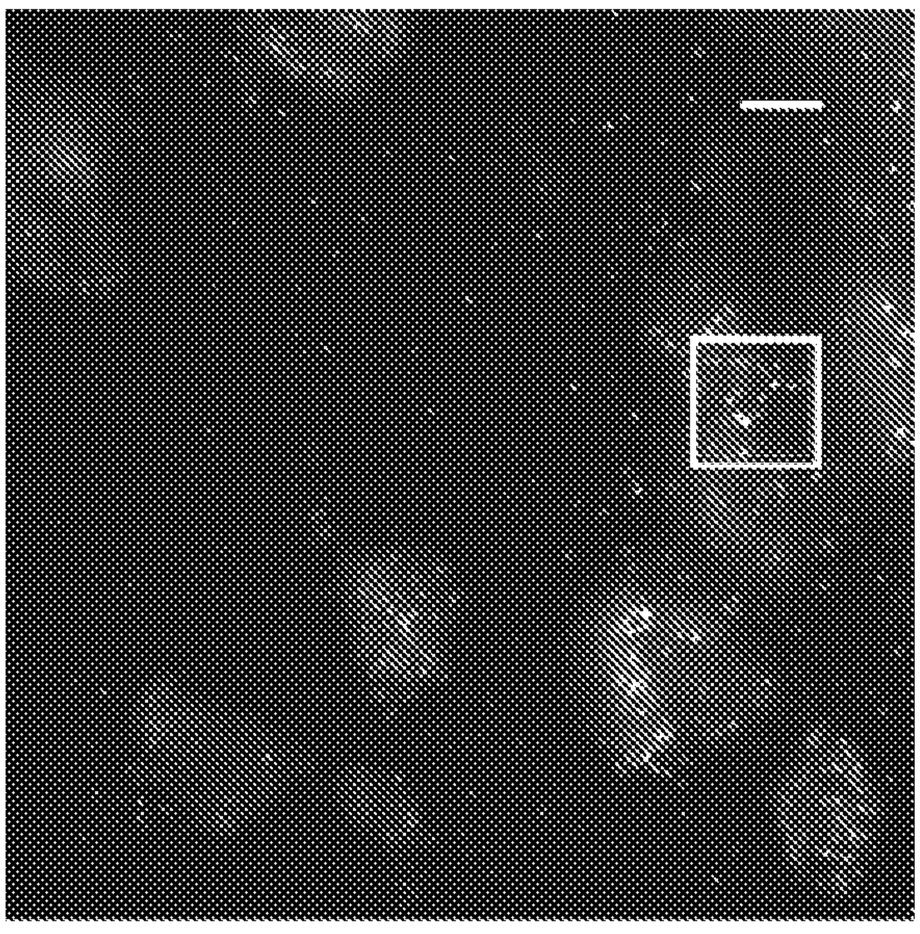

FIG. 4A

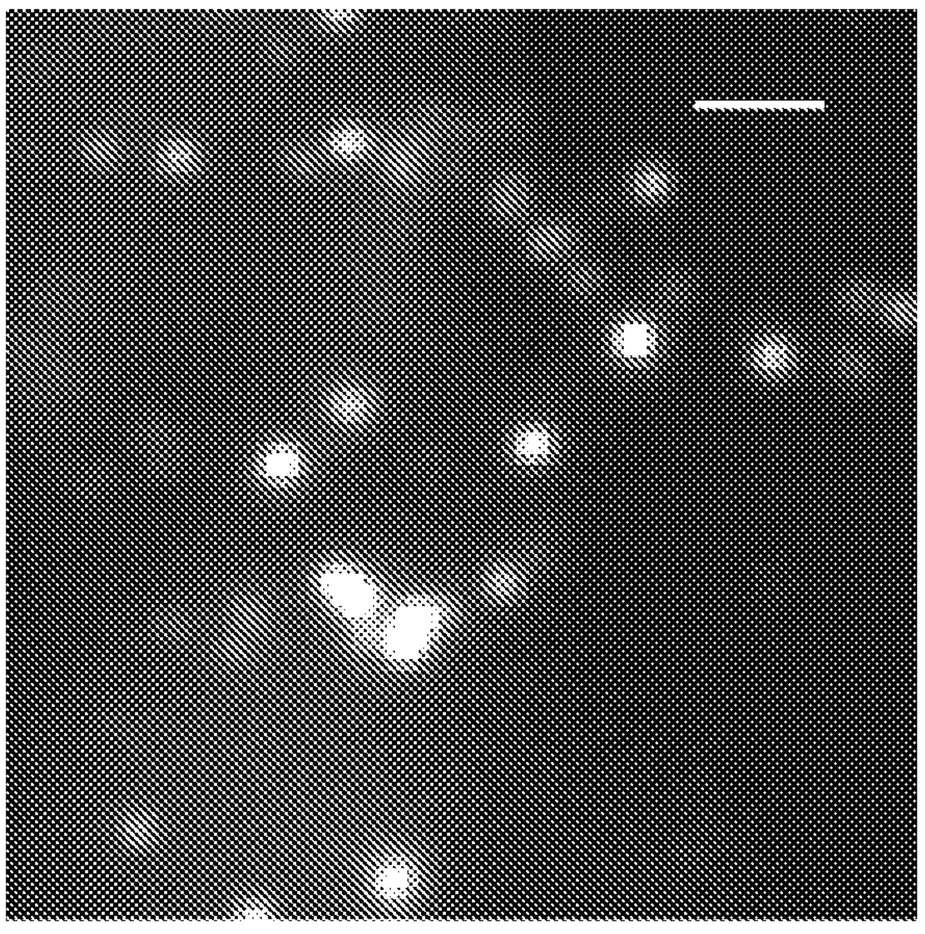

FIG. 4B

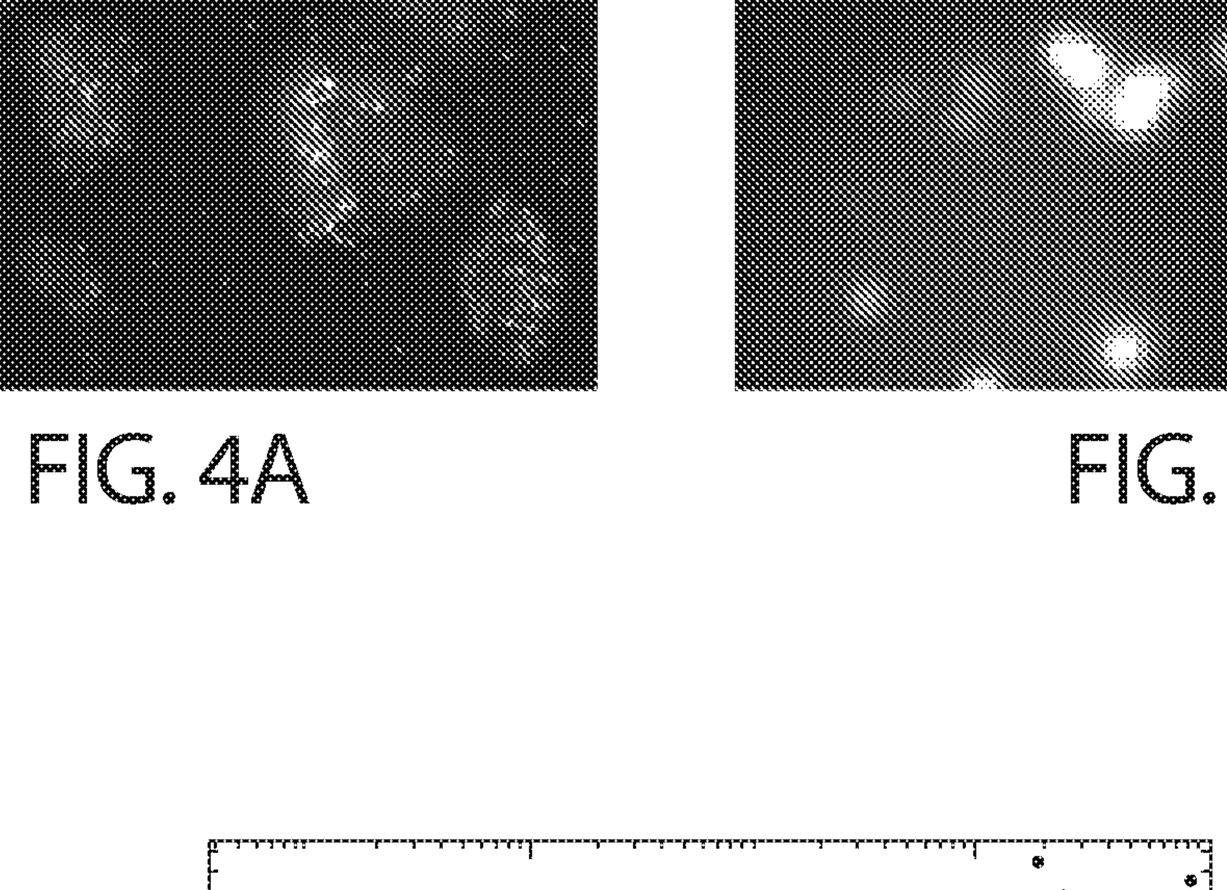

FIG. 4C

Bit	Original readout sequences	Primary amplifier sequences	Secondary amplifier sequences	Final readout sequences
1	ATCCTCCTTCAATACAT CCC (SEQ ID NO: 1)	ACACTTTCACCTTCCCATTA TT ACACTTTCACCTTCCCATTA TT ACACTTTCACCTTCCCATTA TT ACACTTTCACCTTCCCATTA TT ACACTTTCACCTTCCCATTA TT ATCCTCCTTCAATACATCCC (SEQ ID NO: 17)	ATGAGGAAAGTGGTGTGAGA TT ATGAGGAAAGTGGTGTGAGA TT ATGAGGAAAGTGGTGTGAGA TT ATGAGGAAAGTGGTGTGAGA TT ATGAGGAAAGTGGTGTGAGA TA TAATGGGAAGGTGAAAGTGT (SEQ ID NO: 33)	TCTCACACCACTTTCC TCAT (SEQ ID NO: 49)
2	ACACTACCACCATTTC CTAT (SEQ ID NO: 2)	TCCCAACACATCCTATCTCA TA TCCCAACACATCCTATCTCA TA TCCCAACACATCCTATCTCA TA TCCCAACACATCCTATCTCA TA TCCCAACACATCCTATCTCA TA ACACTACCACCATTTCCTAT (SEQ ID NO: 18)	GAGGAGTGGATAAATGGTGT AT GAGGAGTGGATAAATGGTGT AT GAGGAGTGGATAAATGGTGT AT GAGGAGTGGATAAATGGTGT AT GAGGAGTGGATAAATGGTGT AT TGAGATAGGATGTGTTGGGA (SEQ ID NO: 34)	ACACCATTTATCCACT CCTC (SEQ ID NO: 50)
3	ACTCCACTACTACTCA CTCT (SEQ ID NO: 3)	ACCCATTACTCCATTACCAT AT ACCCATTACTCCATTACCAT AT ACCCATTACTCCATTACCAT AT ACCCATTACTCCATTACCAT AT ACCCATTACTCCATTACCAT AT ACTCCACTACTACTCACTCT (SEQ ID NO: 19)	AGTGTGGGATTGATGAGATA TT AGTGTGGGATTGATGAGATA TT AGTGTGGGATTGATGAGATA TT AGTGTGGGATTGATGAGATA TT AGTGTGGGATTGATGAGATA TT ATGGTAATGGAGTAATGGGT (SEQ ID NO: 35)	TATCTCATCAATCCCA CACT (SEQ ID NO: 51)
4	ACCCTCTAACTTCCAT CACA (SEQ ID NO: 4)	TATCATCCTTACACCTCACT AA TATCATCCTTACACCTCACT AA TATCATCCTTACACCTCACT AA TATCATCCTTACACCTCACT AA TATCATCCTTACACCTCACT AA ACCCTCTAACTTCCATCACA (SEQ ID NO: 20)	TGTGGTTTGGAGATGATAGA TA TGTGGTTTGGAGATGATAGA TA TGTGGTTTGGAGATGATAGA TA TGTGGTTTGGAGATGATAGA TA TGTGGTTTGGAGATGATAGA TA AGTGAGGTGTAAGGATGATA (SEQ ID NO: 36)	TCTATCATCTCCAAAC CACA (SEQ ID NO: 52)
5	ACCACAACCCATTCCT TTCA (SEQ ID NO: 5)	ACTCTCCTTTCCCATAACCT AT ACTCTCCTTTCCCATAACCT AT ACTCTCCTTTCCCATAACCT AT ACTCTCCTTTCCCATAACCT AT ACTCTCCTTTCCCATAACCT AT ACCACAACCCATTCCTTTCA (SEQ ID NO: 21)	GAGATTAGAGATGAGTTGGA TA GAGATTAGAGATGAGTTGGA TA GAGATTAGAGATGAGTTGGA TA GAGATTAGAGATGAGTTGGA TA GAGATTAGAGATGAGTTGGA TA AGGTTATGGGAAAGGAGAGT (SEQ ID NO: 37)	TCCAACTCATCTCTAA TCTC (SEQ ID NO: 53)
6	TTTCTACCACTAATCAA CCC (SEQ ID NO: 6)	ATCATCAACACCTCATCAAC AT ATCATCAACACCTCATCAAC AT ATCATCAACACCTCATCAAC AT ATCATCAACACCTCATCAAC AT ATCATCAACACCTCATCAAC AT TTTCTACCACTAATCAACCC (SEQ ID NO: 22)	AGTTGAGGTGGGAGAGTATT AT AGTTGAGGTGGGAGAGTATT AT AGTTGAGGTGGGAGAGTATT AT AGTTGAGGTGGGAGAGTATT AT GTTGATGAGGTGTTGATGAT (SEQ ID NO: 38)	AATACTCTCCCACCTC AACT (SEQ ID NO: 54)

FIG. 5A

7	ACCCTTTACAAACACA CCCT (SEQ ID NO: 7)	ACCCTTTCAATCCATTCCAA TT ACCCTTTCAATCCATTCCAA TT ACCCTTTCAATCCATTCCAA TT ACCCTTTCAATCCATTCCAA TT ACCCTTTCAATCCATTCCAA TT ACCCTTTACAAACACACCCT (SEQ ID NO: 23)	GGGTAGTGGGAATGATTTAT AT GGGTAGTGGGAATGATTTAT AT GGGTAGTGGGAATGATTTAT AT GGGTAGTGGGAATGATTTAT AT GGGTAGTGGGAATGATTTAT AT TTGGAATGGATTGAAAGGGT (SEQ ID NO: 39)	ATAAATCATTCCCACT ACCC (SEQ ID NO: 55)
8	TCCTATTCTCAACCTAA CCT (SEQ ID NO: 8)	ACTTCTCACCTACCAATCAT AT ACTTCTCACCTACCAATCAT AT ACTTCTCACCTACCAATCAT AT ACTTCTCACCTACCAATCAT AT ACTTCTCACCTACCAATCAT AT TCCTATTCTCAACCTAACCT (SEQ ID NO: 24)	AGGTAATGAGTTAGAGGTGA TT AGGTAATGAGTTAGAGGTGA TT AGGTAATGAGTTAGAGGTGA TT AGGTAATGAGTTAGAGGTGA TT AGGTAATGAGTTAGAGGTGA TT ATGATTGGTAGGTGAGAAGT (SEQ ID NO: 40)	TCACCTCTAACTCATT ACCT (SEQ ID NO: 56)
9	TATCCTTCAATCCCTCC ACA (SEQ ID NO: 9)	TCCCACACATCATTTCCATT AA TCCCACACATCATTTCCATT AA TCCCACACATCATTTCCATT AA TCCCACACATCATTTCCATT AA TCCCACACATCATTTCCATT AA TATCCTTCAATCCCTCCACA (SEQ ID NO: 25)	GGGATGTGATTTGTTAGGAA TT GGGATGTGATTTGTTAGGAA TT GGGATGTGATTTGTTAGGAA TT GGGATGTGATTTGTTAGGAA TT GGGATGTGATTTGTTAGGAA TT AATGGAAATGATGTGTGGGA (SEQ ID NO: 41)	TTCCTAACAAATCACA TCCC (SEQ ID NO: 57)
10	ACATTACACCTCATTCT CCC (SEQ ID NO: 10)	TCCTCCTATTCCCTAACAAC TA TCCTCCTATTCCCTAACAAC TA TCCTCCTATTCCCTAACAAC TA TCCTCCTATTCCCTAACAAC TA TCCTCCTATTCCCTAACAAC TA ACATTACACCTCATTCTCCC (SEQ ID NO: 26)	GATGAAGATTGAGGGAAGAA TT GATGAAGATTGAGGGAAGAA TT GATGAAGATTGAGGGAAGAA TT GATGAAGATTGAGGGAAGAA TT GATGAAGATTGAGGGAAGAA TT GTTGTTAGGGAATAGGAGGA (SEQ ID NO: 42)	TTCTTCCCTCAATCTT CATC (SEQ ID NO: 58)
11	TTTACTCCCTACACCTC CAA (SEQ ID NO: 11)	TCCCATCTTCTTCCTAACTA TA TCCCATCTTCTTCCTAACTA TA TCCCATCTTCTTCCTAACTA TA TCCCATCTTCTTCCTAACTA TA TCCCATCTTCTTCCTAACTA TA TTTACTCCCTACACCTCCAA (SEQ ID NO: 27)	GGGATTATGGGTTTGTAGTA TT GGGATTATGGGTTTGTAGTA TT GGGATTATGGGTTTGTAGTA TT GGGATTATGGGTTTGTAGTA TT GGGATTATGGGTTTGTAGTA TA TAGTTAGGAAGAAGATGGGA (SEQ ID NO: 43)	TACTACAAACCCATAA TCCC (SEQ ID NO: 59)
12	TTCTCCCTCTATCAACT CTA (SEQ ID NO: 12)	TCACAATCCTACCACTACCT AA TCACAATCCTACCACTACCT AA TCACAATCCTACCACTACCT AA TCACAATCCTACCACTACCT AA TCACAATCCTACCACTACCT AA TTCTCCCTCTATCAACTCTA (SEQ ID NO: 28)	TAGAGGGAGTAAGATGAGGA TA TAGAGGGAGTAAGATGAGGA TA TAGAGGGAGTAAGATGAGGA TA TAGAGGGAGTAAGATGAGGA TA TAGAGGGAGTAAGATGAGGA TA AGGTAGTGGTAGGATTGTGA (SEQ ID NO: 44)	TCCTCATCTTACTCCC TCTA (SEQ ID NO: 60)
13	ACCCTTACTACTACATC ATC (SEQ ID NO: 13)	TAACCTACACATCTCCACAA TA TAACCTACACATCTCCACAA TA TAACCTACACATCTCCACAA TA TAACCTACACATCTCCACAA TA TAACCTACACATCTCCACAA TA ACCCTTACTACTACATCATC (SEQ ID NO: 29)	GTGAAGTGGAAGGTGAGATT AT GTGAAGTGGAAGGTGAGATT AT GTGAAGTGGAAGGTGAGATT AT GTGAAGTGGAAGGTGAGATT AT GTGAAGTGGAAGGTGAGATT AA TTGTGGAGATGTGTAGGTTA (SEQ ID NO: 45)	AATCTCACCTTCCACT TCAC (SEQ ID NO: 61)

FIG. 5B

14	TCCTAACAACCAACTA CTCC (SEQ ID NO: 14)	TCAATCCATTACCATCCCAC AT TCAATCCATTACCATCCCAC AT TCAATCCATTACCATCCCAC AT TCAATCCATTACCATCCCAC AT TCCTAACAACCAACTACTCC (SEQ ID NO: 30)	GAATGGAGGGTTAGAGGTAA TT GAATGGAGGGTTAGAGGTAA TT GAATGGAGGGTTAGAGGTAA TT GAATGGAGGGTTAGAGGTAA TT GTGGGATGGTAATGGATTGA (SEQ ID NO: 46)	TTACCTCTAACCCTCC ATTC (SEQ ID NO: 62)
15	TCTATCATTACCCTCCT CCT (SEQ ID NO: 15)	AACCAAACCCACTACTACCA TT AACCAAACCCACTACTACCA TT AACCAAACCCACTACTACCA TT AACCAAACCCACTACTACCA TT AACCAAACCCACTACTACCA TT TCTATCATTACCCTCCTCCT (SEQ ID NO: 31)	TGGGATAGTATGTGGAAAGT AA TGGGATAGTATGTGGAAAGT AA TGGGATAGTATGTGGAAAGT AA TGGGATAGTATGTGGAAAGT AA TGGGATAGTATGTGGAAAGT AA TGGTAGTAGTGGGTTTGGTT (SEQ ID NO: 47)	ACTTTCCACATACTAT CCCA (SEQ ID NO: 63)
16	TATTCACCTTACAAACC CTC (SEQ ID NO: 16)	TACCCAACTAAACCCAACTC TA TACCCAACTAAACCCAACTC TA TACCCAACTAAACCCAACTC TA TACCCAACTAAACCCAACTC TA TACCCAACTAAACCCAACTC TA TATTCACCTTACAAACCCTC (SEQ ID NO: 32	AGTTGGGTATGGAGAAAGGT AT AGTTGGGTATGGAGAAAGGT AT AGTTGGGTATGGAGAAAGGT AT AGTTGGGTATGGAGAAAGGT AT AGTTGGGTATGGAGAAAGGT AT GAGTTGGGTTTAGTTGGGTA (SEQ ID NO: 48)	ACCTTTCTCCATACCC AACT (SEQ ID NO: 64)

FIG. 5C