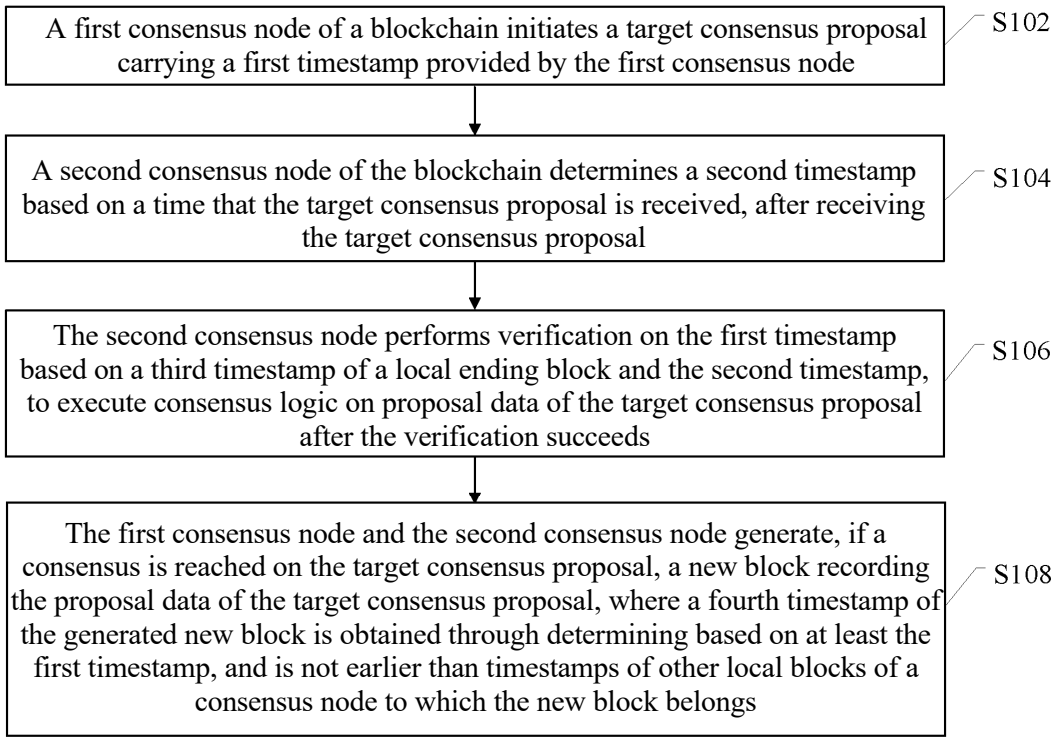
A first consensus node of a blockchain initiates a target consensus proposal carrying a first timestamp provided by the first consensus node
S102
A second consensus node of the blockchain determines a second timestamp based on a time that the target consensus proposal is received, after receiving the target consensus proposal
S104
The second consensus node performs verification on the first timestamp based on a third timestamp of a local ending block and the second timestamp, to execute consensus logic on proposal data of the target consensus proposal after the verification succeeds
S106
The first consensus node and the second consensus node generate, if a consensus is reached on the target consensus proposal, a new block recording the proposal data of the target consensus proposal, where a fourth timestamp of the generated new block is obtained through determining based on at least the first timestamp, and is not earlier than timestamps of other local blocks of a consensus node to which the new block belongs
S108

FIG. 1

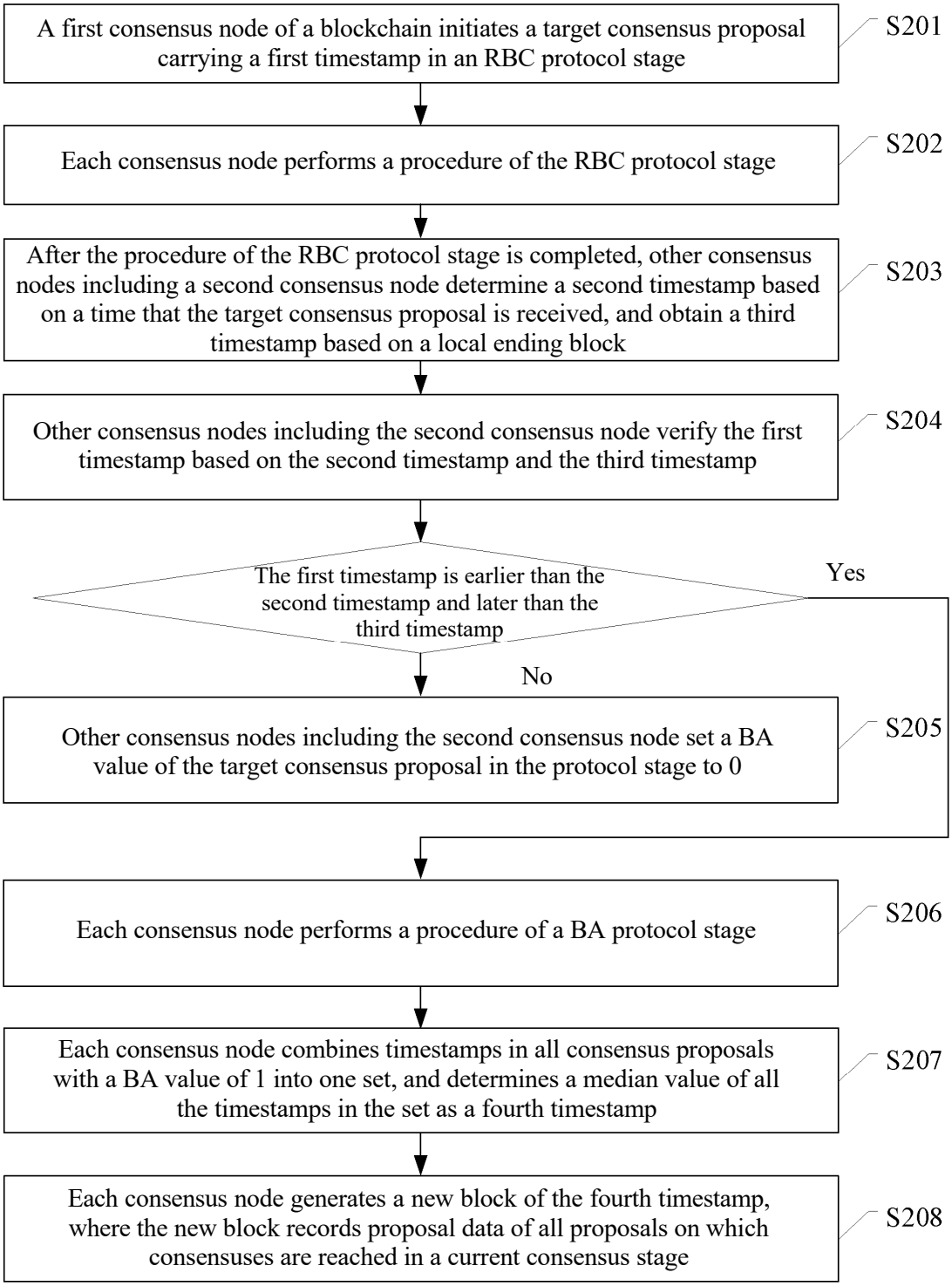
A first consensus node of a blockchain initiates a target consensus proposal carrying a first timestamp in an RBC protocol stage
S201
Each consensus node performs a procedure of the RBC protocol stage
S202
After the procedure of the RBC protocol stage is completed, other consensus nodes including a second consensus node determine a second timestamp based on a time that the target consensus proposal is received, and obtain a third timestamp based on a local ending block
S203
Other consensus nodes including the second consensus node verify the first timestamp based on the second timestamp and the third timestamp
S204
The first timestamp is earlier than the second timestamp and later than the third timestamp
Yes
No
Other consensus nodes including the second consensus node set a BA value of the target consensus proposal in the protocol stage to 0
S205
Each consensus node performs a procedure of a BA protocol stage
S206
Each consensus node combines timestamps in all consensus proposals with a BA value of 1 into one set, and determines a median value of all the timestamps in the set as a fourth timestamp
S207
Each consensus node generates a new block of the fourth timestamp, where the new block records proposal data of all proposals on which consensuses are reached in a current consensus stage
S208

FIG. 2

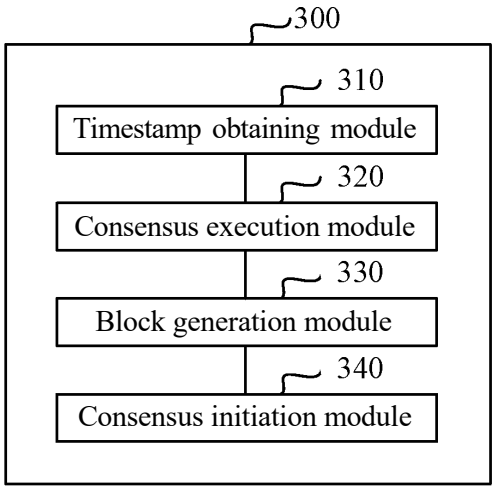
300
310
Timestamp obtaining module
320
Consensus execution module
330
Block generation module
340
Consensus initiation module

FIG. 3

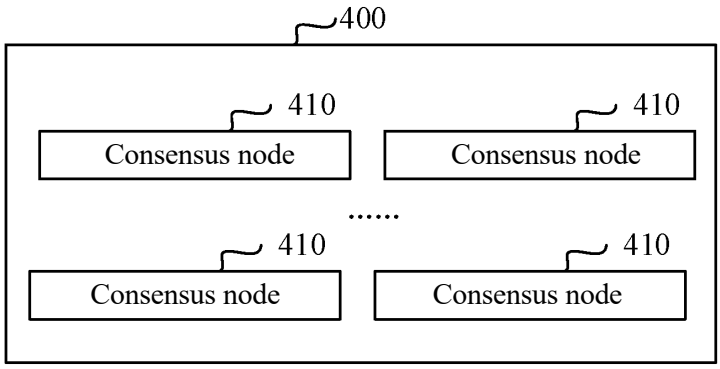
400
410
Consensus node
410
Consensus node
.....
410
Consensus node
410
Consensus node

FIG. 4

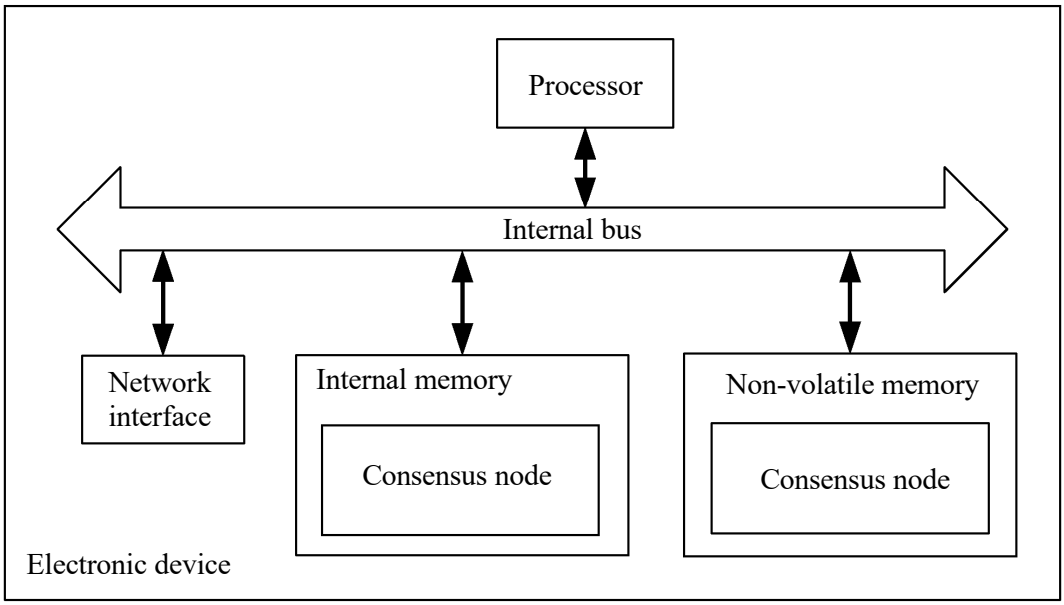
Processor
Internal bus
Network interface
Internal memory
Consensus node
Non-volatile memory
Consensus node
Electronic device

FIG. 5