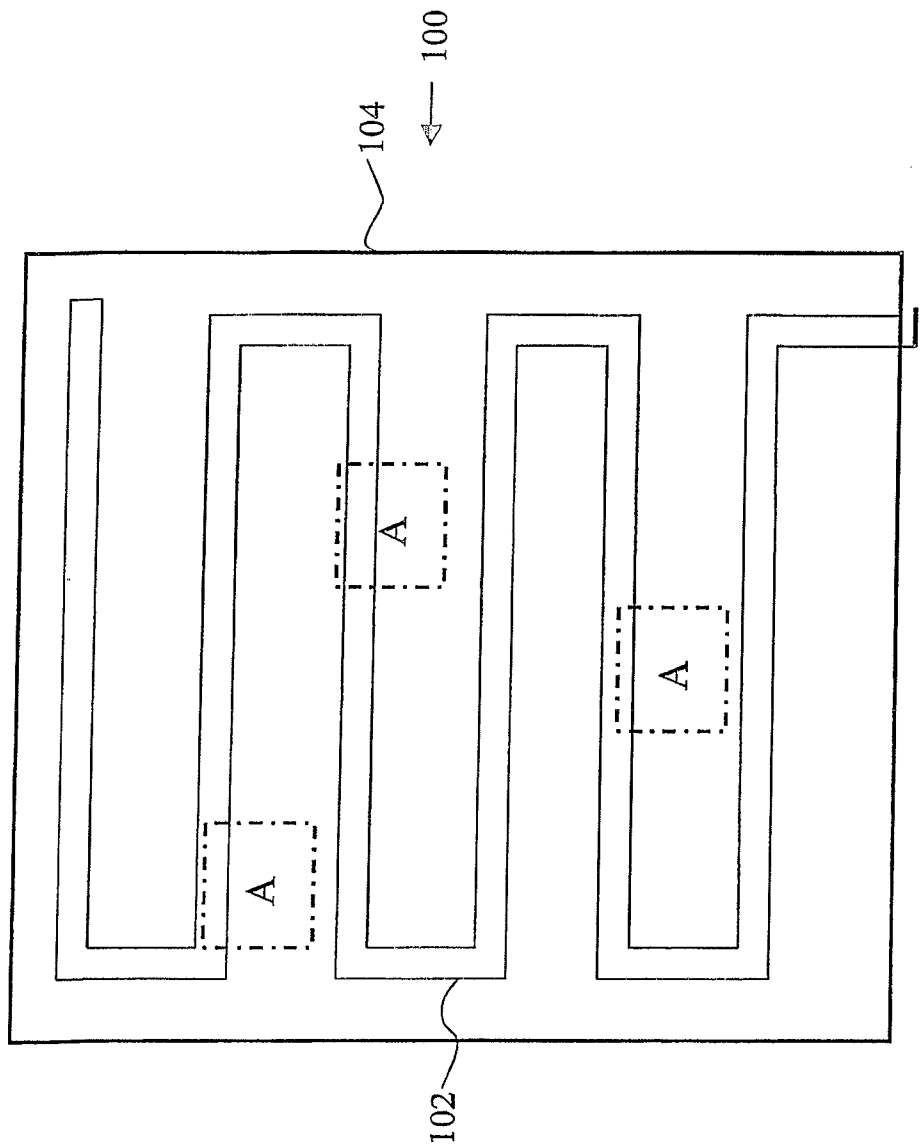

Figure 1a

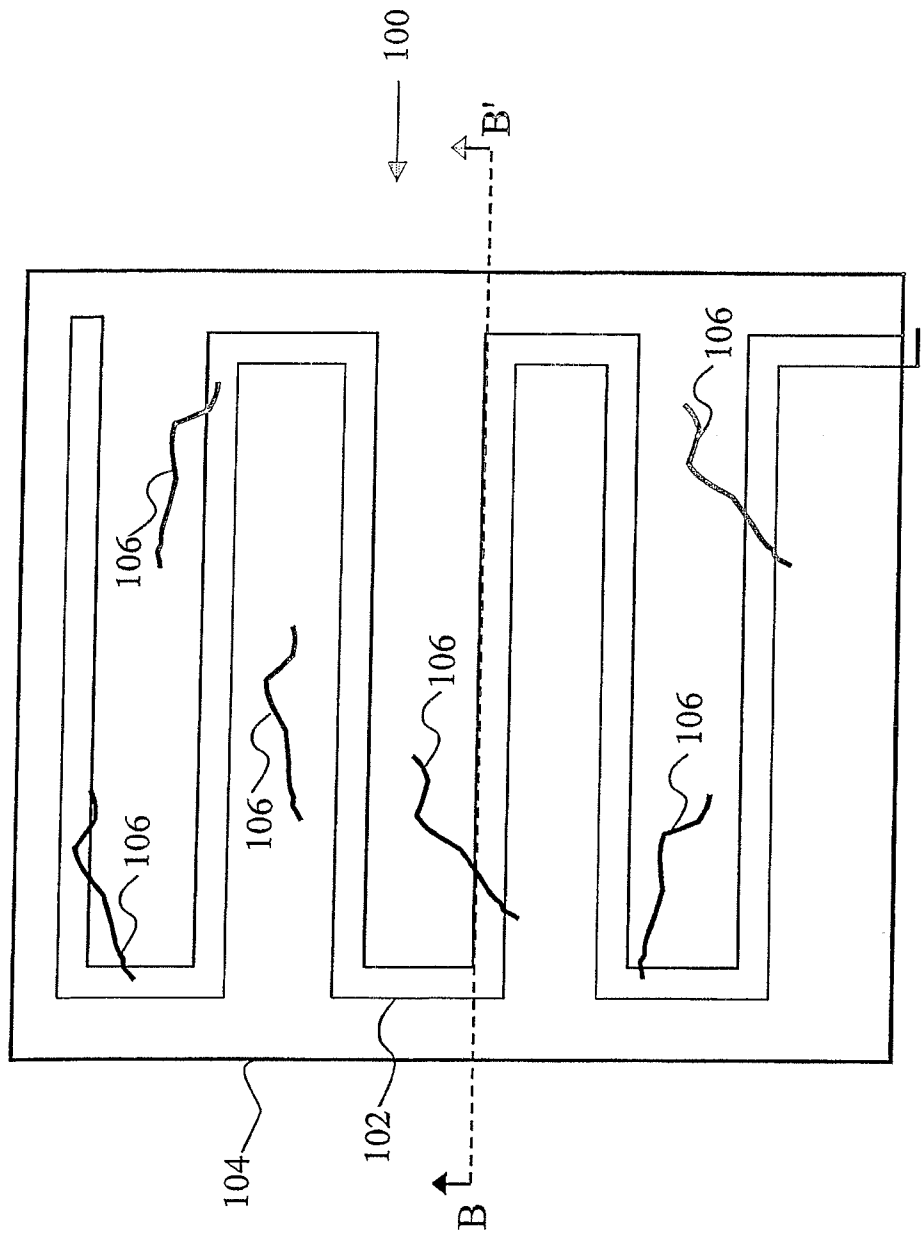

Figure 1b

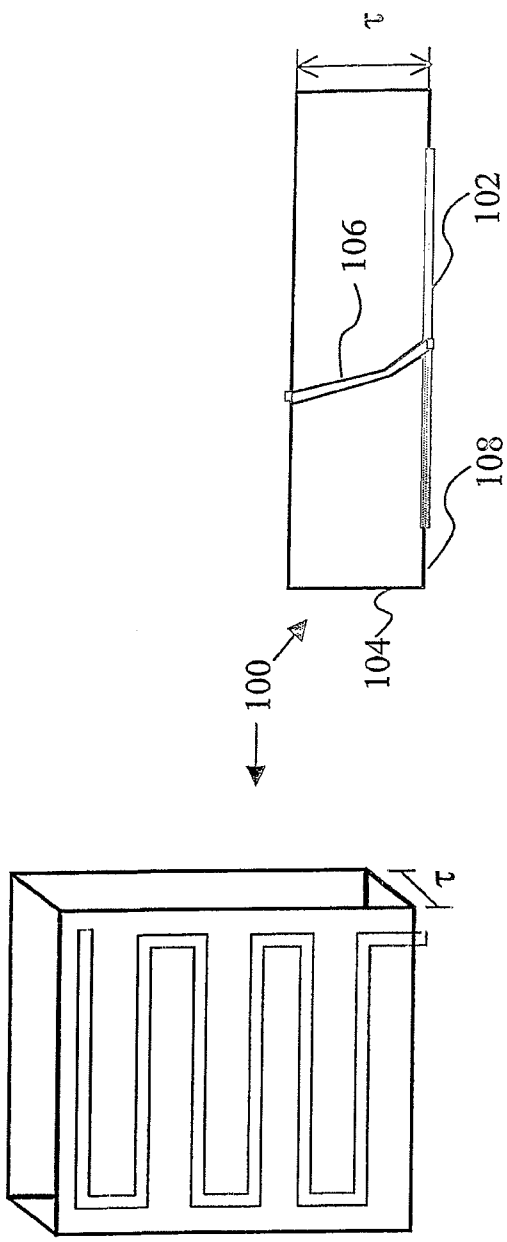

Figure 1c

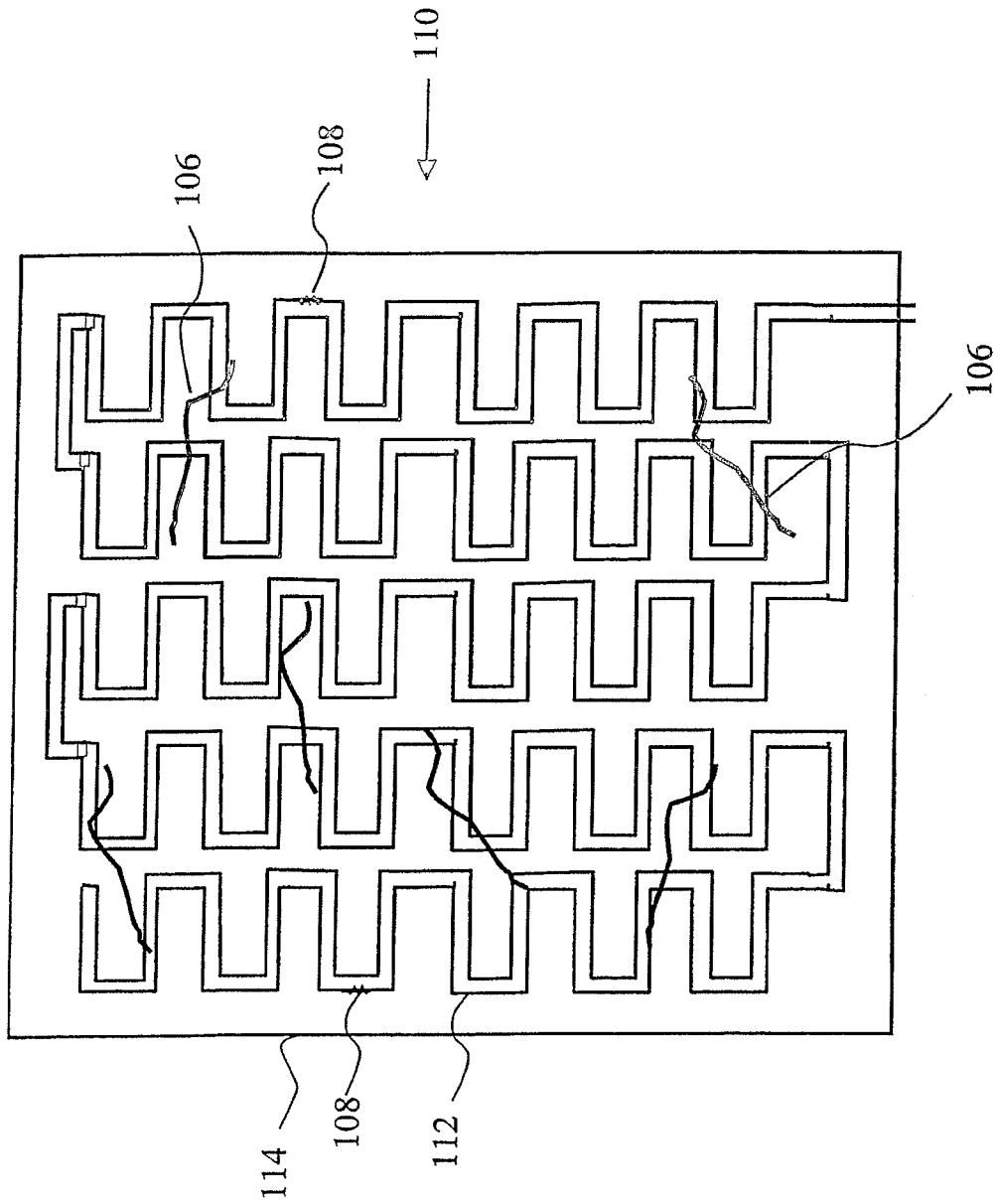

Figure 1d

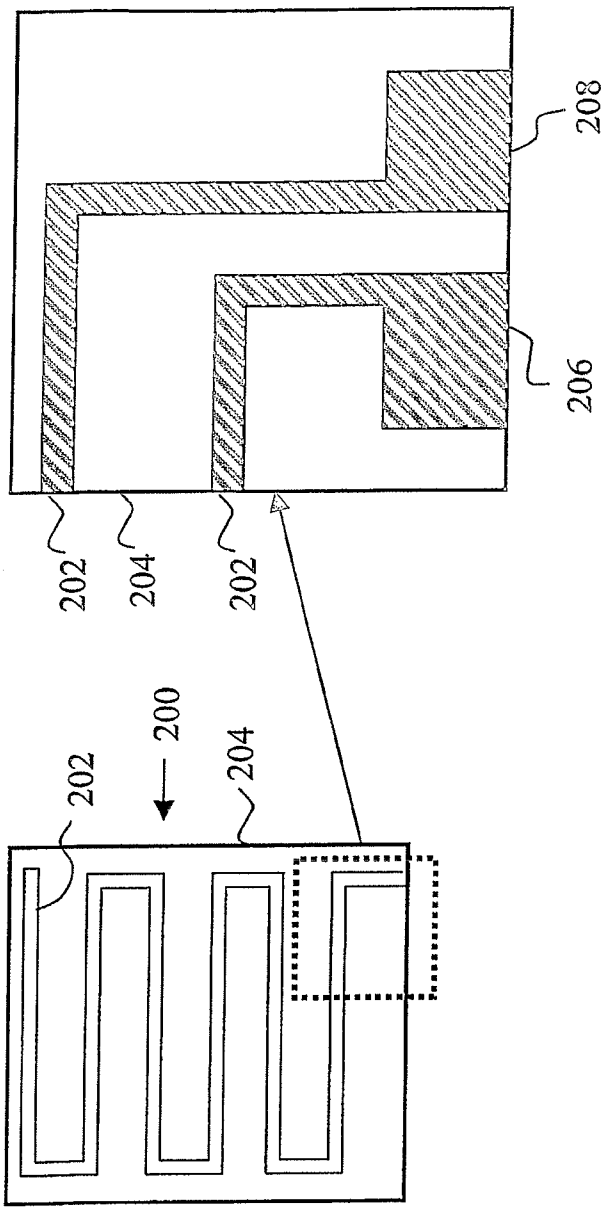

Figure 2

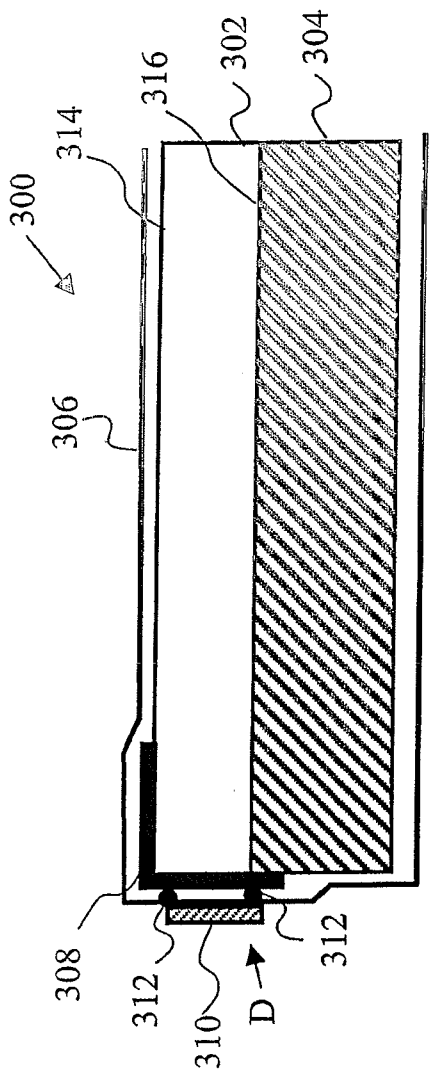

Figure 3

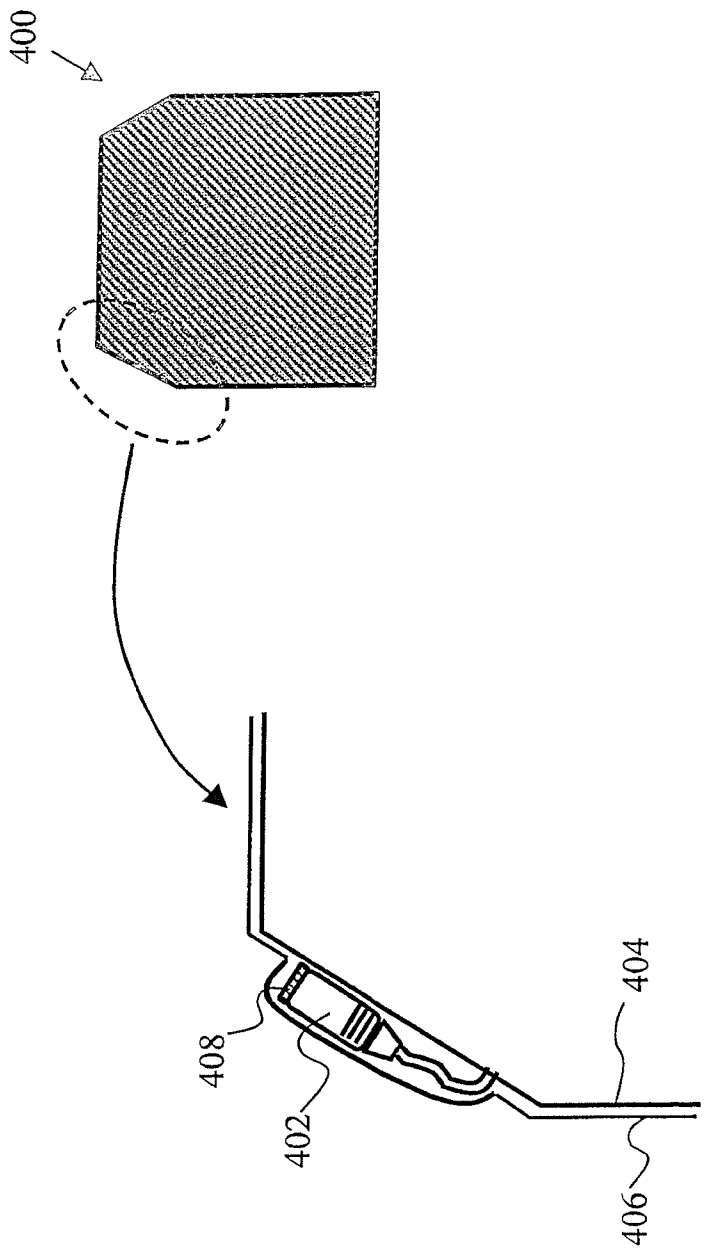

Figure 4

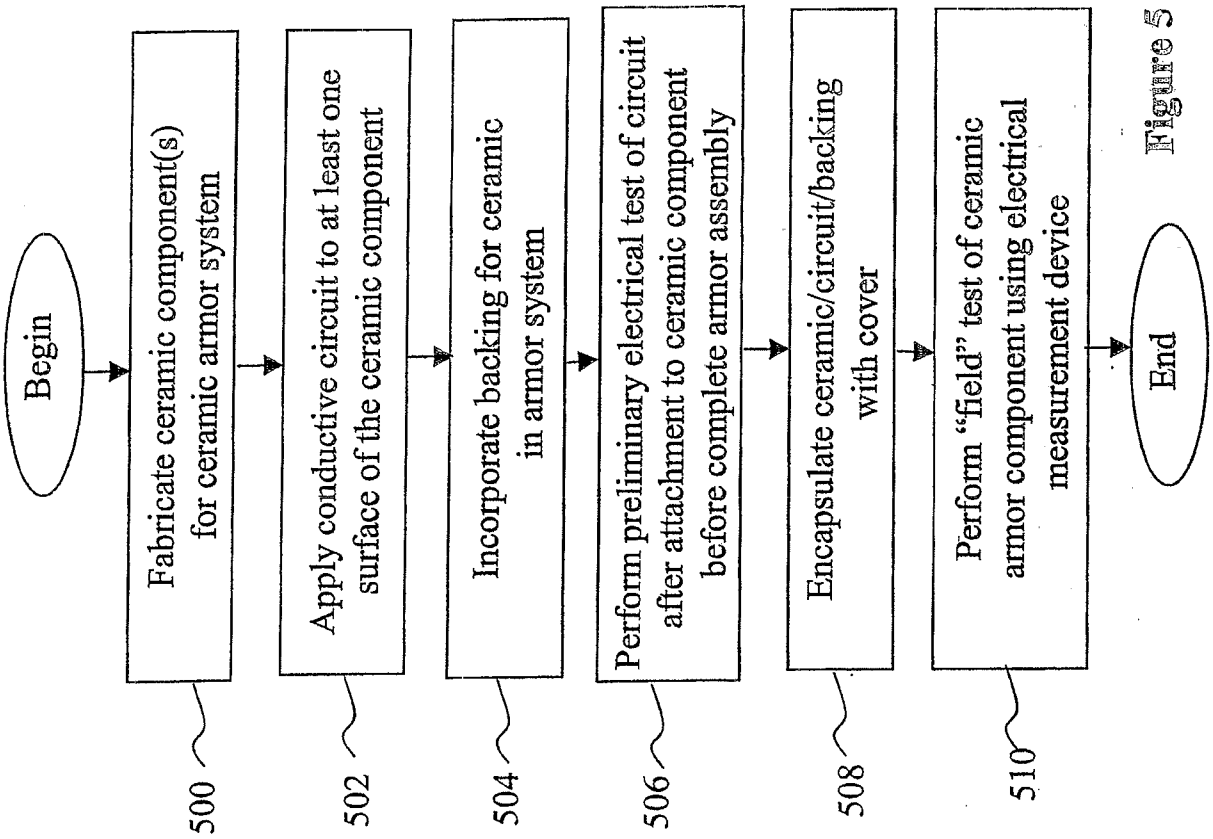
Begin
Fabricate ceramic component(s) for ceramic armor system
Apply conductive circuit to at least one surface of the ceramic component
Incorporate backing for ceramic in armor system
Perform preliminary electrical test of circuit after attachment to ceramic component before complete armor assembly
Encapsulate ceramic/circuit/backing with cover
Perform "field" test of ceramic armor component using electrical measurement device
End
500
502
504
506
508
510

Figure 5

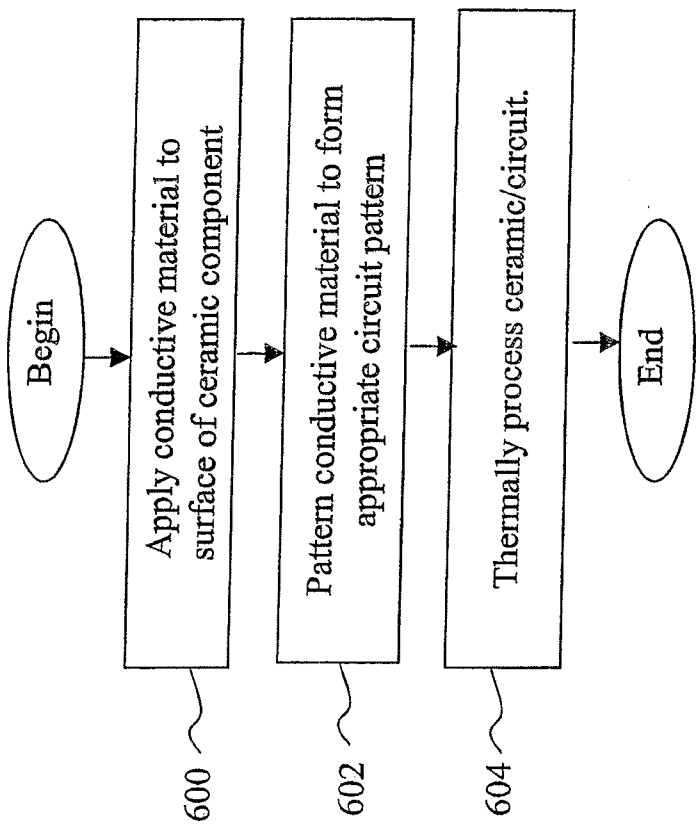
Begin
Apply conductive material to surface of ceramic component
Pattern conductive material to form appropriate circuit pattern
Thermally process ceramic/circuit.
End
600
602
604

Figure 6

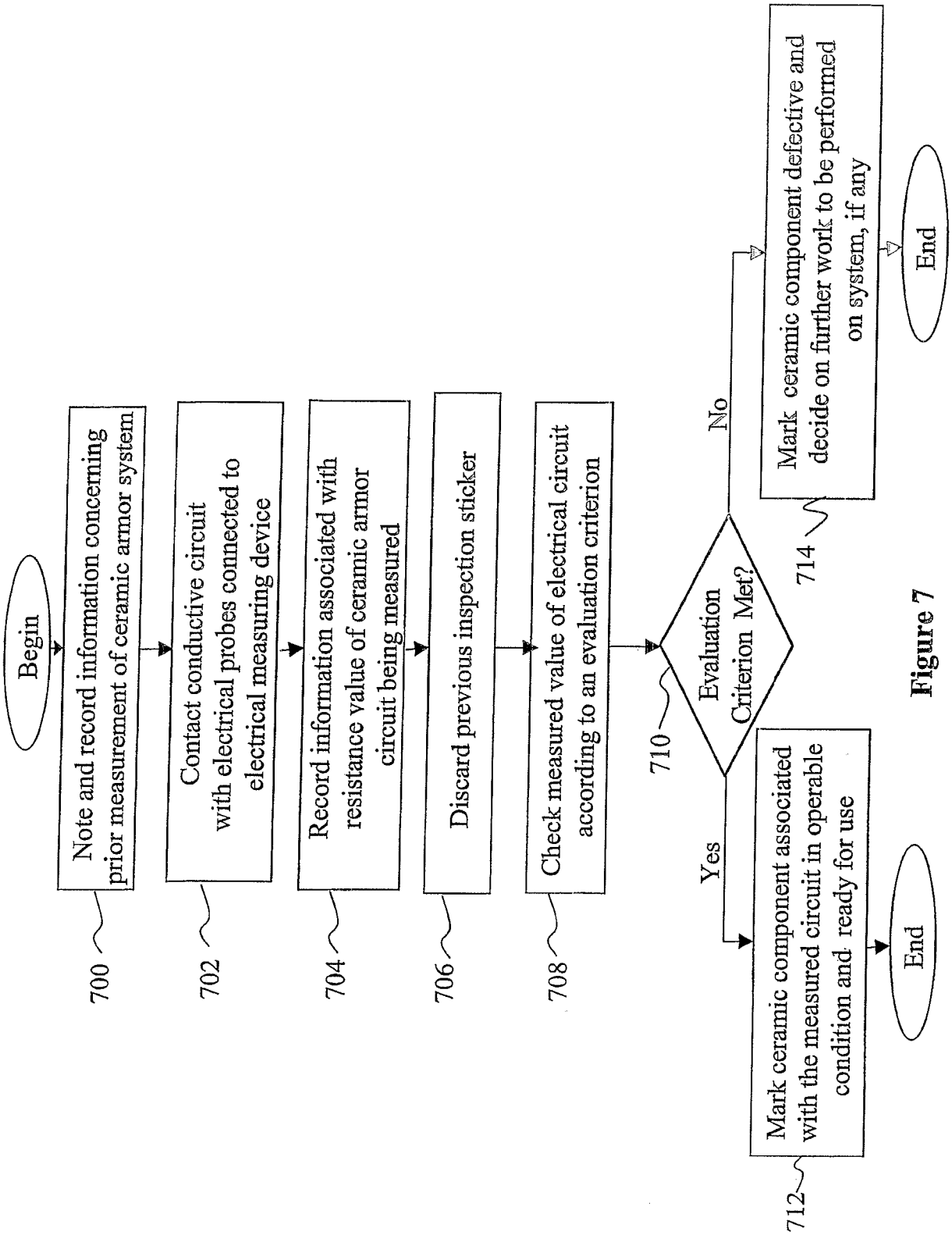
Begin
Note and record information concerning prior measurement of ceramic armor system
Contact conductive circuit with electrical probes connected to electrical measuring device
Record information associated with resistance value of ceramic armor circuit being measured
Discard previous inspection sticker
Check measured value of electrical circuit according to an evaluation criterion
Evaluation Criterion Met?
Yes
No
Mark ceramic component associated with the measured circuit in operable condition and ready for use
Mark ceramic component defective and decide on further work to be performed on system, if any
End
End
700
702
704
706
708
710
712
714

Figure 7

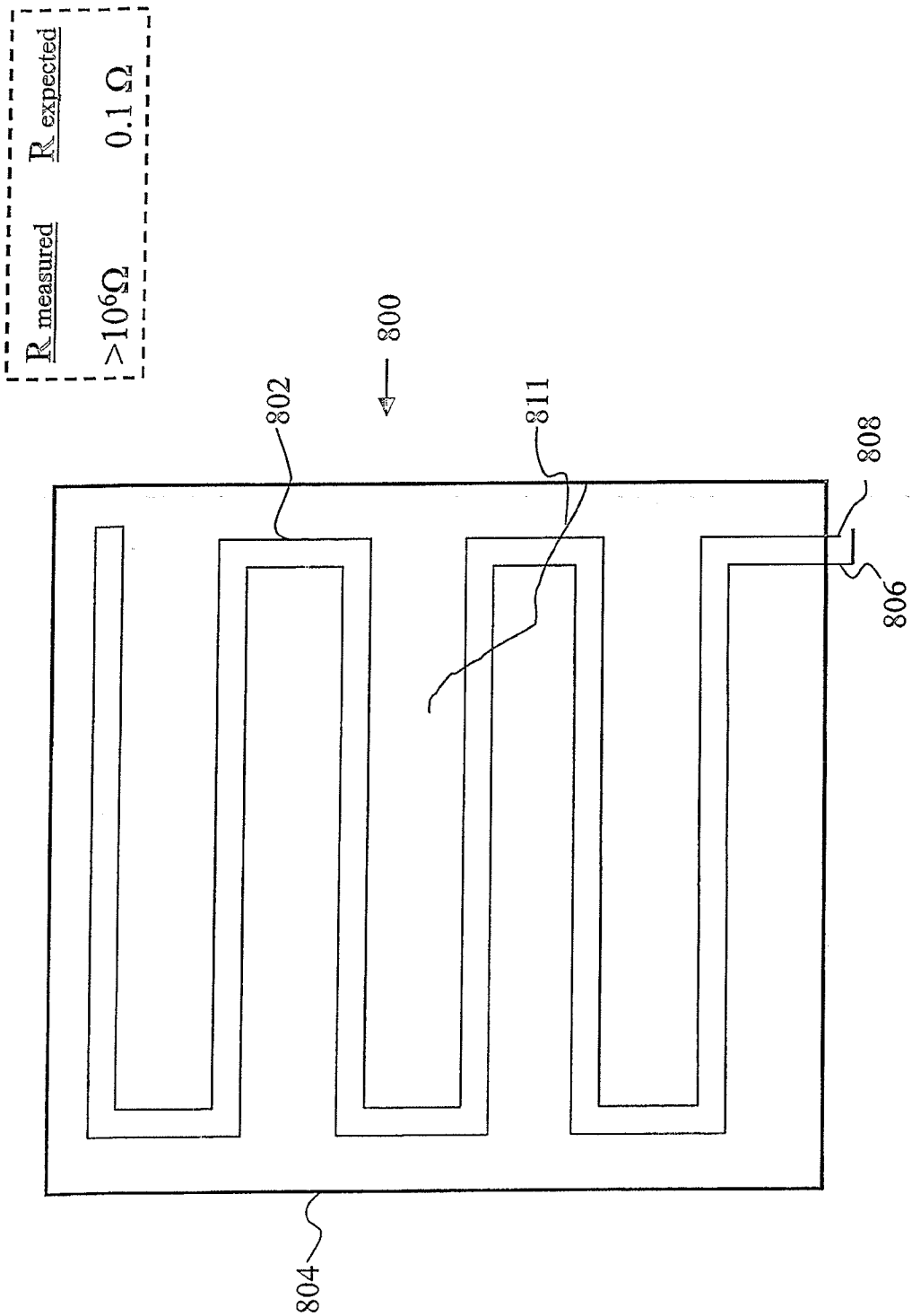

Figure 8a

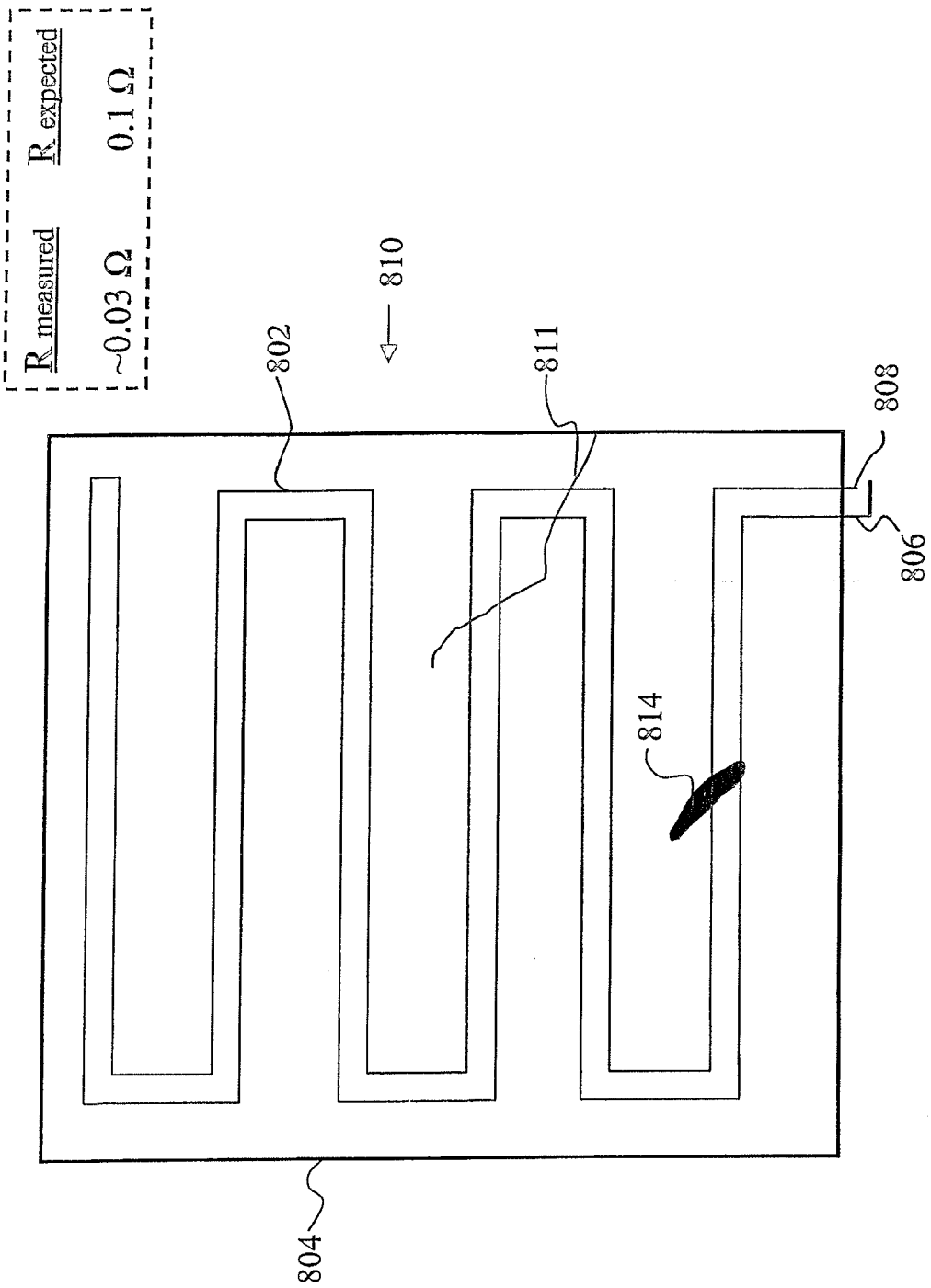

Figure 8b

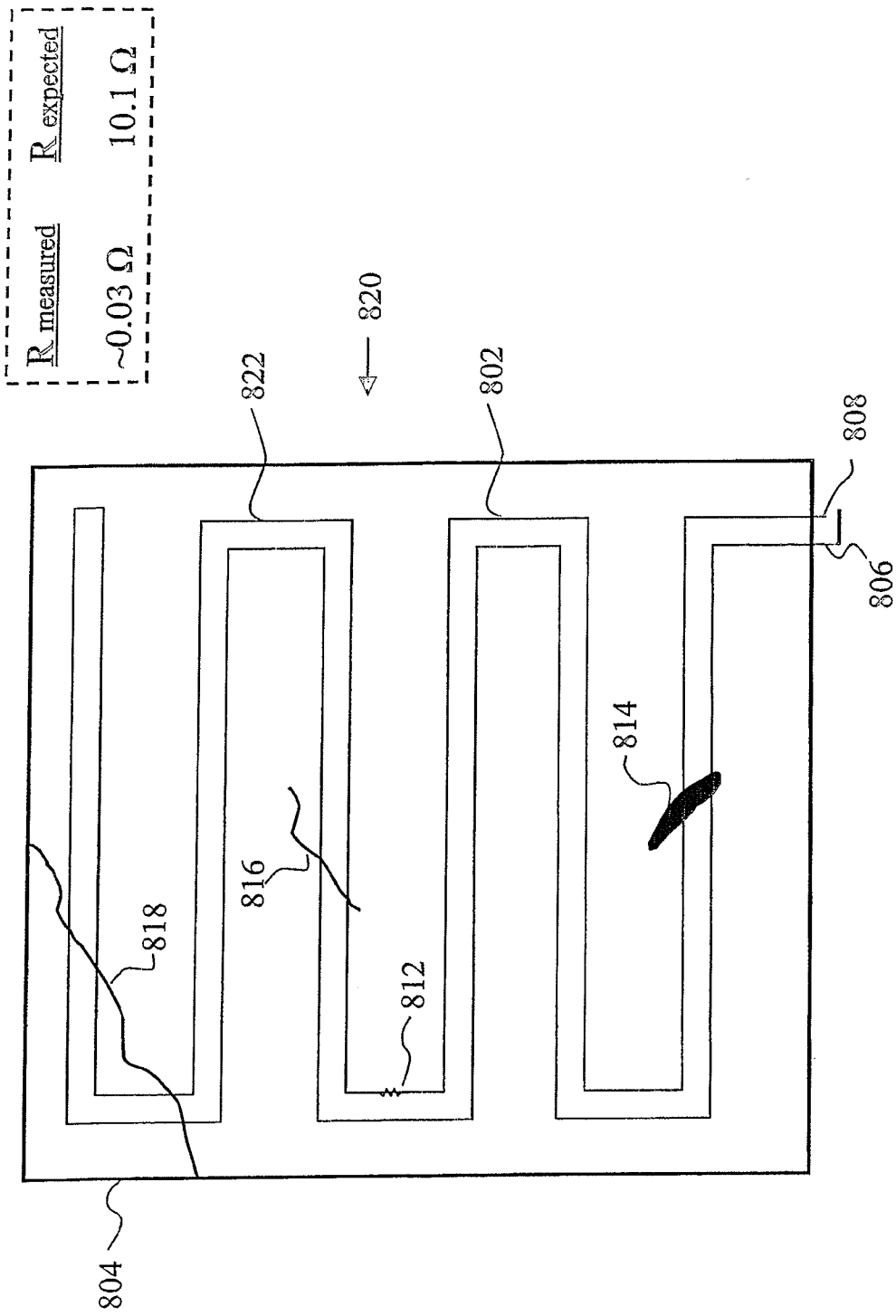
R measured
R expected
~0.03 Ω
10.1 Ω
820
822
802
808
806
814
816
818
812
804

Figure 8c

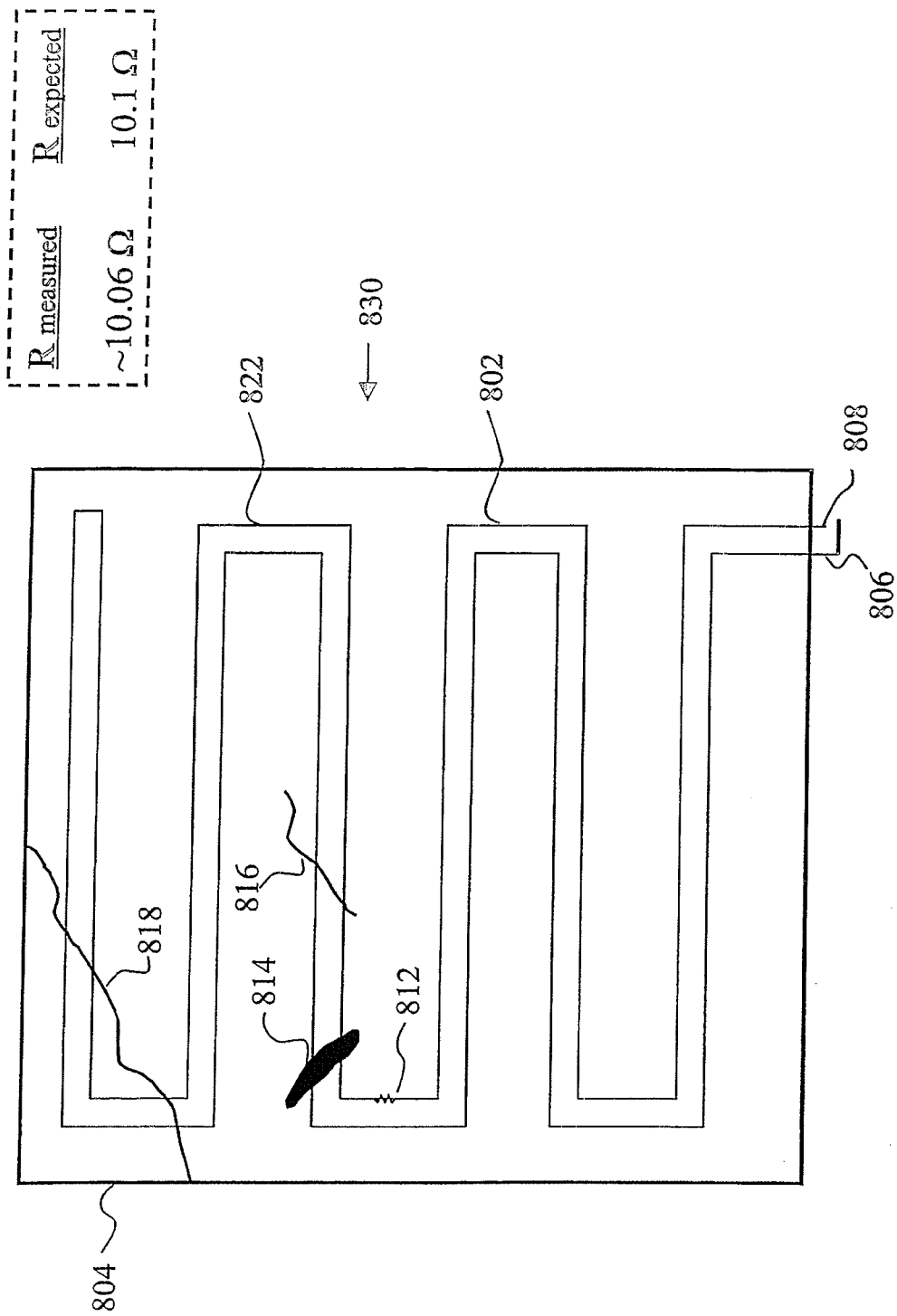
R measured
R expected
~10.06 Ω
10.1 Ω
830
822
802
808
806
804
818
816
814
812

Figure 8d

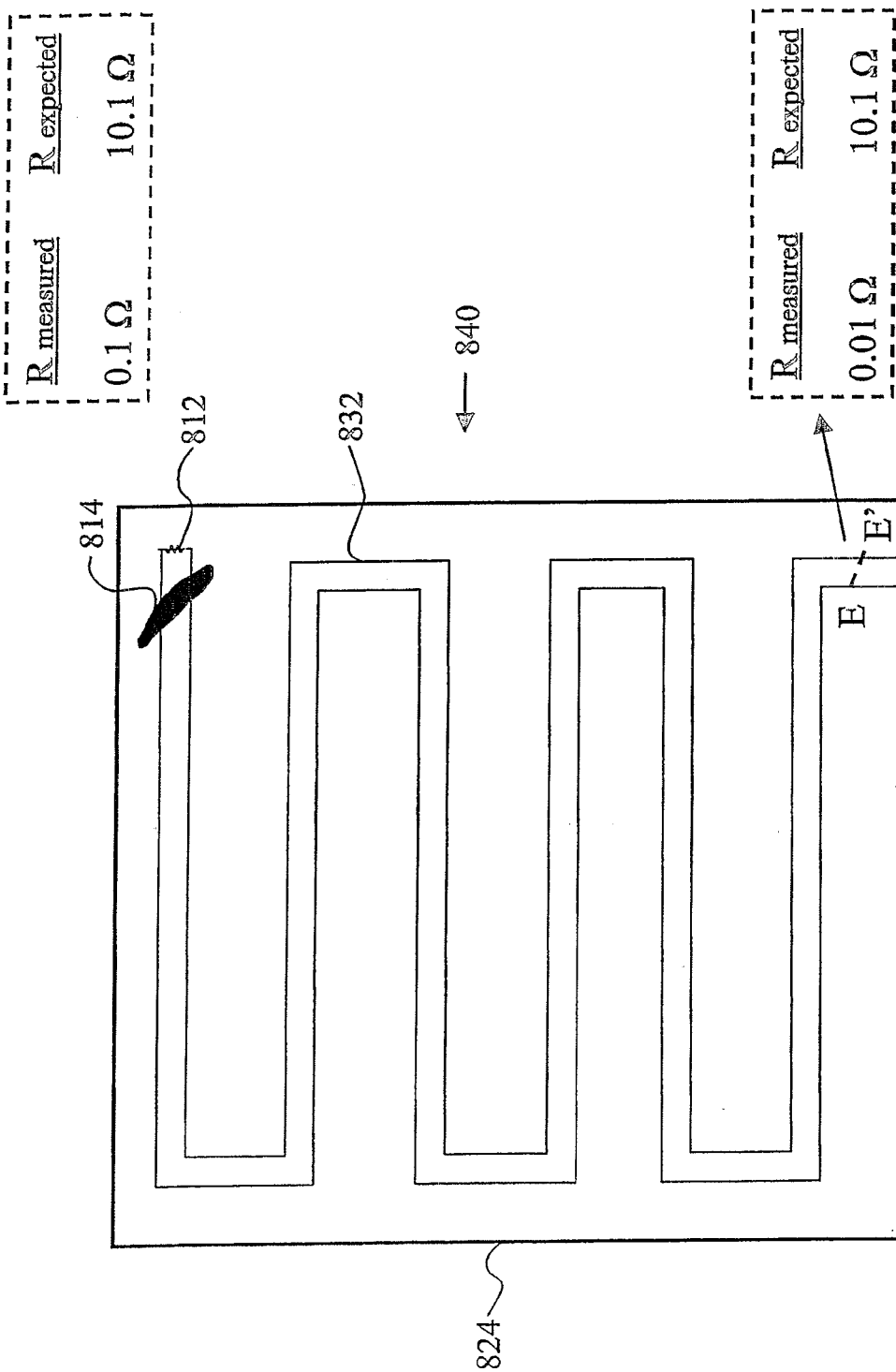
R measured
0.1 Ω
R expected
10.1 Ω
R measured
0.01 Ω
R expected
10.1 Ω
840
812
832
814
828
826
E
E'
824

Figure 8e

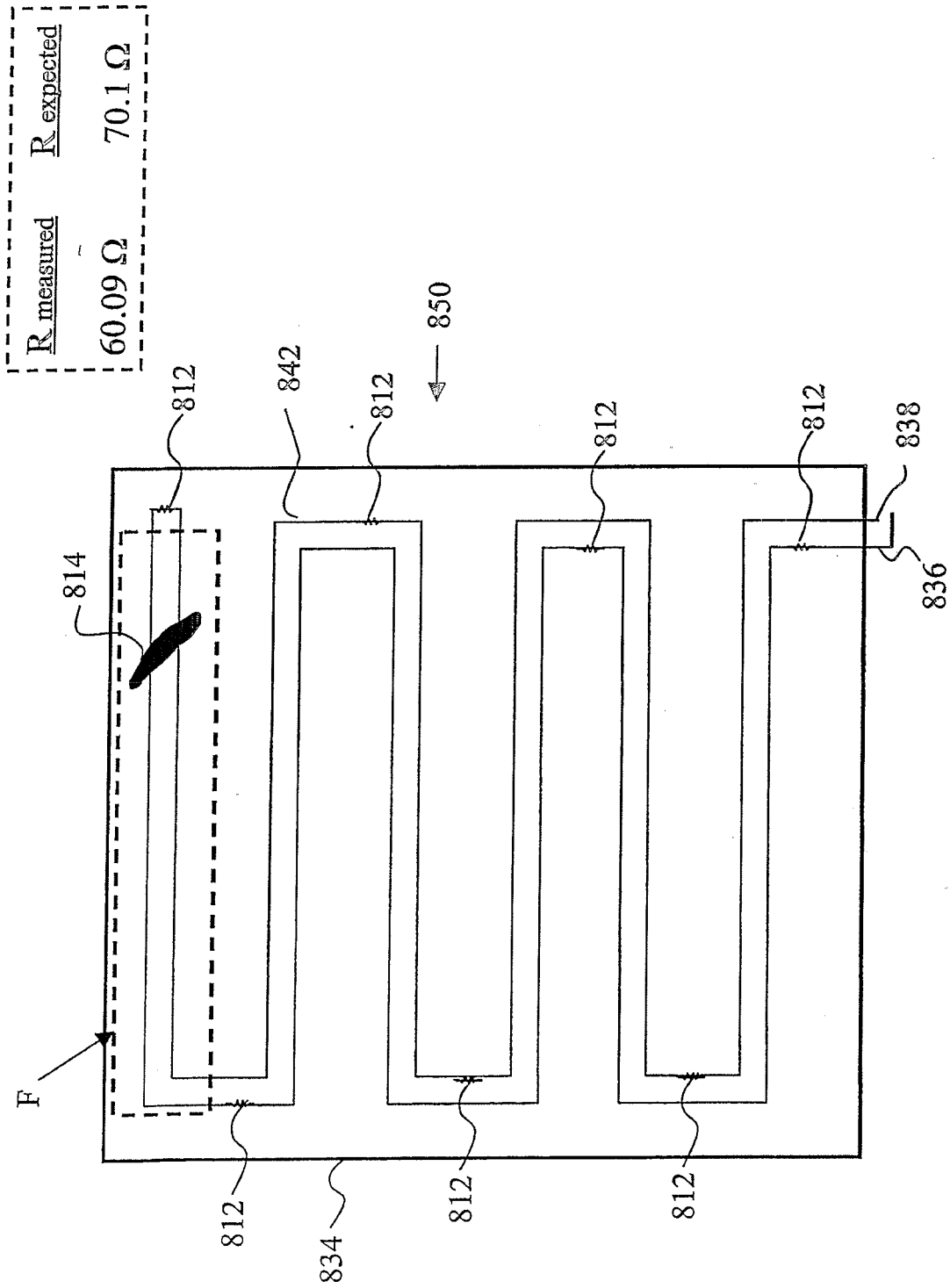
R measured
60.09 Ω
R expected
70.1 Ω
850
812
842
812
812
812
838
836
814
F
812
834
812
812

Figure 8f

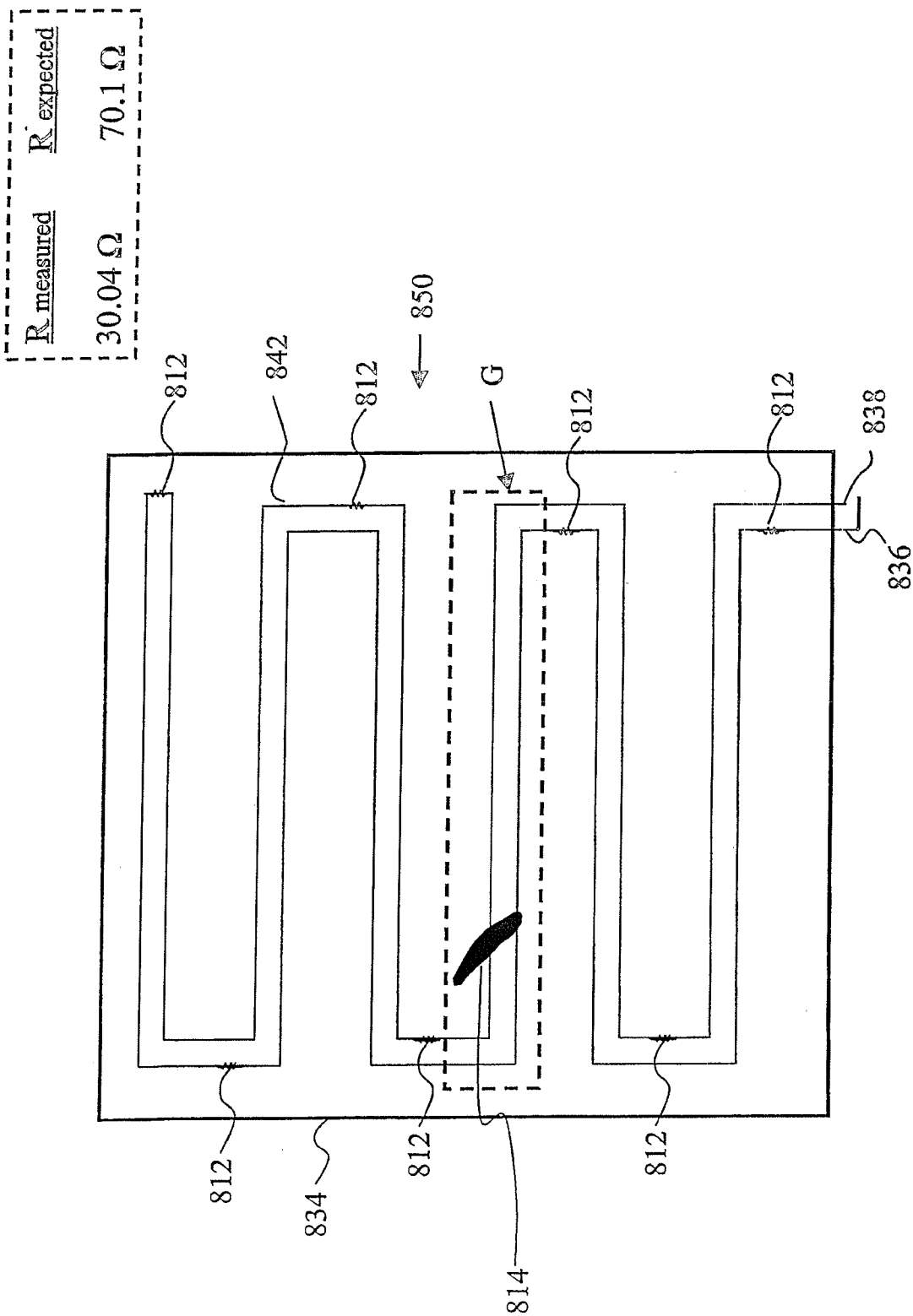
R measured
R expected
30.04 Ω
70.1 Ω
812
842
812
850
G
812
812
838
836
812
834
812
814
812

Figure 8g

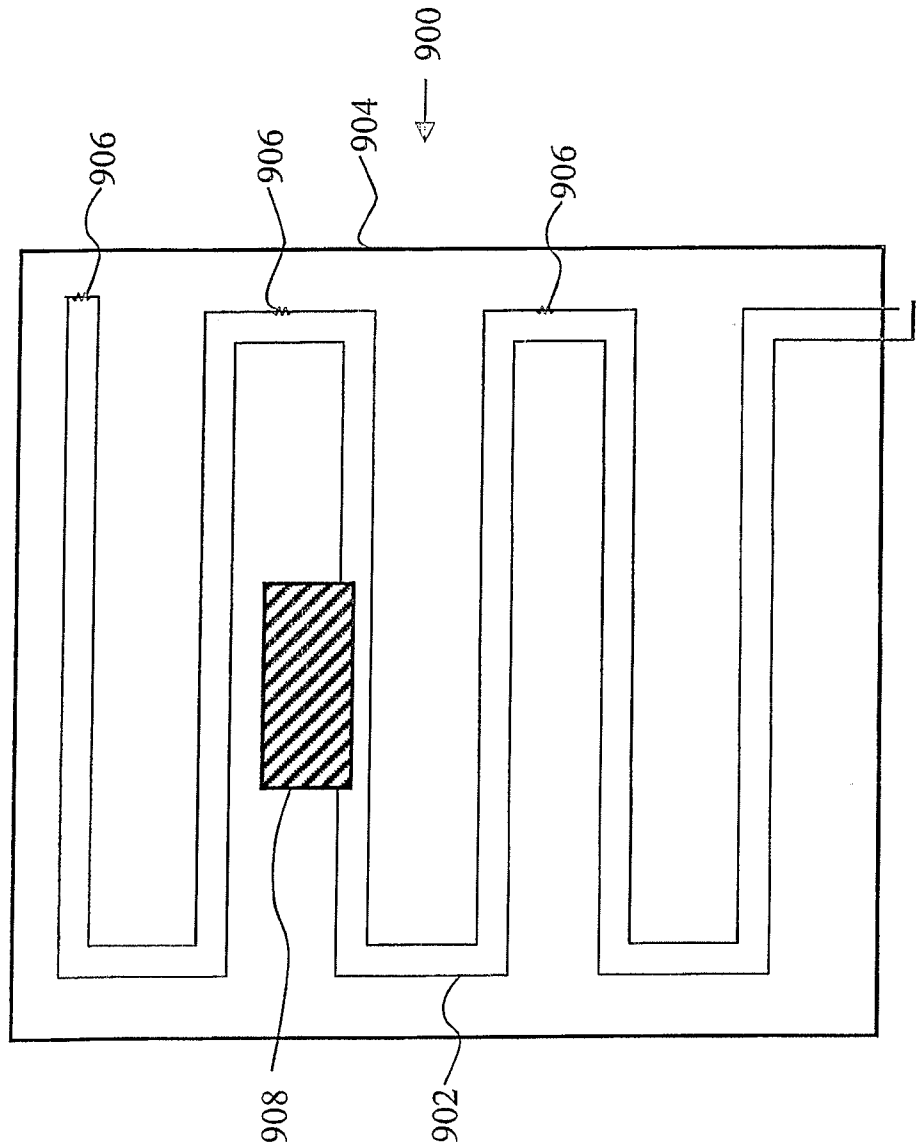

Figure 9