FIG. 1

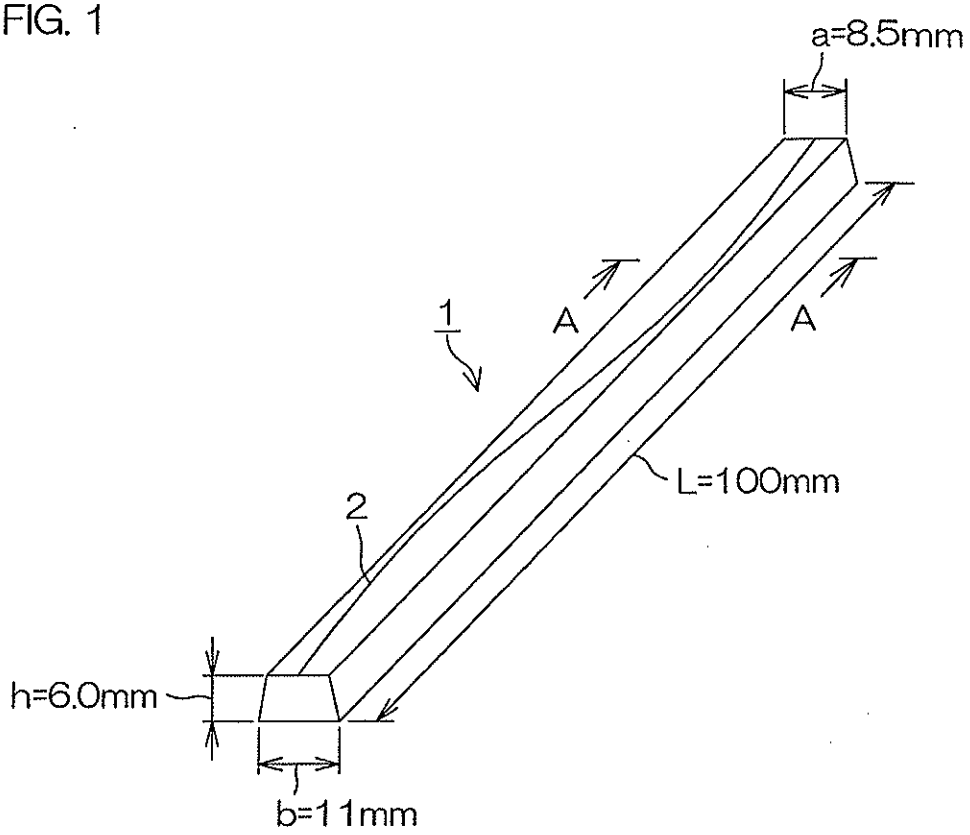

FIG. 2

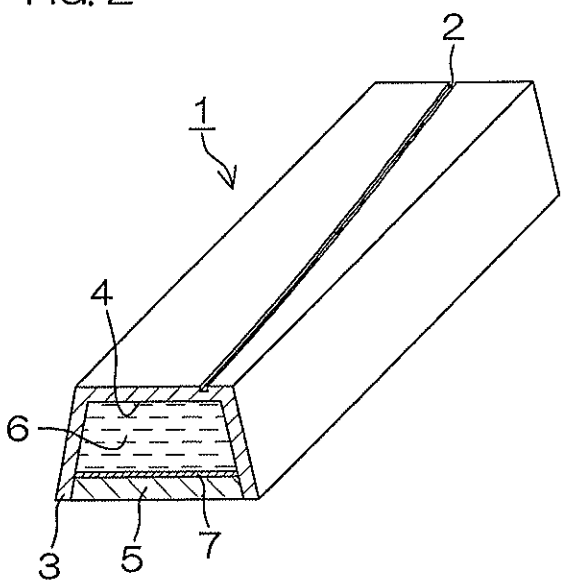

FIG. 3A

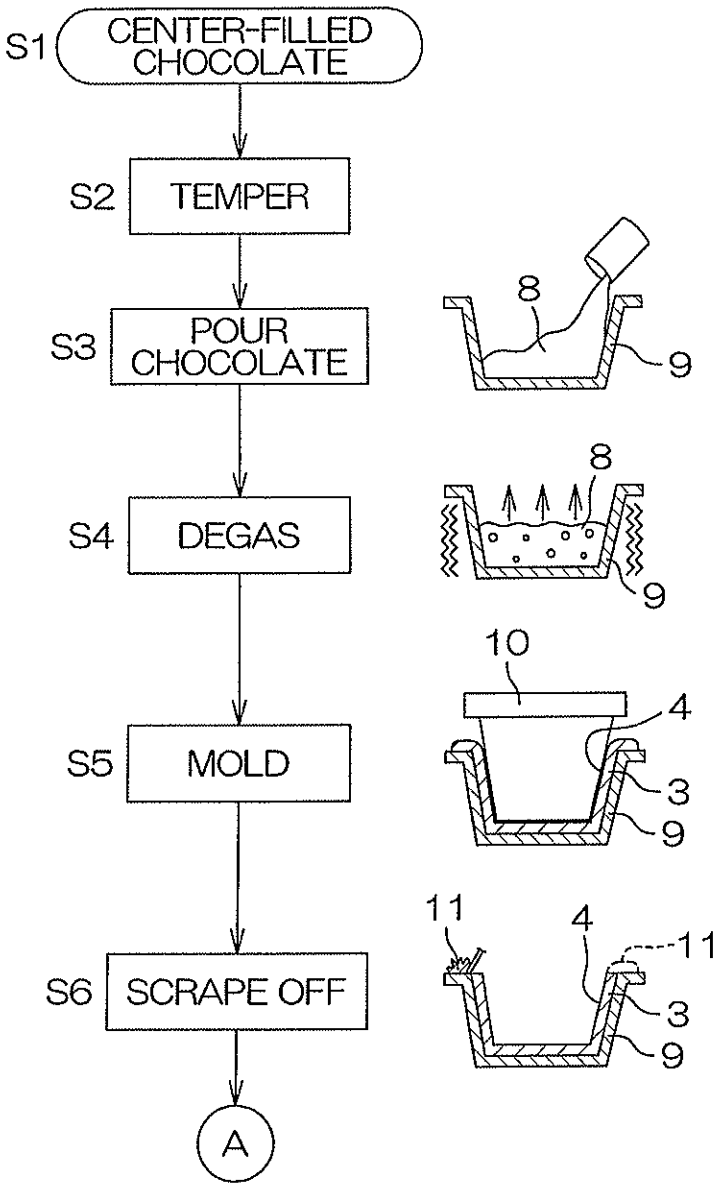
S1
CENTER-FILLED CHOCOLATE
S2
TEMPER
S3
POUR CHOCOLATE
S4
DEGAS
S5
MOLD
S6
SCRAPE OFF
A
8
9
8
9
10
4
3
9
11
4
11
3
9

FIG. 3B

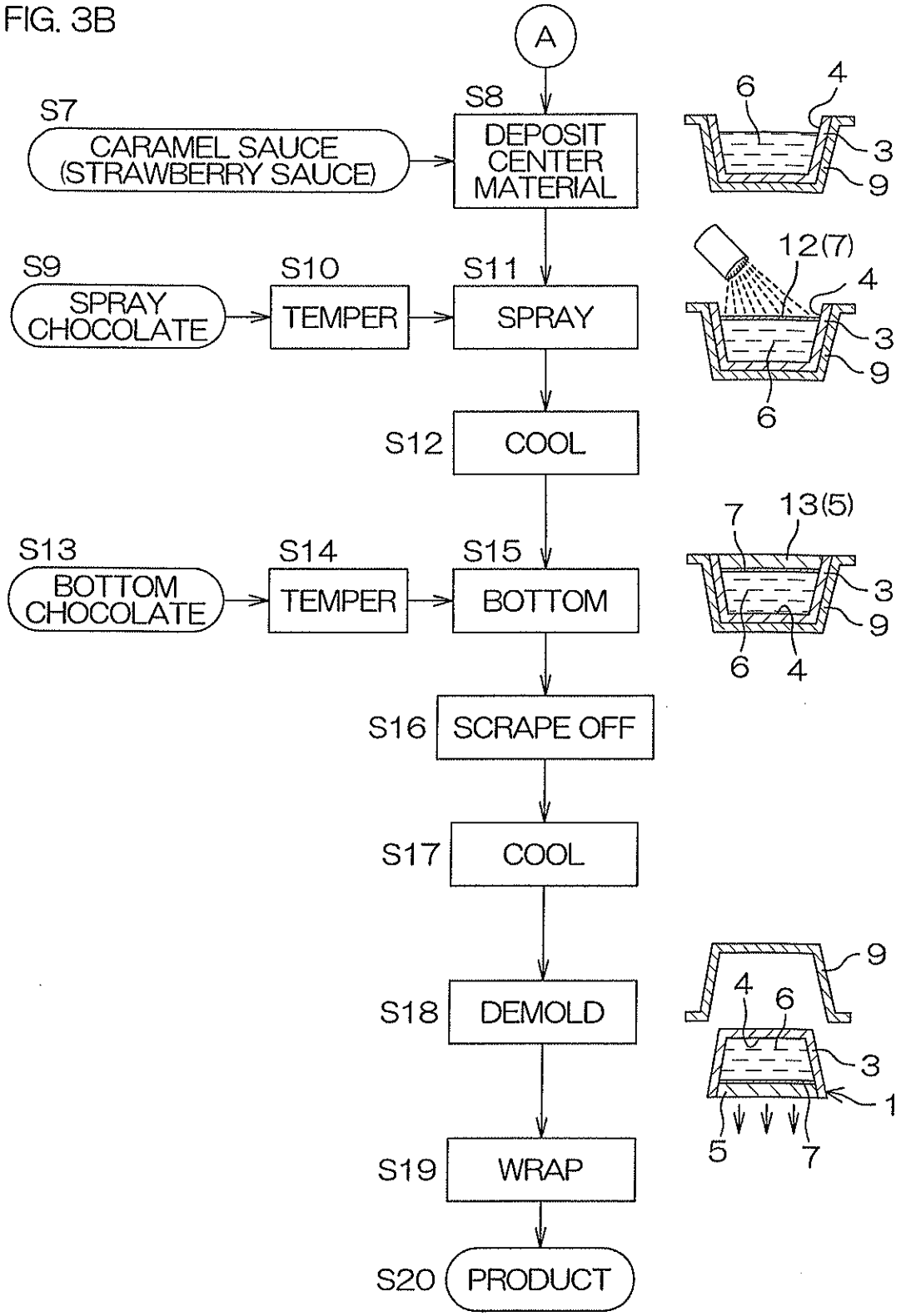
A
S7
CARAMEL SAUCE
(STRAWBERRY SAUCE)
S8
DEPOSIT
CENTER
MATERIAL
S9
SPRAY
CHOCOLATE
S10
TEMPER
S11
SPRAY
S12
COOL
S13
BOTTOM
CHOCOLATE
S14
TEMPER
S15
BOTTOM
S16
SCRAPE OFF
S17
COOL
S18
DEMOLD
S19
WRAP
S20
PRODUCT
6
4
3
9
12(7)
4
3
9
6
7
13(5)
3
9
6
4
9
4
6
3
1
5
7