FIG. 1

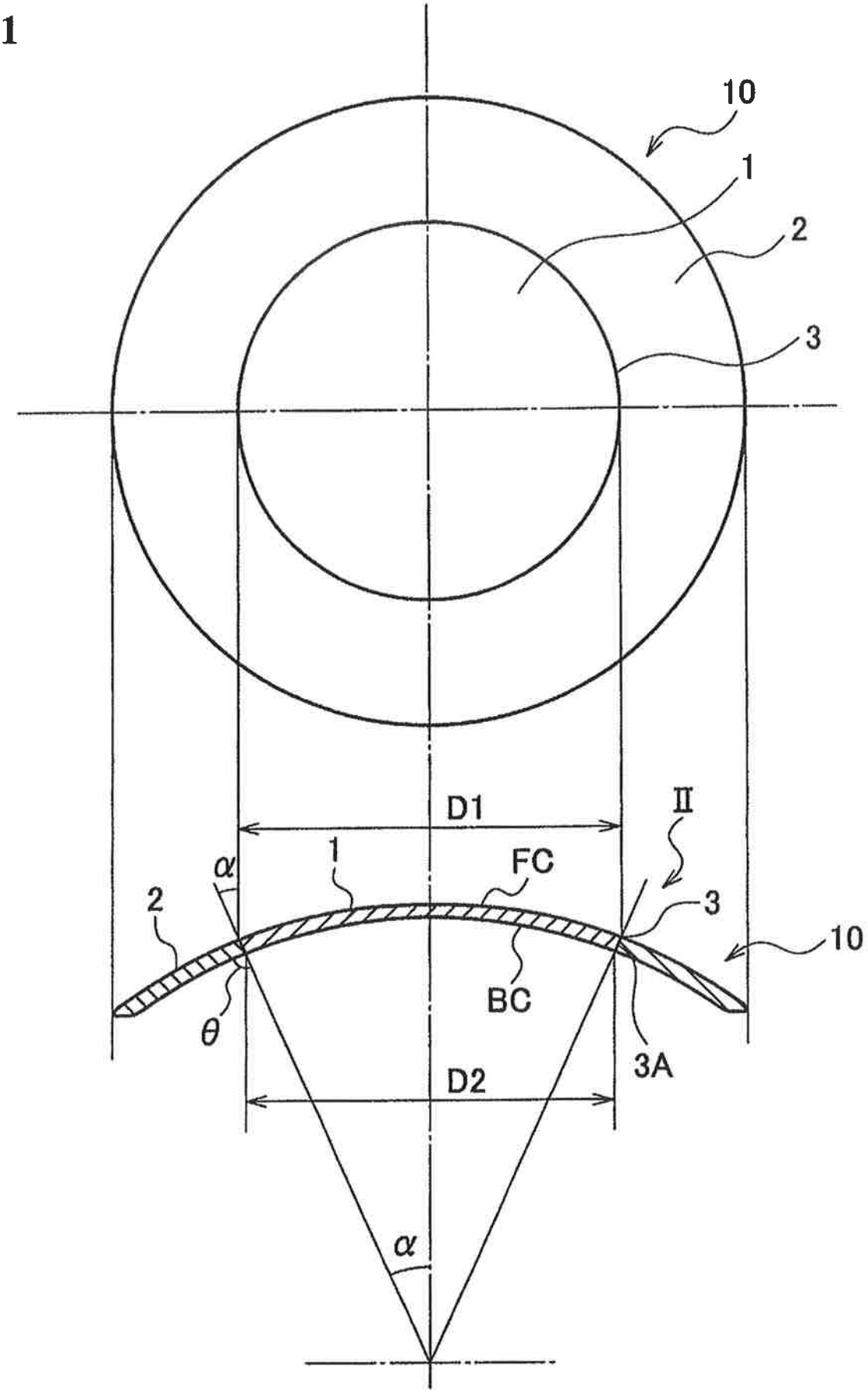

FIG. 2

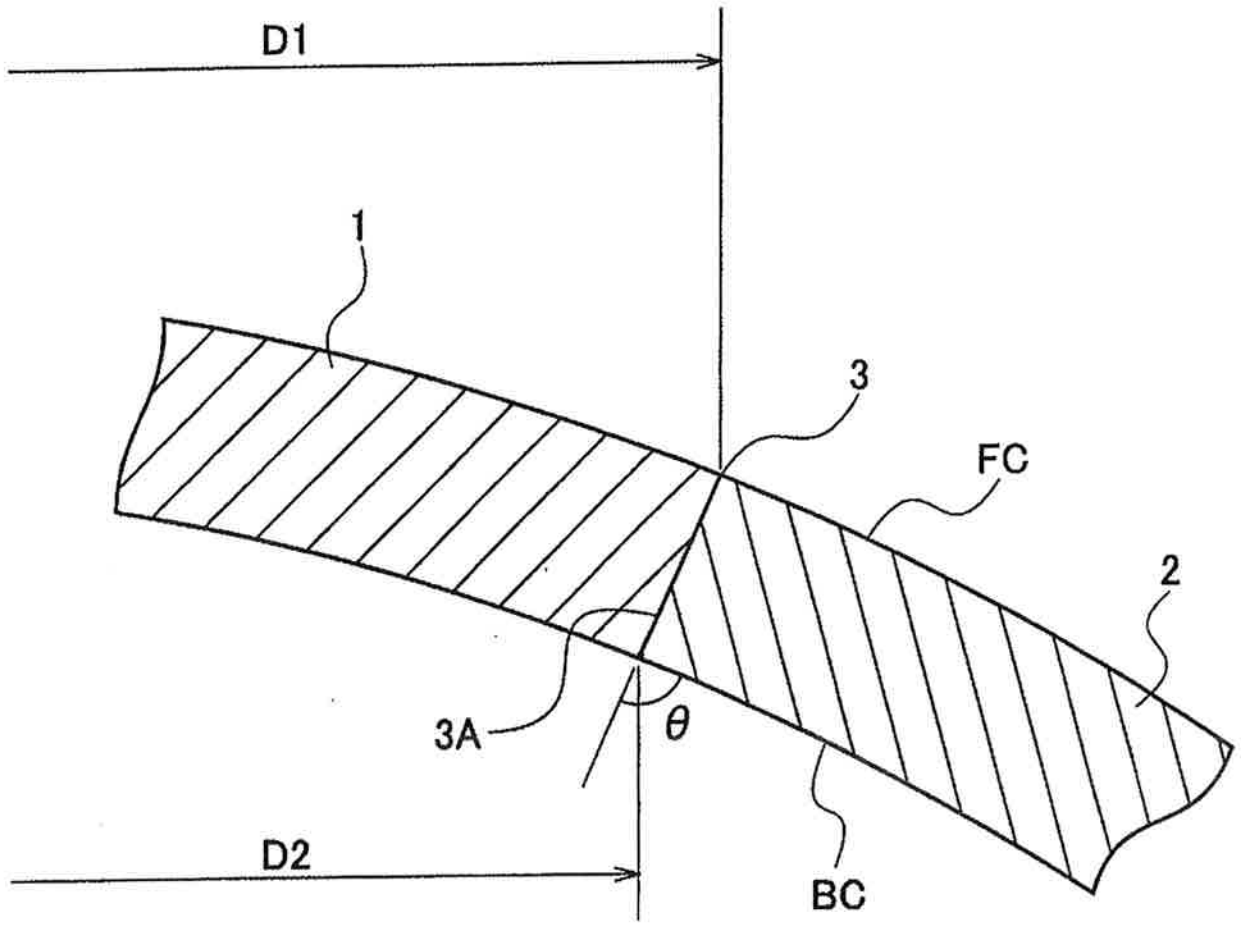

FIG. 3

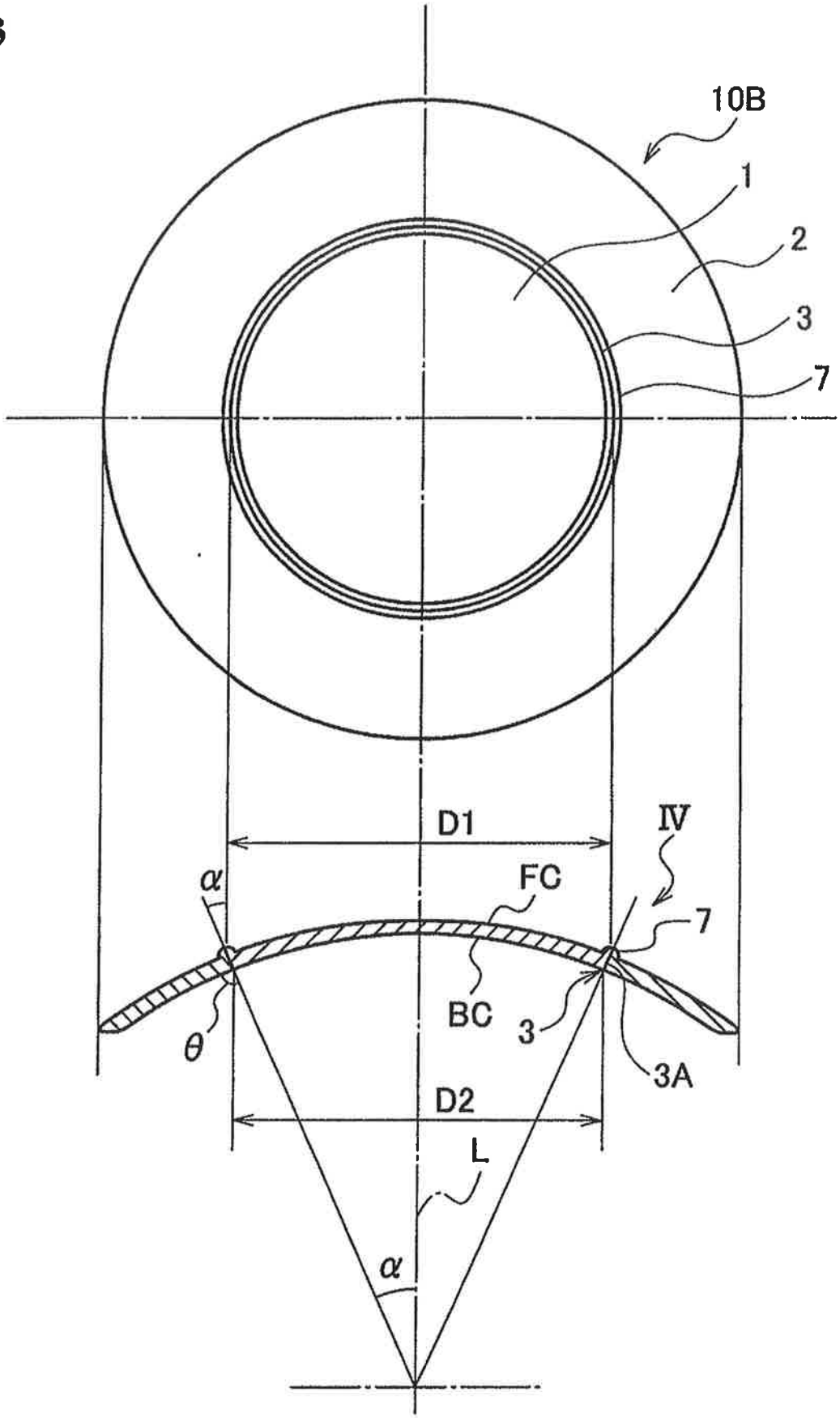

FIG. 4

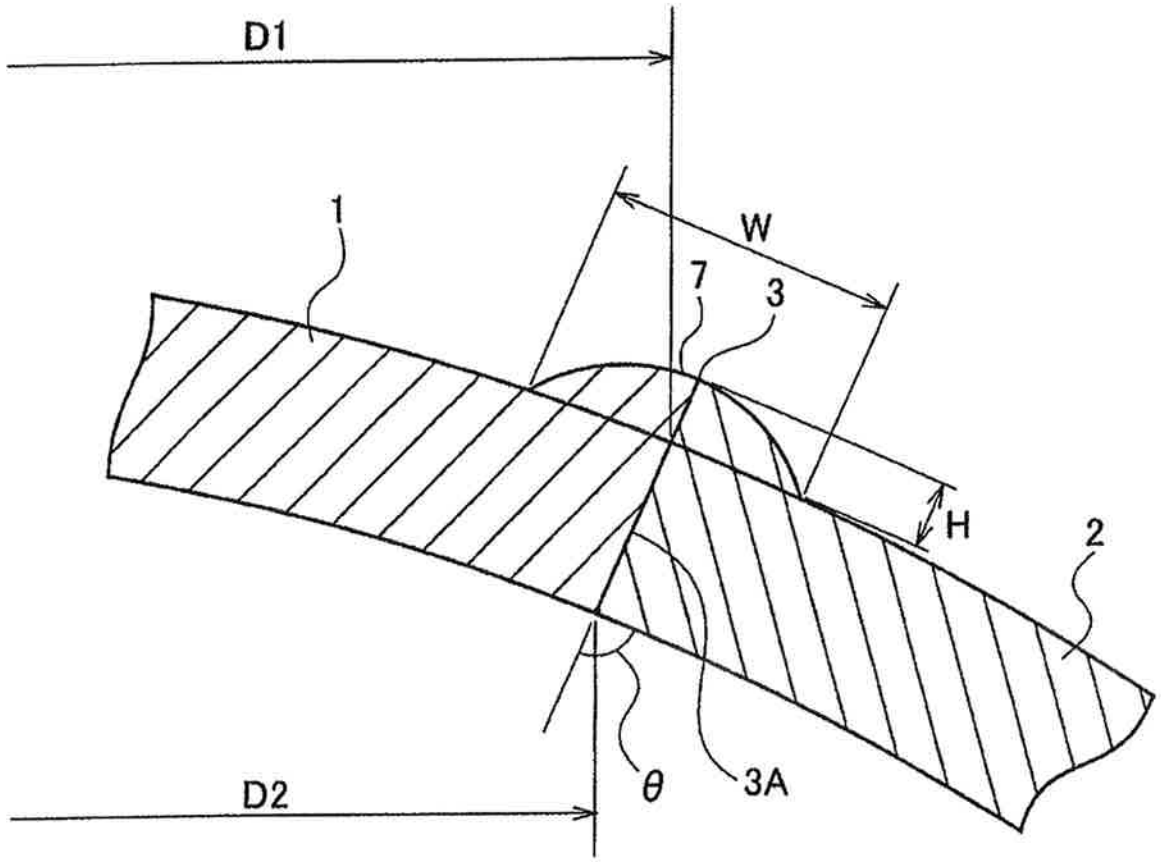

FIG. 5

(a)

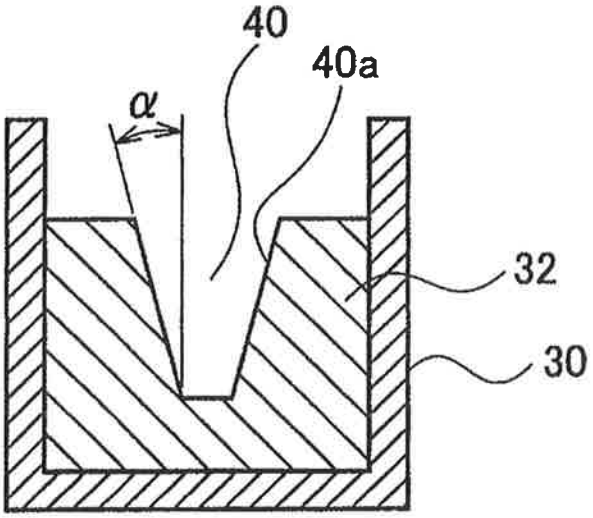

(b)

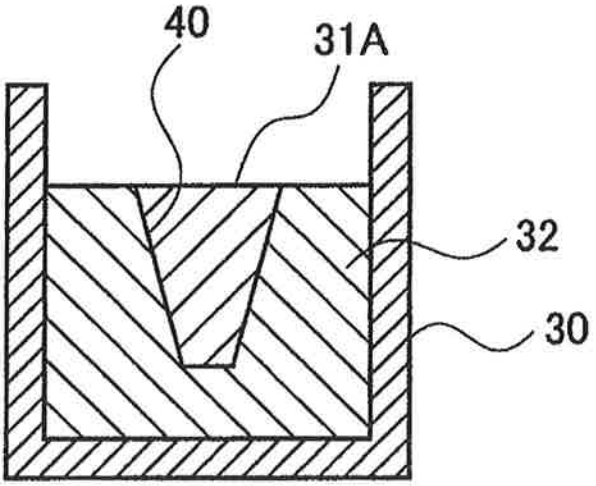

(c)

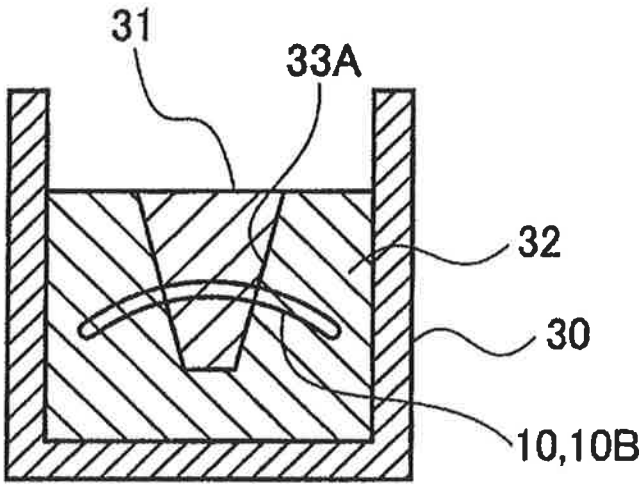

FIG. 6

(a)

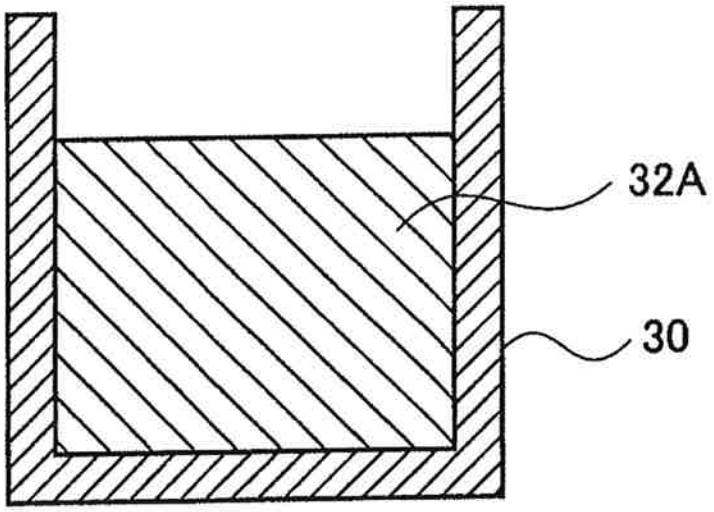

(b)

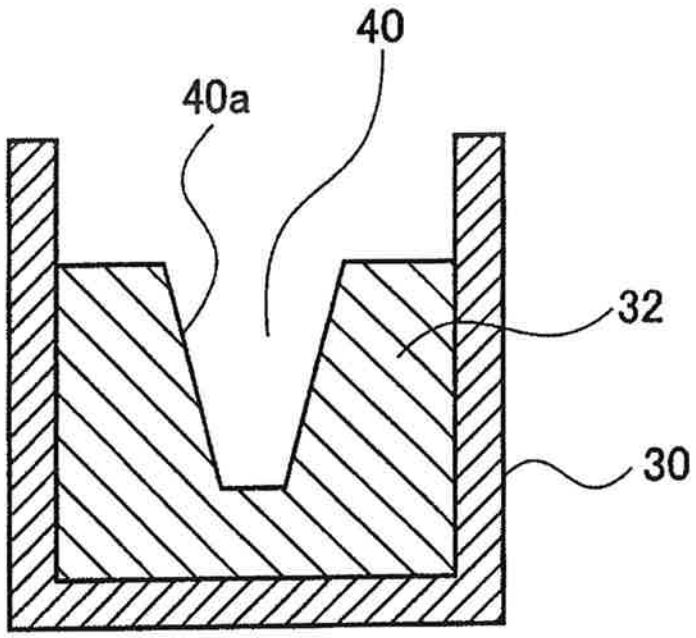

FIG. 7

(a)

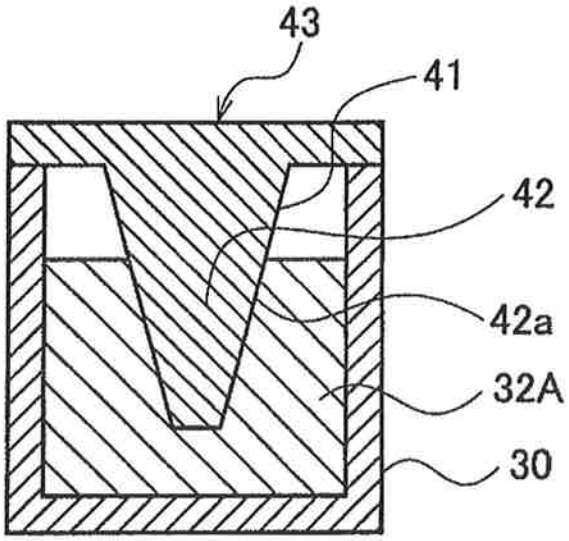

(b)

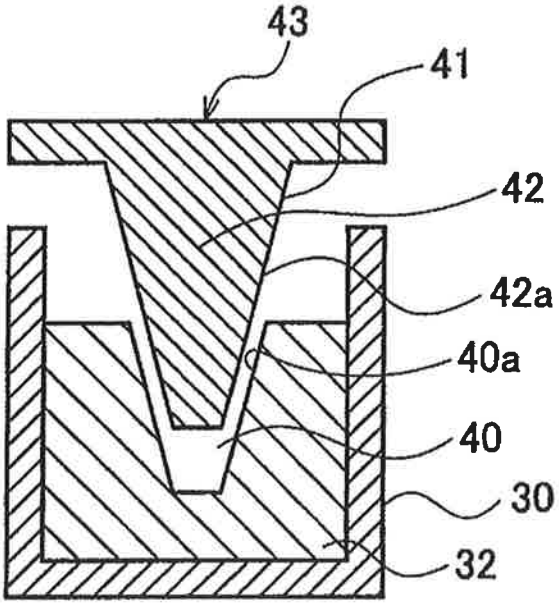

(c)

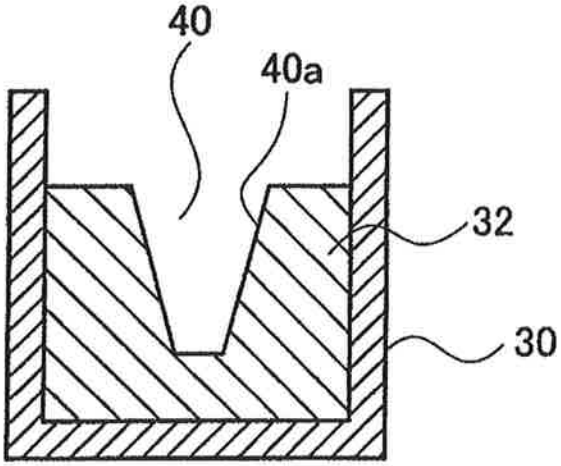

FIG. 8

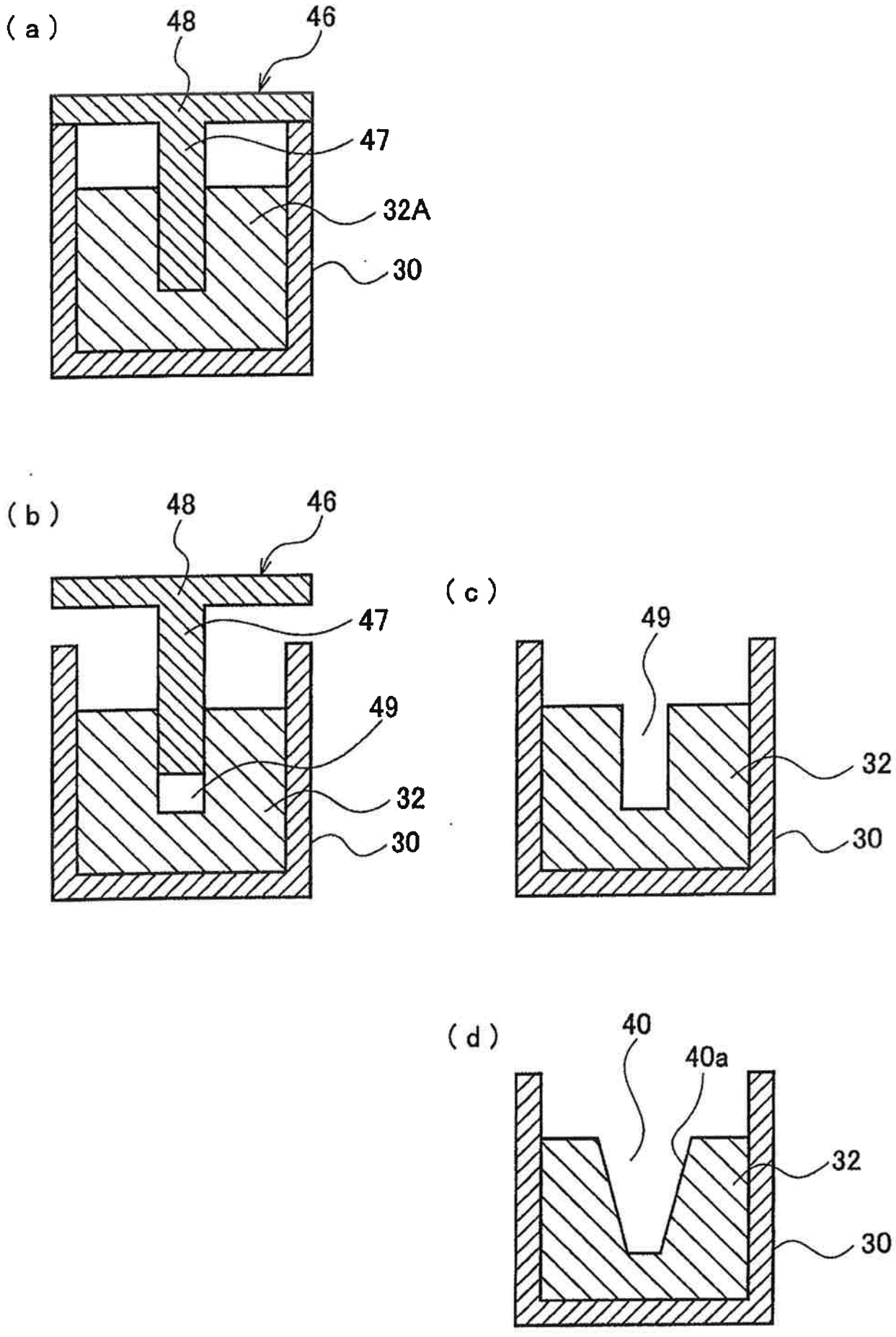

FIG. 9

(a)

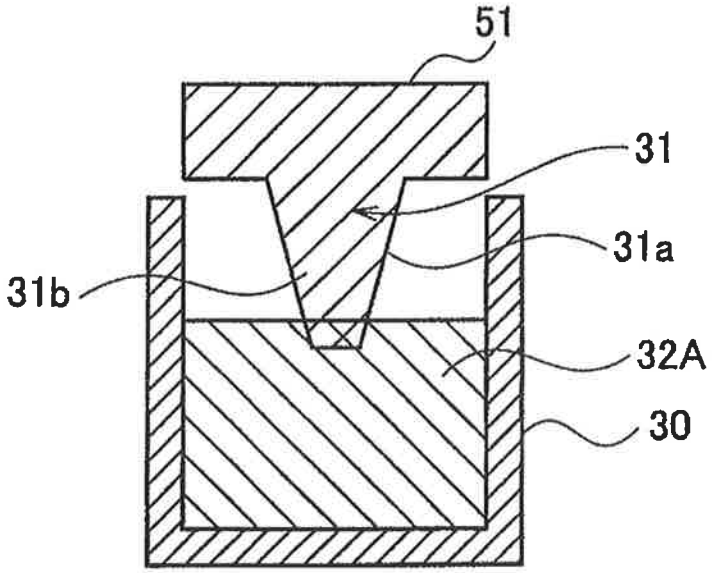

(b)

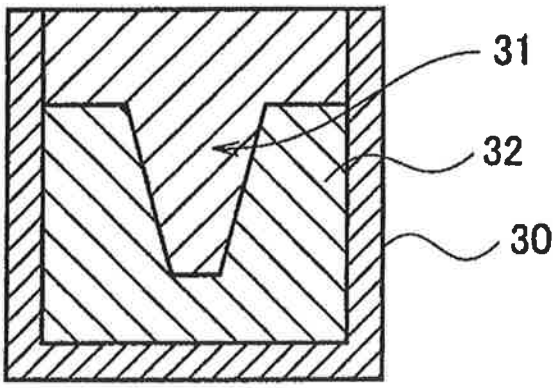

(c)

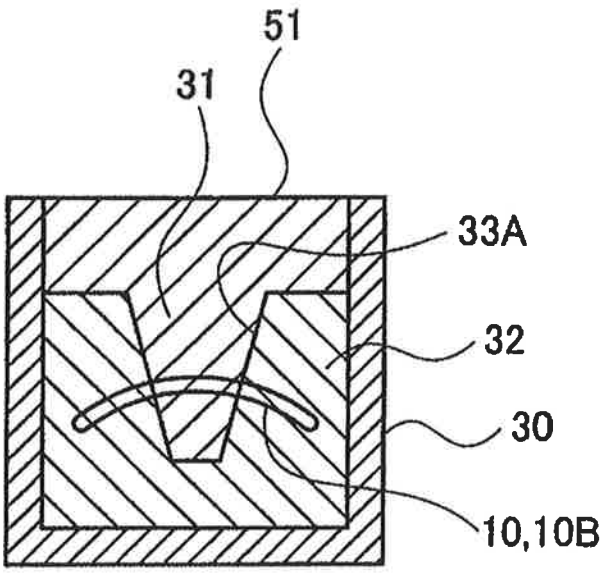

FIG. 10

(a)

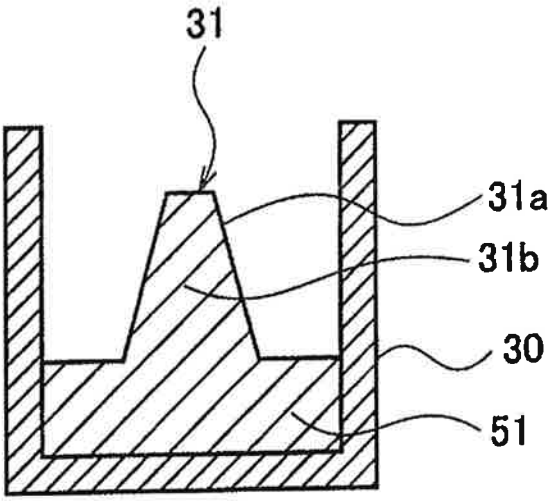

(b)

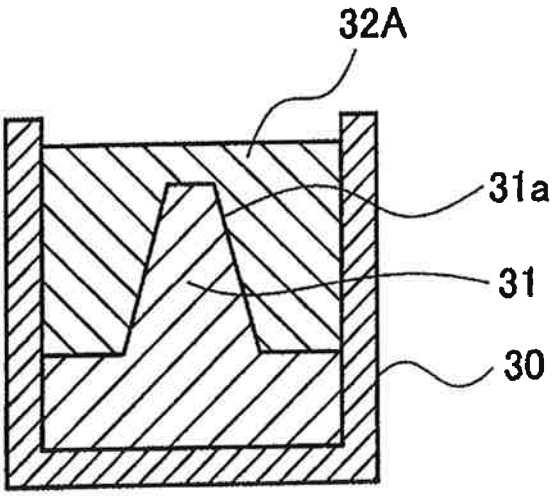

(c)

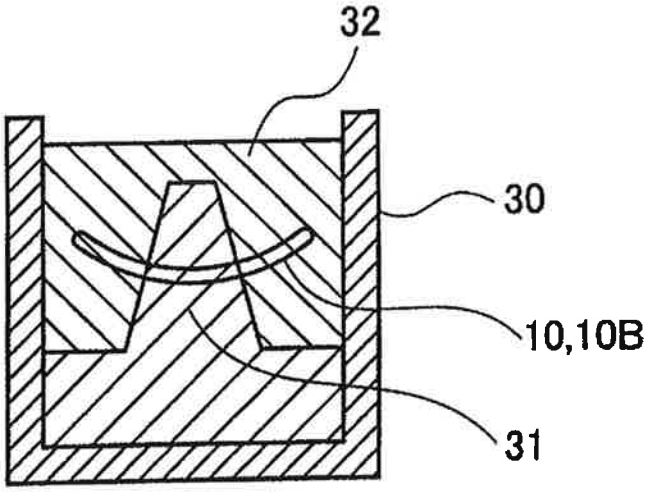

FIG. 11

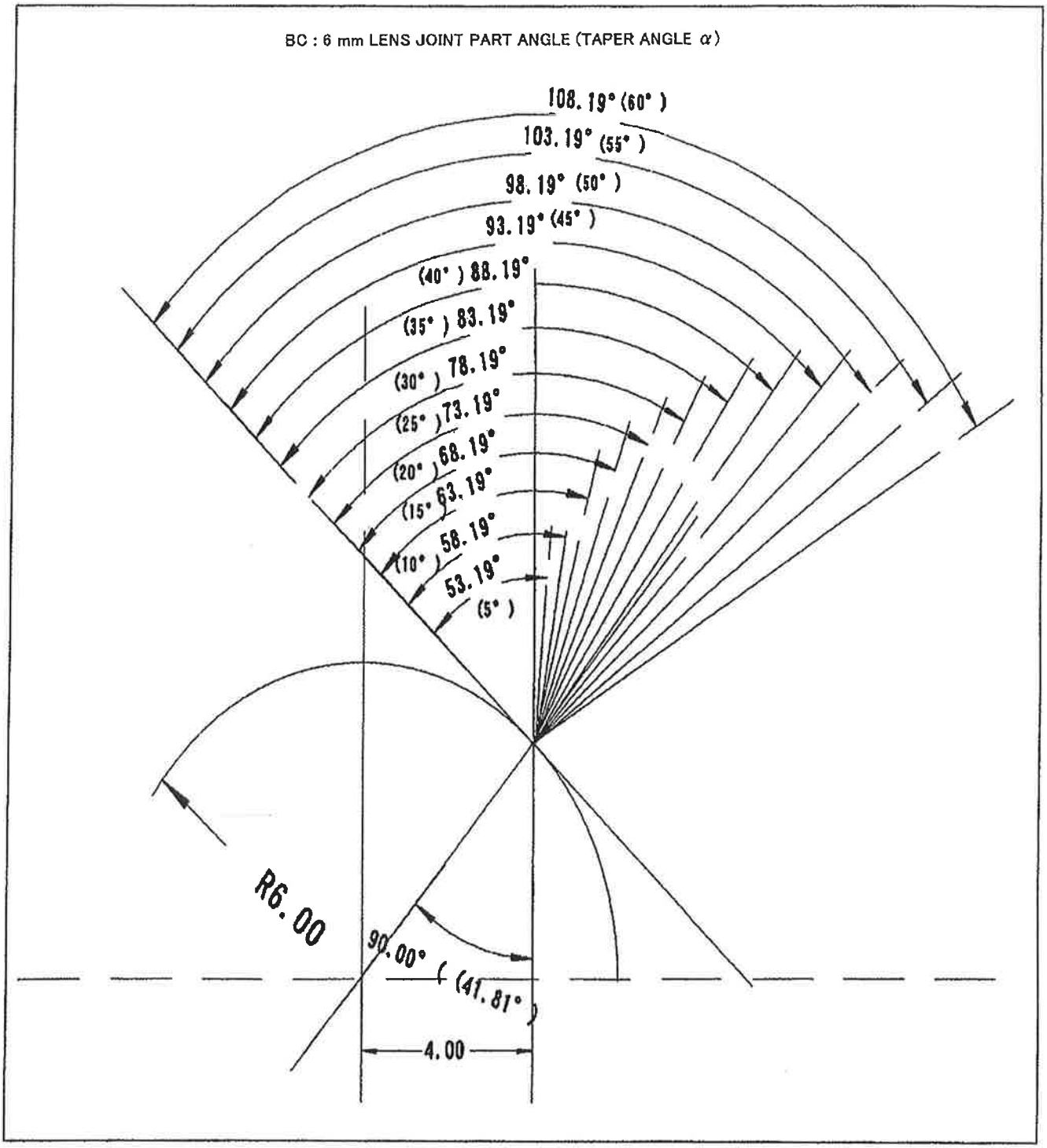
BC : 6 mm LENS JOINT PART ANGLE (TAPER ANGLE α)
108.19° (60°)
103.19° (55°)
98.19° (50°)
93.19° (45°)
(40°) 88.19°
(35°) 83.19°
(30°) 78.19°
(25°) 73.19°
(20°) 68.19°
(15°) 63.19°
(10°) 58.19°
53.19°
(5°)
R6.00
90.00°
(41.81°)
4.00

FIG. 12

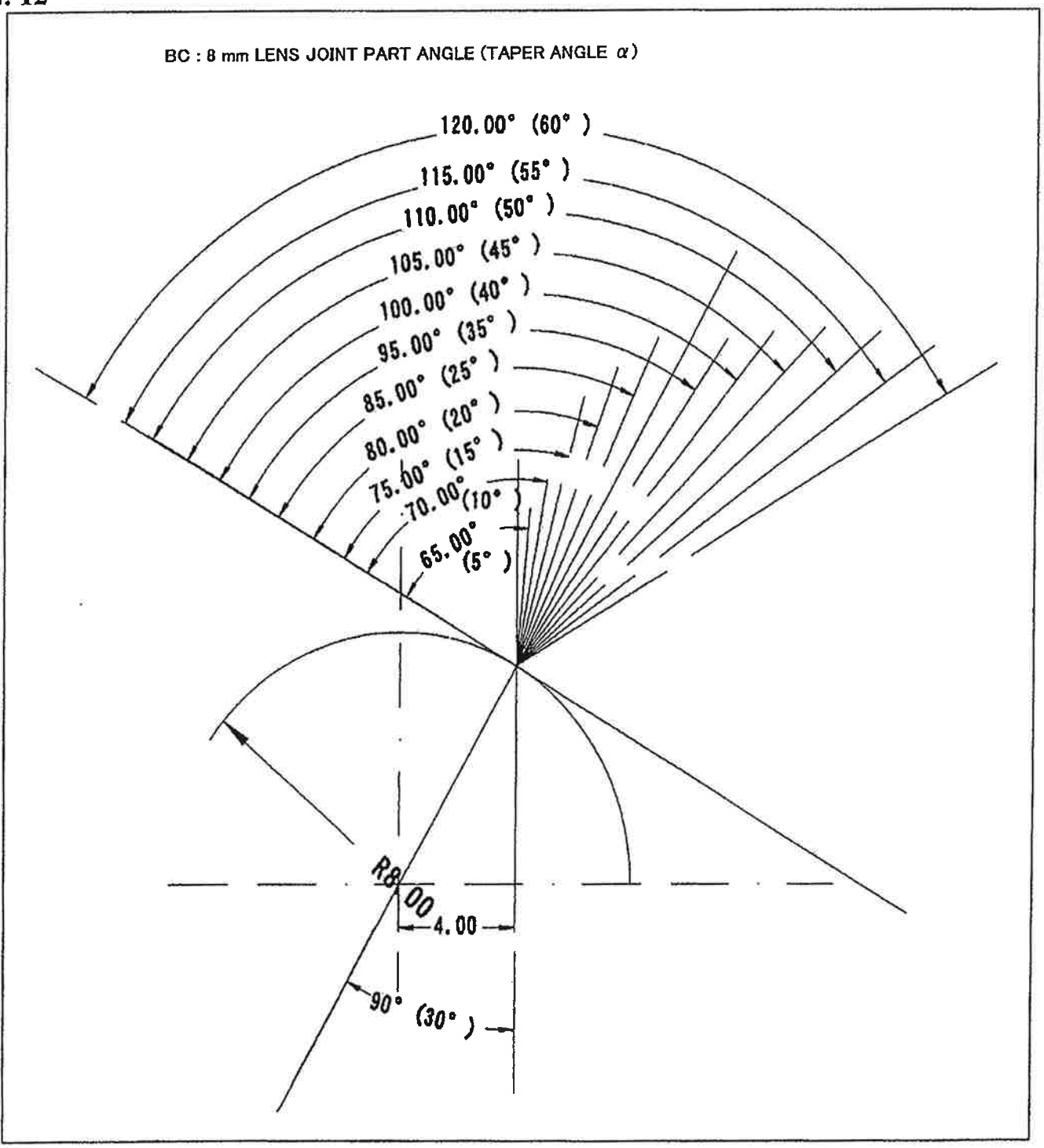
BC : 8 mm LENS JOINT PART ANGLE (TAPER ANGLE α)
120.00° (60°)
115.00° (55°)
110.00° (50°)
105.00° (45°)
100.00° (40°)
95.00° (35°)
85.00° (25°)
80.00° (20°)
75.00° (15°)
70.00° (10°)
65.00° (5°)
R8.00
4.00
90° (30°)

FIG. 13

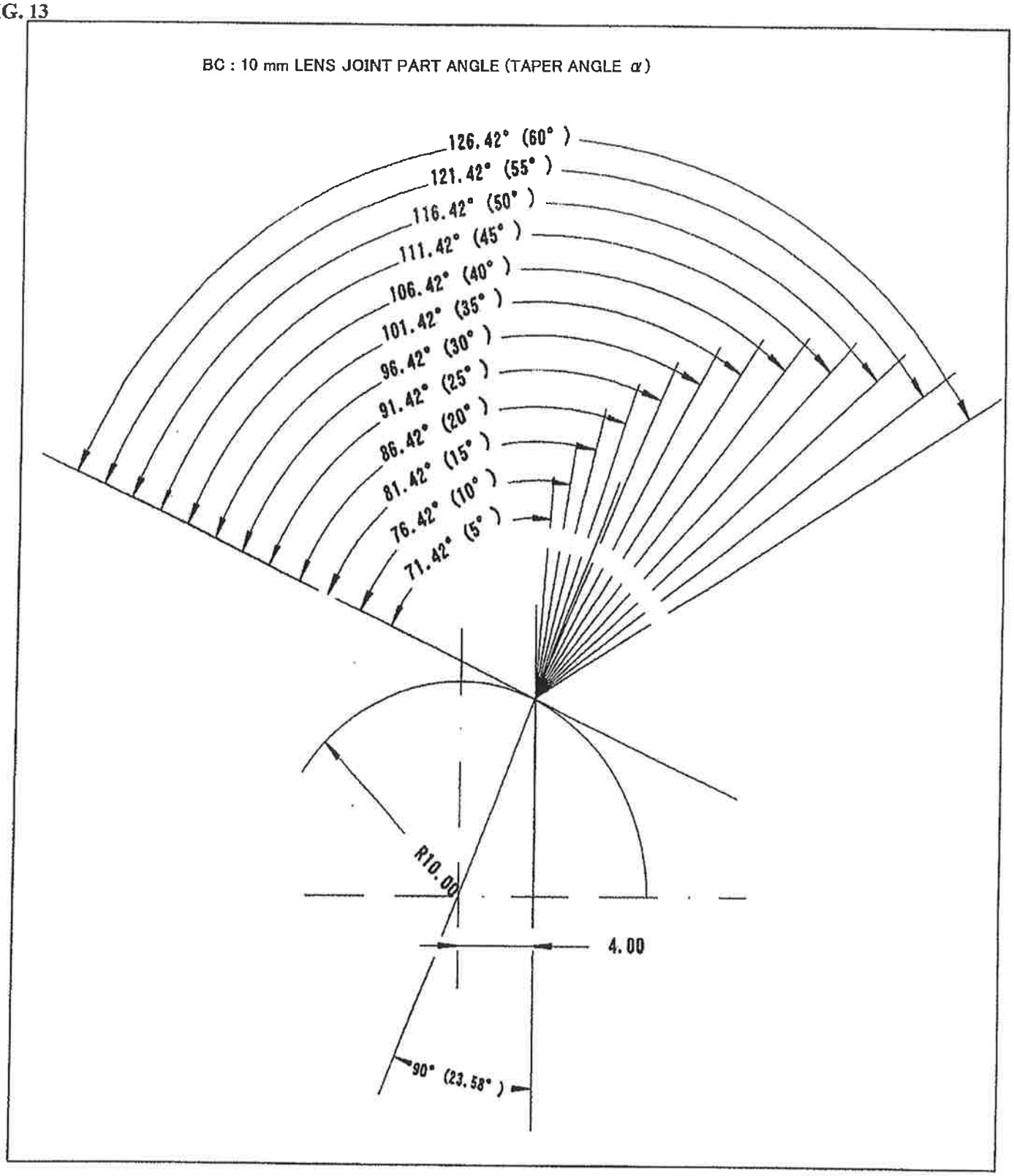
BC : 10 mm LENS JOINT PART ANGLE (TAPER ANGLE α)
126.42° (60°)
121.42° (55°)
116.42° (50°)
111.42° (45°)
106.42° (40°)
101.42° (35°)
96.42° (30°)
91.42° (25°)
86.42° (20°)
81.42° (15°)
76.42° (10°)
71.42° (5°)
R10.00
4.00
90° (23.58°)

FIG. 14

