(12) INTERNATIONAL APPLICATION PUBLISHED UNDER THE PATENT COOPERATION TREATY (PCT)

(19) World Intellectual Property Organization
International Bureau

(43) International Publication Date
26 November 2009 (26.11.2009)

PCT

(10) International Publication Number
WO 2009/140761 A1

(51) International Patent Classification:
F21V 29/00 (2006.01) *H05B 33/02* (2006.01)

(21) International Application Number:
PCT/CA2009/000689

(22) International Filing Date:
21 May 2009 (21.05.2009)

(25) Filing Language: English

(26) Publication Language: English

(30) Priority Data:

61/055,858	23 May 2008 (23.05.2008)	US
61/057,289	30 May 2008 (30.05.2008)	US
61/118,202	26 November 2008 (26.11.2008)	US

(71) Applicant *(for all designated States except US)*: **LIGHT ENGINE LIMITED** [CN/CN]; 6/F, Photonics Centre, 2 Science Park, East Avenue, Hong Kong Science Park, Shatin Hong Kong (CN).

(72) Inventors; and
(75) Inventors/Applicants *(for US only)*: **CHU, Tin, Po** [CA/CN]; Unit F, 25/F, Tower 2, Bellagio No. 33, Castle Peak Road, Sham Tseng, Tsuen Wan, Hong Kong (CN). **LEUNG, Wa, Hing** [CN/CN]; Flat B, Flr. 29, Block 2, Sherwood Court, Kingswood Villas, 1 Tin Wu Road, Tin Shiu Wai, Hong Kong (CN).

(74) Agent: **RIDOUT & MAYBEE LLP**; 100 Murray Street, 4th Floor, Ottawa, Ontario K1N 0A1 (CA).

(81) Designated States *(unless otherwise indicated, for every kind of national protection available)*: AE, AG, AL, AM, AO, AT, AU, AZ, BA, BB, BG, BH, BR, BW, BY, BZ, CA, CH, CN, CO, CR, CU, CZ, DE, DK, DM, DO, DZ, EC, EE, EG, ES, FI, GB, GD, GE, GH, GM, GT, HN, HR, HU, ID, IL, IN, IS, JP, KE, KG, KM, KN, KP, KR, KZ, LA, LC, LK, LR, LS, LT, LU, LY, MA, MD, ME, MG, MK, MN, MW, MX, MY, MZ, NA, NG, NI, NO, NZ, OM, PG, PH, PL, PT, RO, RS, RU, SC, SD, SE, SG, SK, SL, SM, ST, SV, SY, TJ, TM, TN, TR, TT, TZ, UA, UG, US, UZ, VC, VN, ZA, ZM, ZW.

(84) Designated States *(unless otherwise indicated, for every kind of regional protection available)*: ARIPO (BW, GH, GM, KE, LS, MW, MZ, NA, SD, SL, SZ, TZ, UG, ZM, ZW), Eurasian (AM, AZ, BY, KG, KZ, MD, RU, TJ, TM), European (AT, BE, BG, CH, CY, CZ, DE, DK, EE, ES, FI, FR, GB, GR, HR, HU, IE, IS, IT, LT, LU, LV, MC, MK, MT, NL, NO, PL, PT, RO, SE, SI, SK, TR), OAPI (BF, BJ, CF, CG, CI, CM, GA, GN, GQ, GW, ML, MR, NE, SN, TD, TG).

Declarations under Rule 4.17:

— *as to applicant's entitlement to apply for and be granted a patent (Rule 4.17(ii))*

[Continued on next page]

(54) Title: NON-GLARE REFLECTIVE LED LIGHTING APPARATUS WITH HEAT SINK MOUNTING

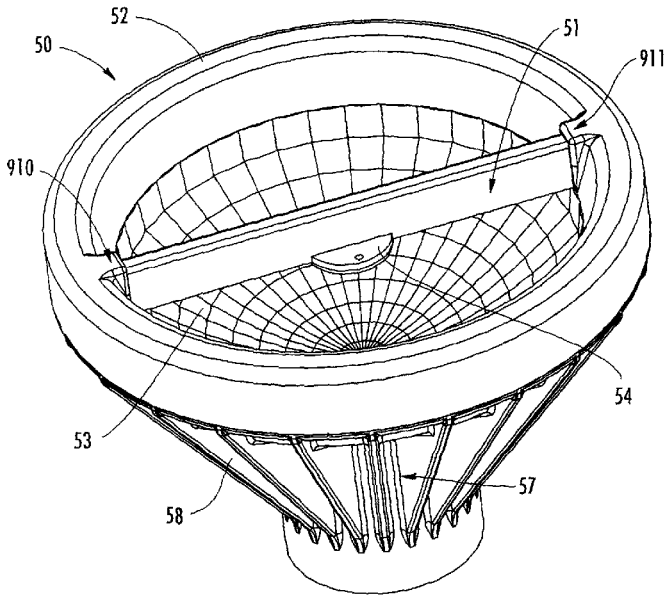

FIG. 8

(57) Abstract: A lighting apparatus using at least one light-emitting diode ("LED"), back-reflecting collection optics for LEDs, and an improved heat sink mounting apparatus which promotes efficient heat dissipation generated from the LED while minimizing light obstruction and glare. The lighting apparatus contains a main housing; a reflector disposed within the main housing, the reflector having a front side and a rear side; a top rim thermally coupled to one end of the main housing; a heat conducting body positioned to face the front side of the reflector, the heat conducting body comprising a heat pipe thermally coupled to the top rim; at least one light-emitting diode thermally coupled to the heat conducting body, the at least one light-emitting diode being positioned to face directly at the front side of the reflector so that light emitted from the at least one light-emitting diode is directed to the front side of the reflector.

WO 2009/140761 A1

Published:

— *with international search report (Art. 21(3))*

— *before the expiration of the time limit for amending the claims and to be republished in the event of receipt of amendments (Rule 48.2(h))*