(12) INTERNATIONAL APPLICATION PUBLISHED UNDER THE PATENT COOPERATION TREATY (PCT)

(19) World Intellectual Property Organization
International Bureau

(43) International Publication Date
29 January 2004 (29.01.2004)

PCT

(10) International Publication Number
WO 2004/010474 A3

(51) International Patent Classification[7]: F16K 31/12

(21) International Application Number:
PCT/US2003/022579

(22) International Filing Date: 18 July 2003 (18.07.2003)

(25) Filing Language: English

(26) Publication Language: English

(30) Priority Data:
60/397,053 19 July 2002 (19.07.2002) US

(71) Applicant *(for all designated States except US)*: **MYKROLIS CORPORATION** [US/US]; 129 Concord Road, Billerica, MA 01821-4600 (US).

(72) Inventors; and

(75) Inventors/Applicants *(for US only)*: **LAVERDIERE, Marc** [US/US]; 149 Broadway, Wakefield, MA 01880 (US). **MCLOUGHLIN, Robert, F.** [US/US]; 2 Jefferson Drive, Pelham, NH 03076 (US). **GONNELLA, George** [US/US]; 24 Elliott Street, Pepperell, MA 01463-1412 (US). **GASHGAEE, Iraj** [US/US]; 5 High Rock Circle, Waltham, MA 02451 (US). **MARRS, Jennifer** [US/US]; 41 Churchill Drive, Cornish, NH 03745 (US).

(74) Agents: **LEMACK, Kevin, S.** et al.; Nields & Lemack, 176 E. Main Street, Westboro, MA 01581 (US).

(81) Designated States *(national)*: AE, AG, AL, AM, AT, AU, AZ, BA, BB, BG, BR, BY, BZ, CA, CH, CN, CO, CR, CU, CZ, DE, DK, DM, DZ, EC, EE, ES, FI, GB, GD, GE, GH, GM, HR, HU, ID, IL, IN, IS, JP, KE, KG, KP, KR, KZ, LC, LK, LR, LS, LT, LU, LV, MA, MD, MG, MK, MN, MW, MX, MZ, NO, NZ, OM, PH, PL, PT, RO, RU, SC, SD, SE, SG, SK, SL, TJ, TM, TN, TR, TT, TZ, UA, UG, US, UZ, VC, VN, YU, ZA, ZM, ZW.

(84) Designated States *(regional)*: ARIPO patent (GH, GM, KE, LS, MW, MZ, SD, SL, SZ, TZ, UG, ZM, ZW), Eurasian patent (AM, AZ, BY, KG, KZ, MD, RU, TJ, TM), European patent (AT, BE, BG, CH, CY, CZ, DE, DK, EE, ES, FI, FR, GB, GR, HU, IE, IT, LU, MC, NL, PT, RO, SE, SI, SK, TR), OAPI patent (BF, BJ, CF, CG, CI, CM, GA, GN, GQ, GW, ML, MR, NE, SN, TD, TG).

Published:
— *with international search report*

[Continued on next page]

(54) Title: LIQUID FLOW CONTROLLER AND PRECISION DISPENSE APPARATUS AND SYSTEM

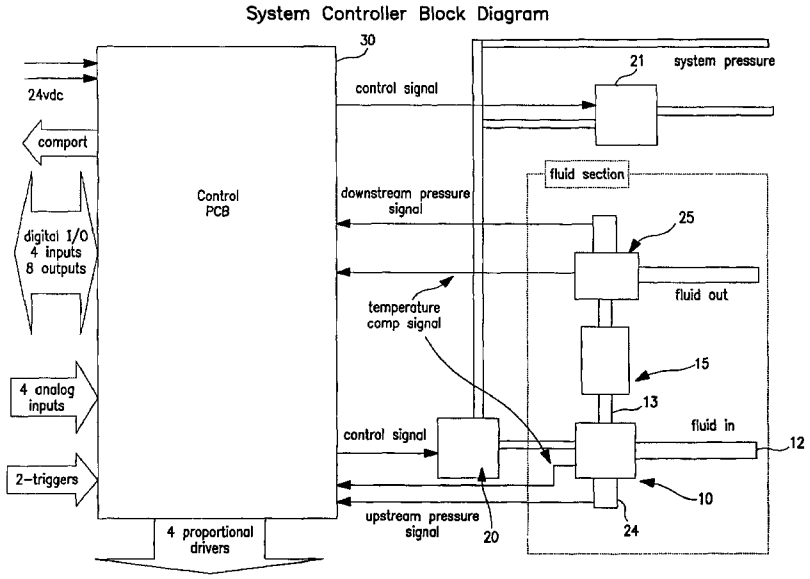

(57) Abstract: Apparatus and a control system for monitoring (preferably digitally) and/or controlling pressure to a pneumatic load such as a proportional fluid control valve and using a measurement input from a fluid measuremenc device that responds to a flow rate, the liquid measurement input being used to control the' pressure to the pneumatic load so that pneumatic load may be increased or decreased (to proportionally open or close the pneumatic valve) to change the flow rate of the fluid to a desired rate. The pneumatic load can also be adjusted (to proportionally open or close the pneumatic valve) to accommodate changes in temperature and viscosity of a fluid.

WO 2004/010474 A3

— *before the expiration of the time limit for amending the claims and to be republished in the event of receipt of amendments*

(88) Date of publication of the international search report:
6 May 2004

For two-letter codes and other abbreviations, refer to the "Guidance Notes on Codes and Abbreviations" appearing at the beginning of each regular issue of the PCT Gazette.