(12) INTERNATIONAL APPLICATION PUBLISHED UNDER THE PATENT COOPERATION TREATY (PCT)

(19) World Intellectual Property Organization
International Bureau

(43) International Publication Date
15 October 2020 (15.10.2020)

WIPO | PCT

(10) International Publication Number
WO 2020/210129 A1

(51) International Patent Classification:
C30B 15/00 (2006.01) *C30B 29/06* (2006.01)
C30B 15/22 (2006.01) *C30B 30/04* (2006.01)

(21) International Application Number:
PCT/US2020/026684

(22) International Filing Date:
03 April 2020 (03.04.2020)

(25) Filing Language: English

(26) Publication Language: English

(30) Priority Data:
62/832,561 11 April 2019 (11.04.2019) US

(71) Applicant: **GLOBALWAFERS CO., LTD.** [CN/CN]; No. 8 Industrial East Road 2, Science-Based Industrial Park, Hsinchu (TW).

(72) Inventors: **JAIN, Tapas**; 501 Pearl Drive, St. Peters, Missouri 63376 (US). **BHAGAVAT, Sumeet S.**; 501 Pearl Drive, St. Peters, Missouri 63376 (US). **LU, Zheng**; 501 Pearl Drive, St. Peters, Missouri 63376 (US). **TSAI, Feng-Chien**; 501 Pearl Drive, St. Peters, Missouri 63376 (US). **HUANG, Hong-Huei**; 501 Pearl Drive, St. Peters, Missouri 63376 (US).

(74) Agent: **SCHUTH, Richard A.** et al.; Armstrong Teasdale LLP, 7700 Forsyth Blvd., Suite 1800, St. Louis, Missouri 63105 (US).

(81) Designated States *(unless otherwise indicated, for every kind of national protection available)*: AE, AG, AL, AM, AO, AT, AU, AZ, BA, BB, BG, BH, BN, BR, BW, BY, BZ, CA, CH, CL, CN, CO, CR, CU, CZ, DE, DJ, DK, DM, DO, DZ, EC, EE, EG, ES, FI, GB, GD, GE, GH, GM, GT, HN, HR, HU, ID, IL, IN, IR, IS, JO, JP, KE, KG, KH, KN, KP, KR, KW, KZ, LA, LC, LK, LR, LS, LU, LY, MA, MD, ME, MG, MK, MN, MW, MX, MY, MZ, NA, NG, NI, NO, NZ, OM, PA, PE, PG, PH, PL, PT, QA, RO, RS, RU, RW, SA, SC, SD, SE, SG, SK, SL, ST, SV, SY, TH, TJ, TM, TN, TR, TT, TZ, UA, UG, US, UZ, VC, VN, WS, ZA, ZM, ZW.

(84) Designated States *(unless otherwise indicated, for every kind of regional protection available)*: ARIPO (BW, GH, GM, KE, LR, LS, MW, MZ, NA, RW, SD, SL, ST, SZ, TZ, UG, ZM, ZW), Eurasian (AM, AZ, BY, KG, KZ, RU, TJ, TM), European (AL, AT, BE, BG, CH, CY, CZ, DE, DK, EE, ES, FI, FR, GB, GR, HR, HU, IE, IS, IT, LT, LU, LV, MC, MK, MT, NL, NO, PL, PT, RO, RS, SE, SI, SK, SM, TR), OAPI (BF, BJ, CF, CG, CI, CM, GA, GN, GQ, GW, KM, ML, MR, NE, SN, TD, TG).

(54) Title: PROCESS FOR PREPARING INGOT HAVING REDUCED DISTORTION AT LATE BODY LENGTH

(57) Abstract: A method for growing a single crystal silicon ingot by the Czochralski method having reduced deviation in diameter is disclosed.

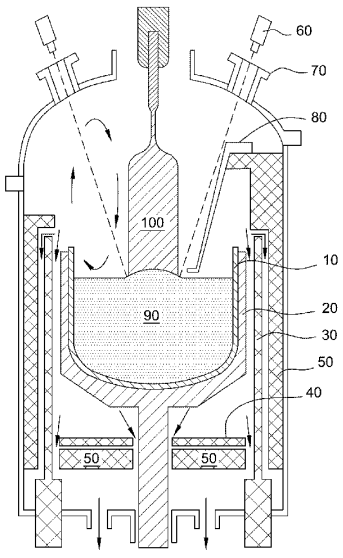

FIG. 3

WO 2020/210129 A1

[Continued on next page]

Published:
— *with international search report (Art. 21(3))*