(12) INTERNATIONAL APPLICATION PUBLISHED UNDER THE PATENT COOPERATION TREATY (PCT)

(19) World Intellectual Property Organization
International Bureau

(43) International Publication Date
06 February 2025 (06.02.2025)

WIPO | PCT

(10) International Publication Number
WO 2025/029859 A3

(51) International Patent Classification:
A61K 39/395 (2006.01) *C07K 16/28* (2006.01)
A61P 17/00 (2006.01)

(21) International Application Number:
PCT/US2024/040285

(22) International Filing Date:
31 July 2024 (31.07.2024)

(25) Filing Language: English

(26) Publication Language: English

(30) Priority Data:
63/516,535 31 July 2023 (31.07.2023) US

(71) Applicant: **Q32 BIO INC.** [US/US]; 830 Winter Street, Waltham, MA 02451 (US).

(72) Inventors: **CAMPAGNA, Jason**; c/o Q32 Bio Inc., 830 Winter Street, Waltham, MA 02451 (US). **MAYER, Christina**; c/o Q32 Bio Inc., 830 Winter Street, Waltham, MA 02451 (US). **SCHERER, Joel**; c/o Q32 Bio Inc., 830 Winter Street, Waltham, MA 02451 (US). **VIOLETTE, Shelia, Marie**; c/o Q32 Bio Inc., 830 Winter Street, Waltham, MA 02451 (US). **WU, Hong**; c/o Q32 Bio Inc., 830 Winter Street, Waltham, MA 02451 (US).

(74) Agent: **LU, Yu** et al.; McCarter & English, LLP, 265 Franklin Street, Boston, MA 02110 (US).

(81) Designated States *(unless otherwise indicated, for every kind of national protection available)*: AE, AG, AL, AM, AO, AT, AU, AZ, BA, BB, BG, BH, BN, BR, BW, BY, BZ, CA, CH, CL, CN, CO, CR, CU, CV, CZ, DE, DJ, DK, DM, DO, DZ, EC, EE, EG, ES, FI, GB, GD, GE, GH, GM, GT, HN, HR, HU, ID, IL, IN, IQ, IR, IS, IT, JM, JO, JP, KE, KG, KH, KN, KP, KR, KW, KZ, LA, LC, LK, LR, LS, LU, LY, MA, MD, MG, MK, MN, MU, MW, MX, MY, MZ, NA, NG, NI, NO, NZ, OM, PA, PE, PG, PH, PL, PT, QA, RO, RS, RU, RW, SA, SC, SD, SE, SG, SK, SL, ST, SV, SY, TH, TJ, TM, TN, TR, TT, TZ, UA, UG, US, UZ, VC, VN, WS, ZA, ZM, ZW.

(84) Designated States *(unless otherwise indicated, for every kind of regional protection available)*: ARIPO (BW, CV, GH, GM, KE, LR, LS, MW, MZ, NA, RW, SC, SD, SL, ST, SZ, TZ, UG, ZM, ZW), Eurasian (AM, AZ, BY, KG, KZ, RU, TJ, TM), European (AL, AT, BE, BG, CH, CY, CZ, DE, DK, EE, ES, FI, FR, GB, GR, HR, HU, IE, IS, IT, LT, LU, LV, MC, ME, MK, MT, NL, NO, PL, PT, RO, RS, SE, SI, SK, SM, TR), OAPI (BF, BJ, CF, CG, CI, CM, GA, GN, GQ, GW, KM, ML, MR, NE, SN, TD, TG).

(54) Title: TREATMENT OF ATOPIC DERMATITIS

FIG. 1

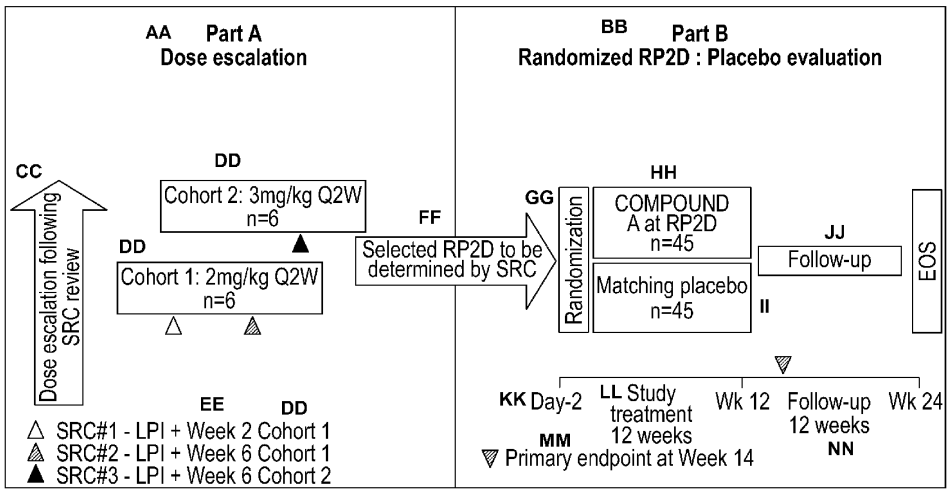

(57) Abstract: Provided are compounds, compositions and methods for treating atopic dermatitis (AD) in patients in need thereof.

[Continued on next page]

WO 2025/029859 A3

Declarations under Rule 4.17:

— *as to applicant's entitlement to apply for and be granted a patent (Rule 4.17(ii))*

— *as to the applicant's entitlement to claim the priority of the earlier application (Rule 4.17(iii))*

Published:

— *with international search report (Art. 21(3))*

— *before the expiration of the time limit for amending the claims and to be republished in the event of receipt of amendments (Rule 48.2(h))*

(88) Date of publication of the international search report:
20 March 2025 (20.03.2025)