(12) INTERNATIONAL APPLICATION PUBLISHED UNDER THE PATENT COOPERATION TREATY (PCT)

(19) World Intellectual Property Organization
International Bureau

(43) International Publication Date
21 August 2008 (21.08.2008)

PCT

(10) International Publication Number
WO 2008/098293 A1

(51) International Patent Classification:
A61B 3/103 (2006.01) *G02B 27/00* (2006.01)
G01M 11/02 (2006.01)

(21) International Application Number:
PCT/AU2008/000183

(22) International Filing Date:
14 February 2008 (14.02.2008)

(25) Filing Language: English

(26) Publication Language: English

(30) Priority Data:
2007900710 14 February 2007 (14.02.2007) AU

(71) Applicant *(for all designated States except US)*: **VISION CRC LIMITED** [AU/AU]; Level 4, Rupert Myers Building, Gate 14, Baker Street, University of New South Wales, Kengsington, NSW 2052 (AU).

(72) Inventors; and

(75) Inventors/Applicants *(for US only)*: **EHRMANN, Klaus** [DE/AU]; 3/2 Cameron Avenue, Manly, New South Wales 2095 (AU). **HO, Arthur** [AU/AU]; 9 Richard Avenue, Coogee, NSW 2034 (AU).

(74) Agent: **FREEHILLS PATENT & TRADE MARK ATTORNEYS**; Level 38, MLC Centre, Martin Place, Sydney, NSW 2000 (AU).

(81) Designated States *(unless otherwise indicated, for every kind of national protection available)*: AE, AG, AL, AM, AO, AT, AU, AZ, BA, BB, BG, BH, BR, BW, BY, BZ, CA, CH, CN, CO, CR, CU, CZ, DE, DK, DM, DO, DZ, EC, EE, EG, ES, FI, GB, GD, GE, GH, GM, GT, HN, HR, HU, ID, IL, IN, IS, JP, KE, KG, KM, KN, KP, KR, KZ, LA, LC, LK, LR, LS, LT, LU, LY, MA, MD, ME, MG, MK, MN, MW, MX, MY, MZ, NA, NG, NI, NO, NZ, OM, PG, PH, PL, PT, RO, RS, RU, SC, SD, SE, SG, SK, SL, SM, SV, SY, TJ, TM, TN, TR, TT, TZ, UA, UG, US, UZ, VC, VN, ZA, ZM, ZW.

(84) Designated States *(unless otherwise indicated, for every kind of regional protection available)*: ARIPO (BW, GH, GM, KE, LS, MW, MZ, NA, SD, SL, SZ, TZ, UG, ZM, ZW), Eurasian (AM, AZ, BY, KG, KZ, MD, RU, TJ, TM), European (AT, BE, BG, CH, CY, CZ, DE, DK, EE, ES, FI, FR, GB, GR, HR, HU, IE, IS, IT, LT, LU, LV, MC, MT, NL, NO, PL, PT, RO, SE, SI, SK, TR), OAPI (BF, BJ, CF, CG, CI, CM, GA, GN, GQ, GW, ML, MR, NE, SN, TD, TG).

Published:
— *with international search report*

(54) Title: CHARACTERIZATION OF OPTICAL SYSTEMS

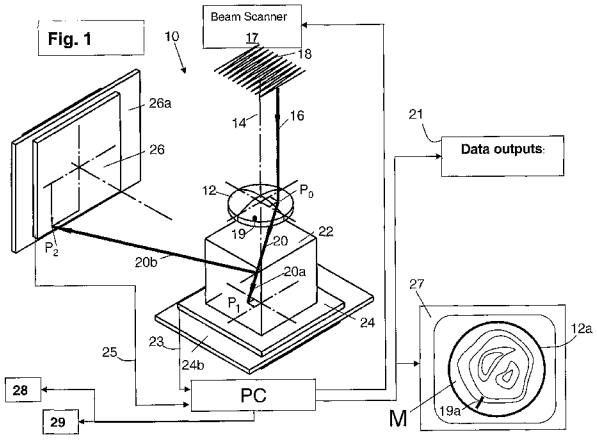

(57) Abstract: An instrument and method for characterizing the optical properties of an optical system, such as a lens, another optical device or the human eye, over an optical surface of the optical system. In one example [Figure 1], an incident beam (16) is scanned over the surface of a lens (12) to generate an emergent beam (20) that is divided by a beam-splitter (22) into two portions (20a and 20b) that are directed to respective two-dimensional detector arrays (24 and 26) located at different optical distances from the lens (12). The detector arrays (24 and 26) output the lateral coordinates of the points of incidence of the respective emergent beam portions (20a and 20b) so that the angle of emergent beam (20) with respect to the optical axis (14) or incident beam (16) can be accurately determined. Determining the variation in the angle of the emergent beam over the surface of the lens allows many important optical characteristics of the lens to be characterized and mapped onto to the surface of the lens. Many novel variants of the instrument and methods are disclosed.

WO 2008/098293 A1