FIG. 1

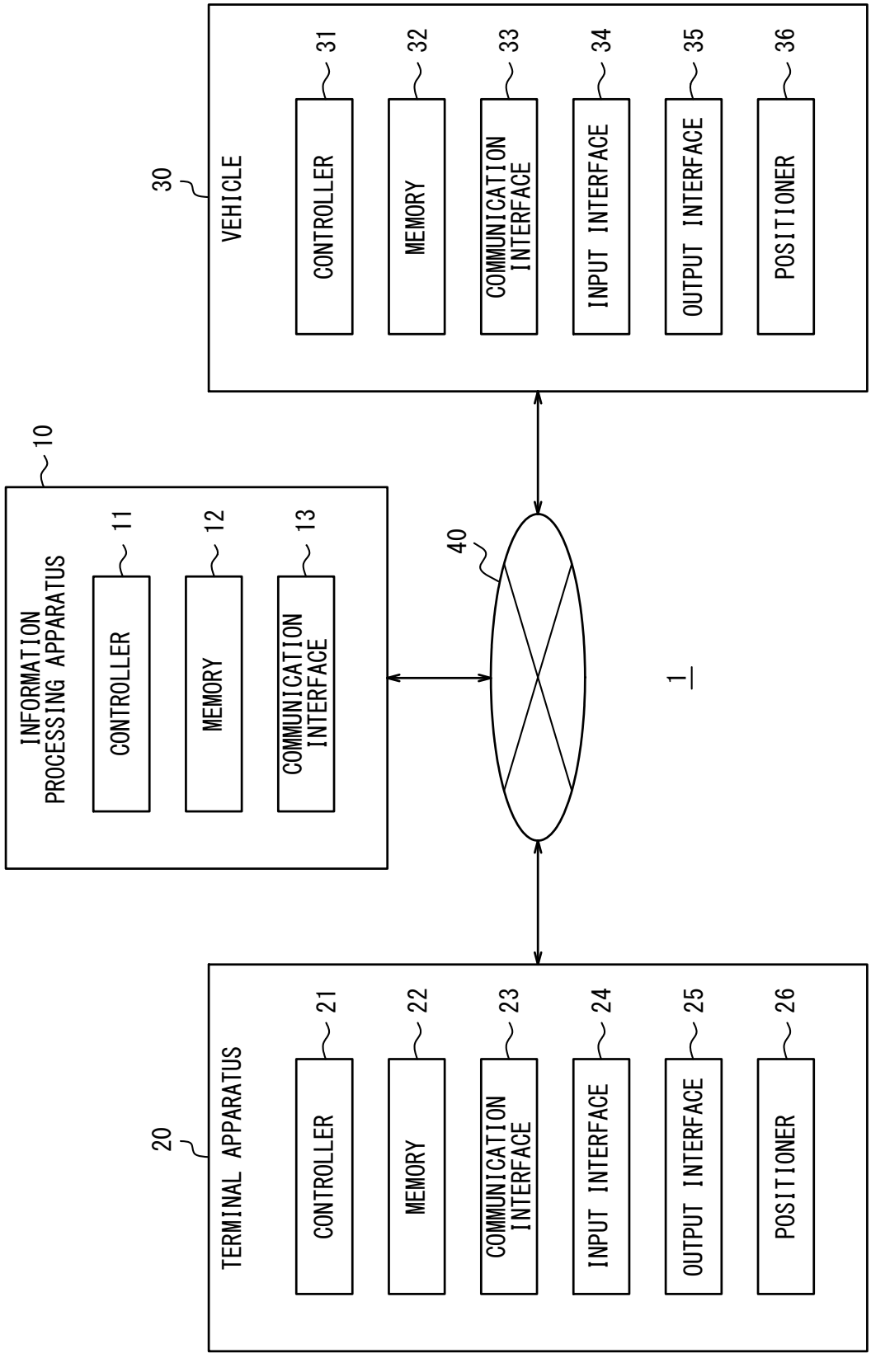
10
INFORMATION PROCESSING APPARATUS
11
CONTROLLER
12
MEMORY
13
COMMUNICATION INTERFACE
40
1
30
VEHICLE
31
CONTROLLER
32
MEMORY
33
COMMUNICATION INTERFACE
34
INPUT INTERFACE
35
OUTPUT INTERFACE
36
POSITIONER
20
TERMINAL APPARATUS
21
CONTROLLER
22
MEMORY
23
COMMUNICATION INTERFACE
24
INPUT INTERFACE
25
OUTPUT INTERFACE
26
POSITIONER

FIG. 2A

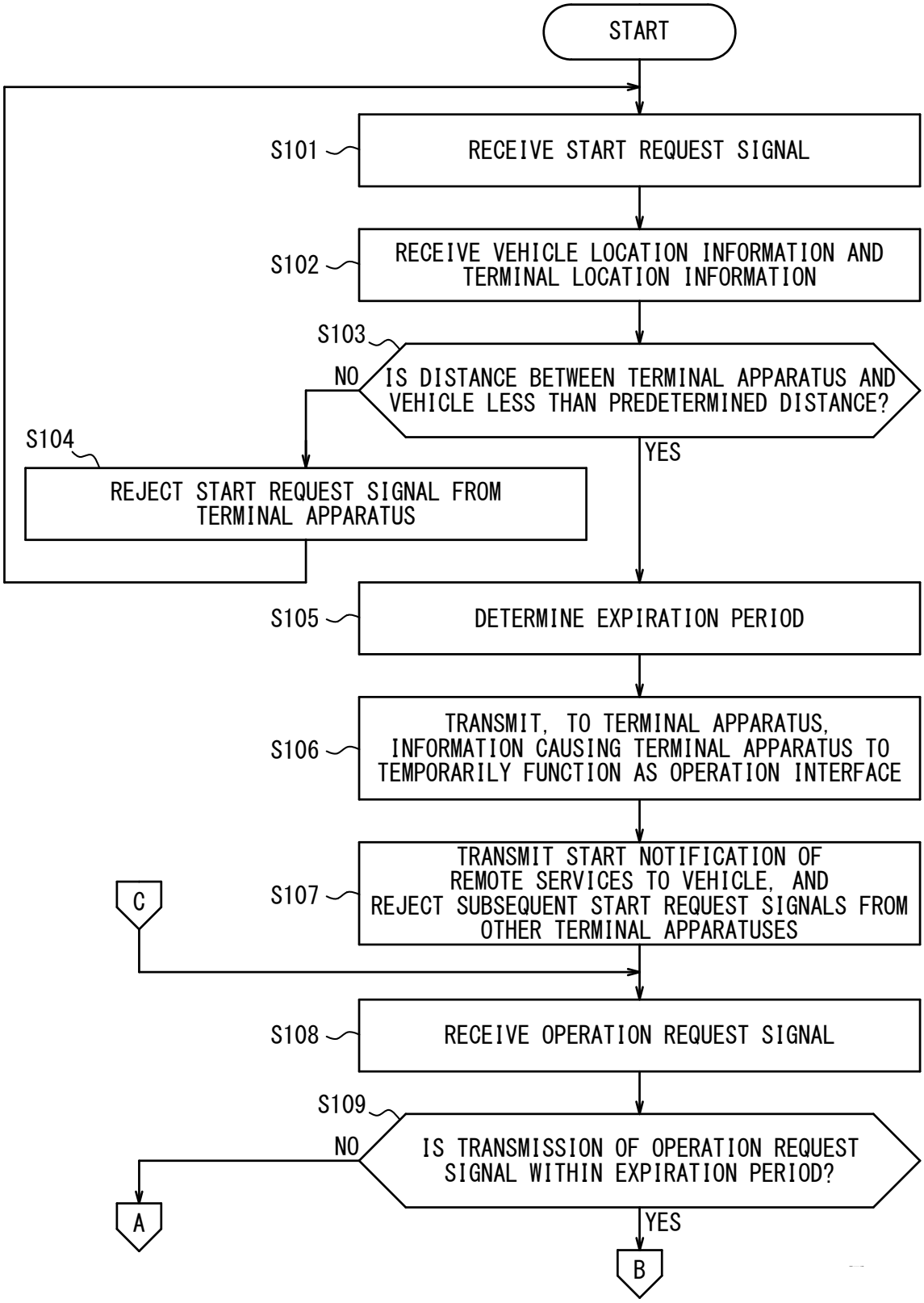
START
S101
RECEIVE START REQUEST SIGNAL
S102
RECEIVE VEHICLE LOCATION INFORMATION AND TERMINAL LOCATION INFORMATION
S103
NO
IS DISTANCE BETWEEN TERMINAL APPARATUS AND VEHICLE LESS THAN PREDETERMINED DISTANCE?
YES
S104
REJECT START REQUEST SIGNAL FROM TERMINAL APPARATUS
S105
DETERMINE EXPIRATION PERIOD
S106
TRANSMIT, TO TERMINAL APPARATUS, INFORMATION CAUSING TERMINAL APPARATUS TO TEMPORARILY FUNCTION AS OPERATION INTERFACE
S107
TRANSMIT START NOTIFICATION OF REMOTE SERVICES TO VEHICLE, AND REJECT SUBSEQUENT START REQUEST SIGNALS FROM OTHER TERMINAL APPARATUSES
C
S108
RECEIVE OPERATION REQUEST SIGNAL
S109
NO
IS TRANSMISSION OF OPERATION REQUEST SIGNAL WITHIN EXPIRATION PERIOD?
YES
A
B

FIG. 2B

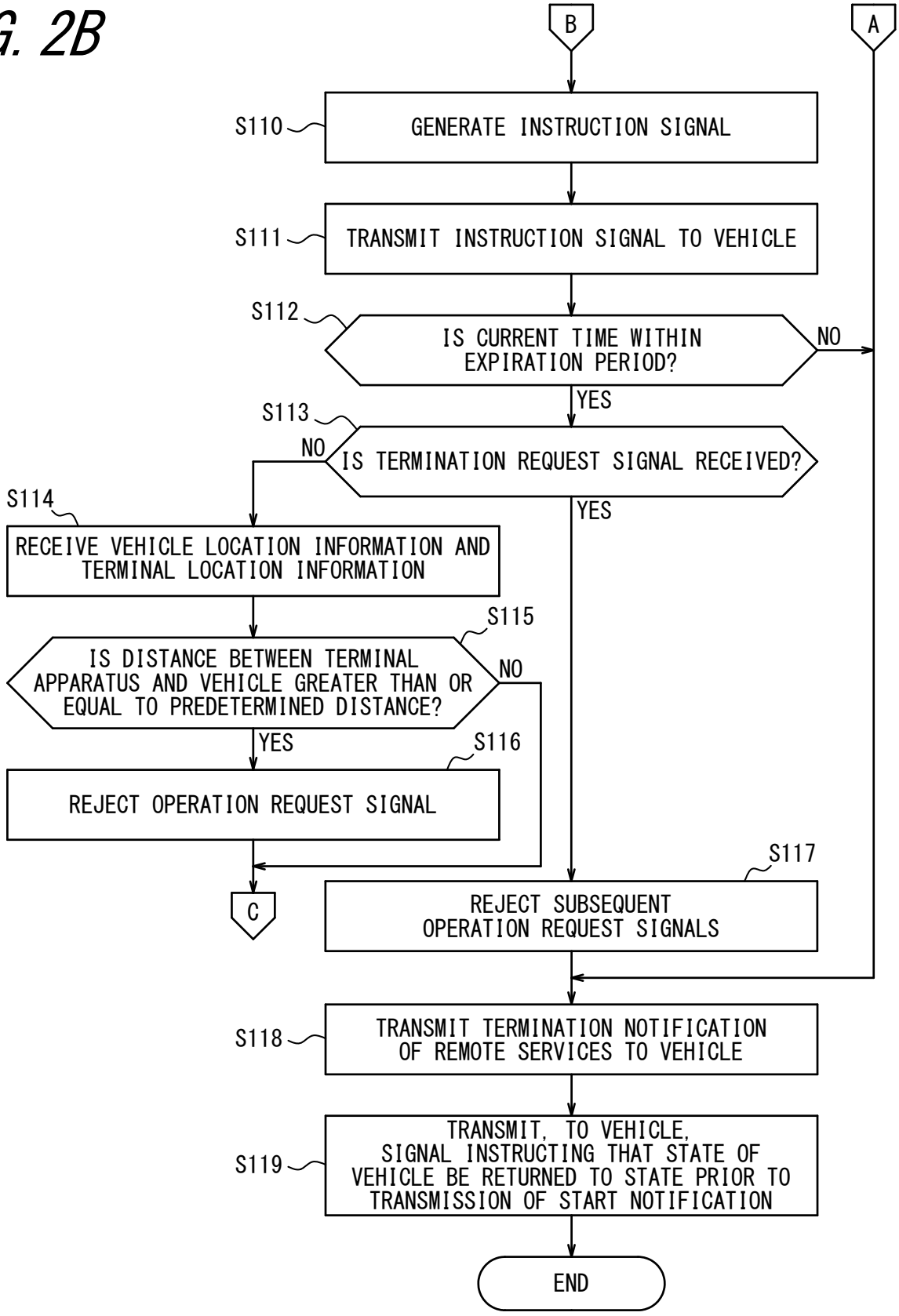
B
A
S110
GENERATE INSTRUCTION SIGNAL
S111
TRANSMIT INSTRUCTION SIGNAL TO VEHICLE
S112
IS CURRENT TIME WITHIN EXPIRATION PERIOD?
NO
YES
S113
NO
IS TERMINATION REQUEST SIGNAL RECEIVED?
YES
S114
RECEIVE VEHICLE LOCATION INFORMATION AND TERMINAL LOCATION INFORMATION
S115
IS DISTANCE BETWEEN TERMINAL APPARATUS AND VEHICLE GREATER THAN OR EQUAL TO PREDETERMINED DISTANCE?
NO
YES
S116
REJECT OPERATION REQUEST SIGNAL
C
S117
REJECT SUBSEQUENT OPERATION REQUEST SIGNALS
S118
TRANSMIT TERMINATION NOTIFICATION OF REMOTE SERVICES TO VEHICLE
S119
TRANSMIT, TO VEHICLE, SIGNAL INSTRUCTING THAT STATE OF VEHICLE BE RETURNED TO STATE PRIOR TO TRANSMISSION OF START NOTIFICATION
END