FIG. 1

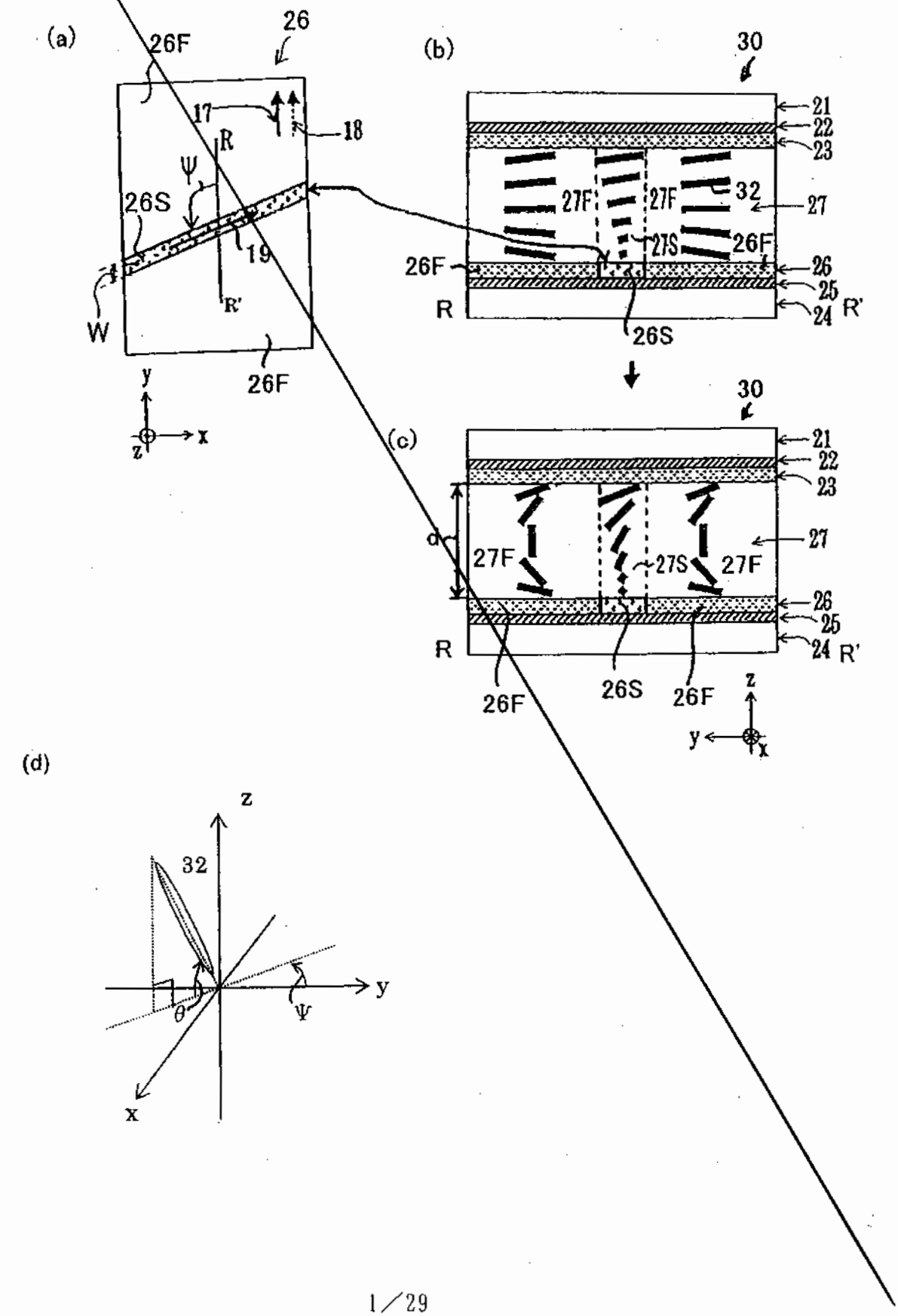
(a)
26
26F
17
18
R
Ψ
26S
19
R'
W
26F
y
x
z
(b)
30
21
22
23
27F
27F
32
27
27S
26F
26F
26
25
R
24
R'
26S
(c)
30
21
22
23
d
27F
27
27S
27F
26
25
R
24
R'
26F
26S
26F
z
y
x
(d)
z
32
y
θ
Ψ
x

FIG.2

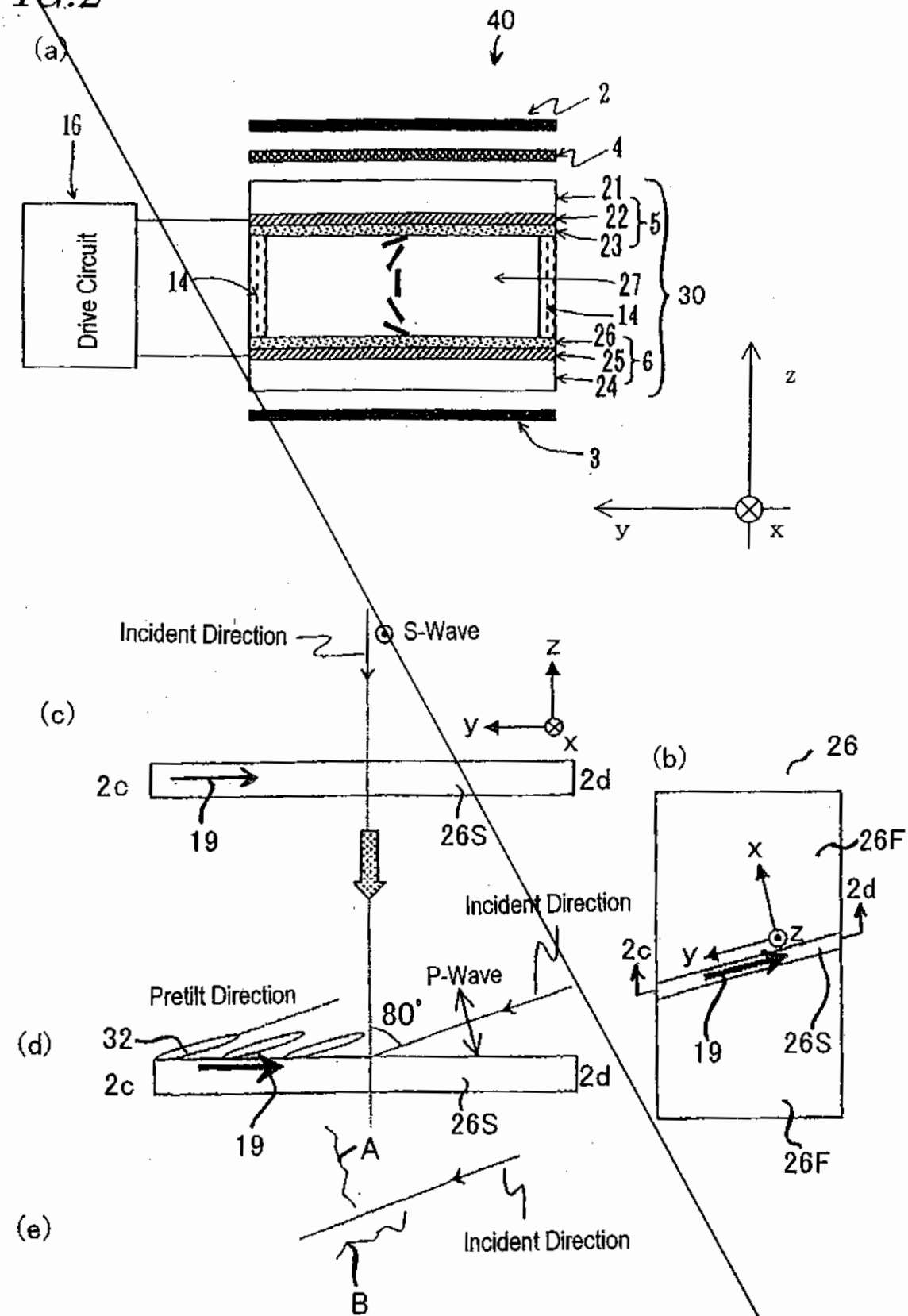
(a)
40
2
16
4
21
22
23
5
Drive Circuit
14
27
30
14
26
25
6
24
3
z
y
x
(c)
Incident Direction
S-Wave
z
y
x
2c
2d
19
26S
(b)
26
26F
x
2d
Incident Direction
z
2c
y
P-Wave
Pretilt Direction
80°
(d)
32
2c
2d
19
26S
A
26S
19
26F
(e)
Incident Direction
B

FIG.3

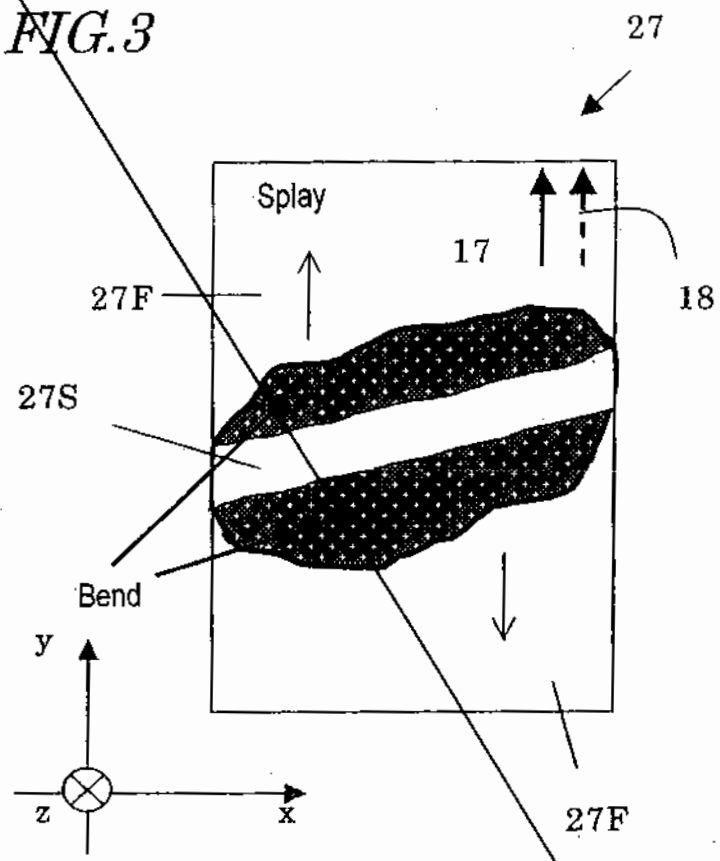

FIG.4

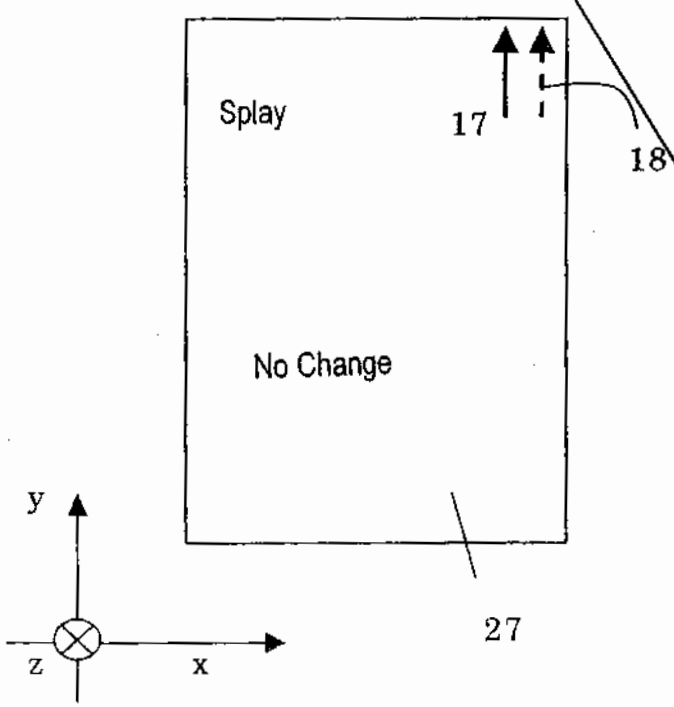

FIG.5

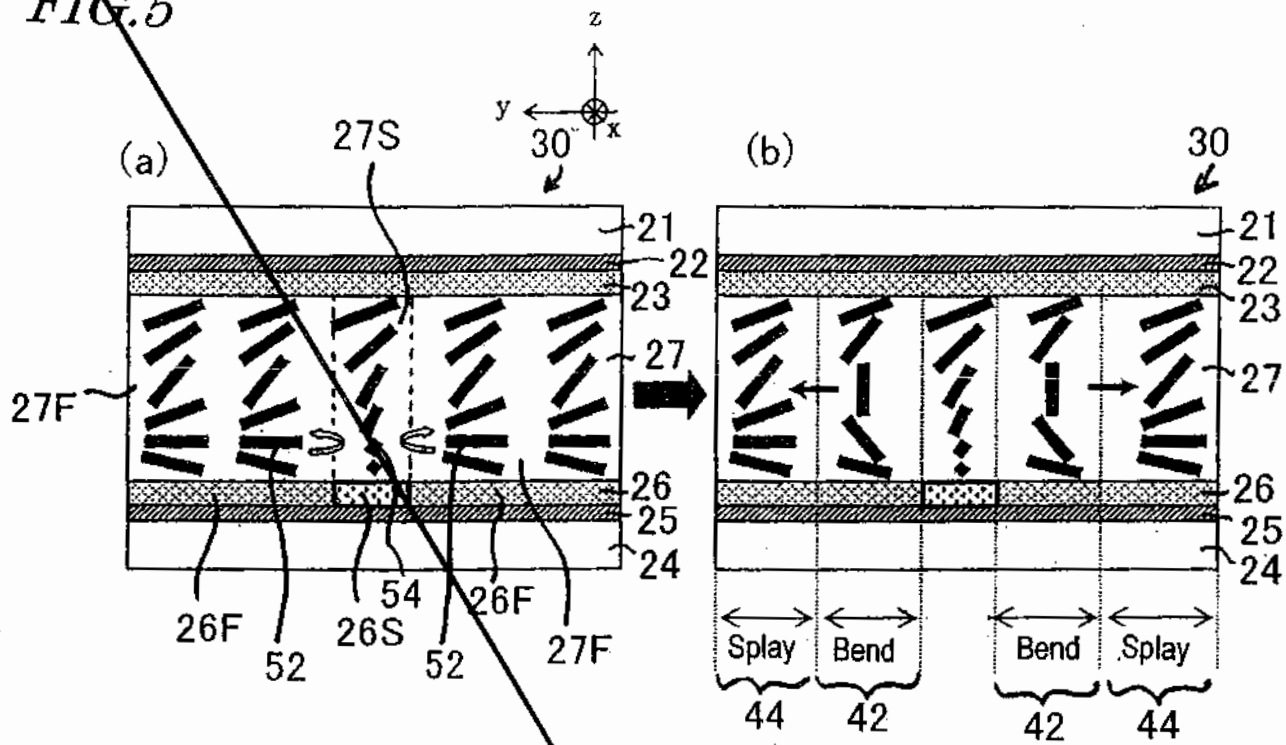
z
y
x
(a)
27S
30
(b)
30
21
22
23
27
27F
26
25
24
26F
52
26S
54
26F
52
27F
Splay
Bend
Bend
Splay
44
42
42
44

FIG.6

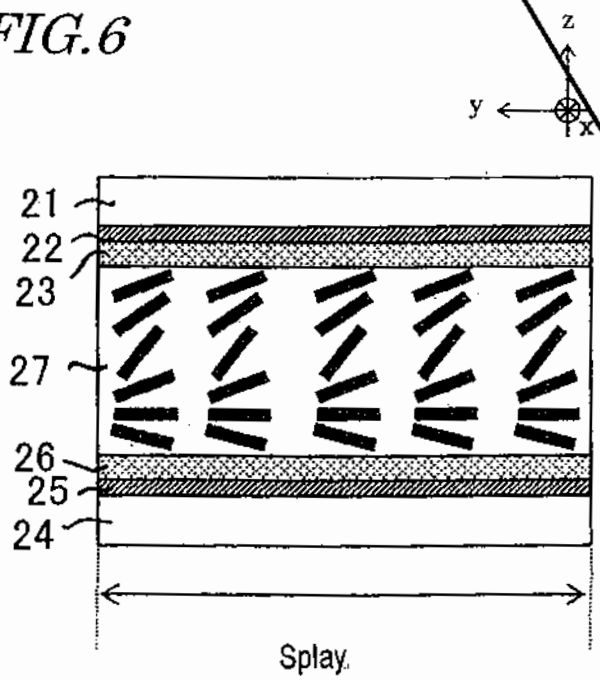
z
y
x
21
22
23
27
26
25
24
Splay

FIG. 7

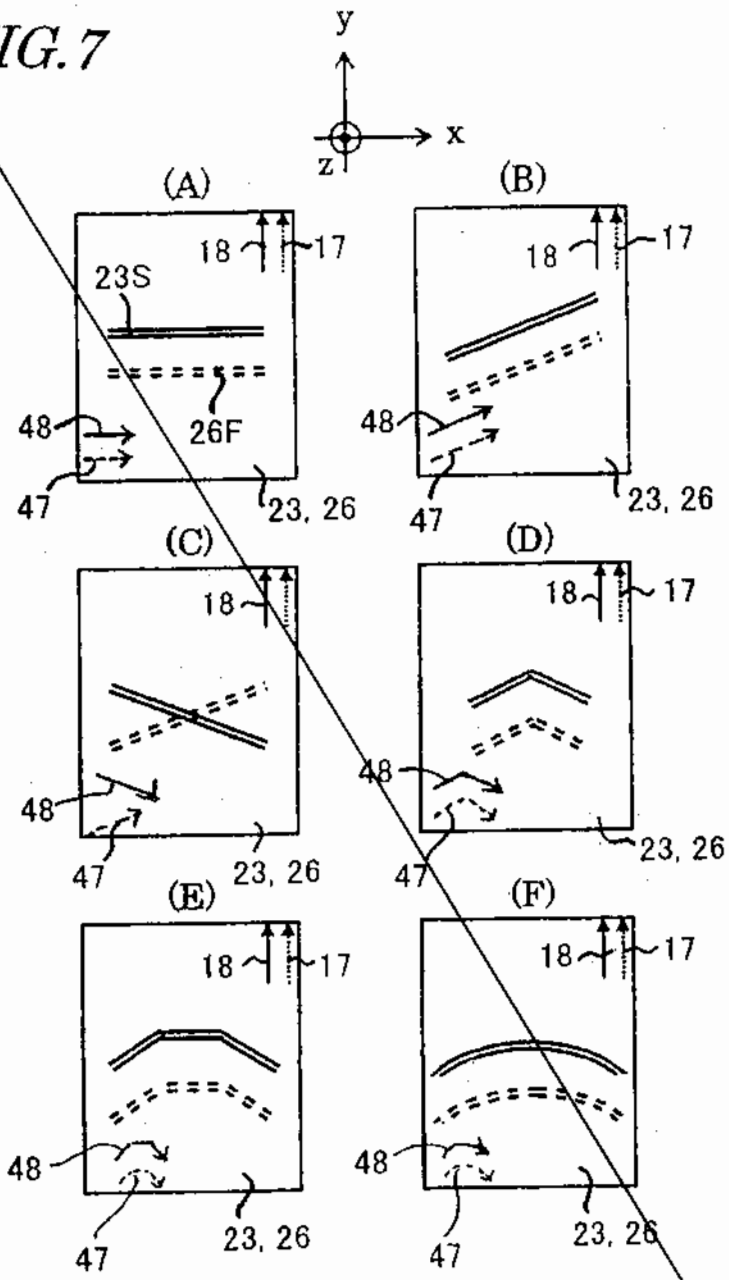
y
x
z
(A)
18
17
23S
26F
48
47
23, 26
(B)
18
17
48
47
23, 26
(C)
18
48
47
23, 26
(D)
18
17
48
47
23, 26
(E)
18
17
48
47
23, 26
(F)
18
17
48
47
23, 26

FIG.8

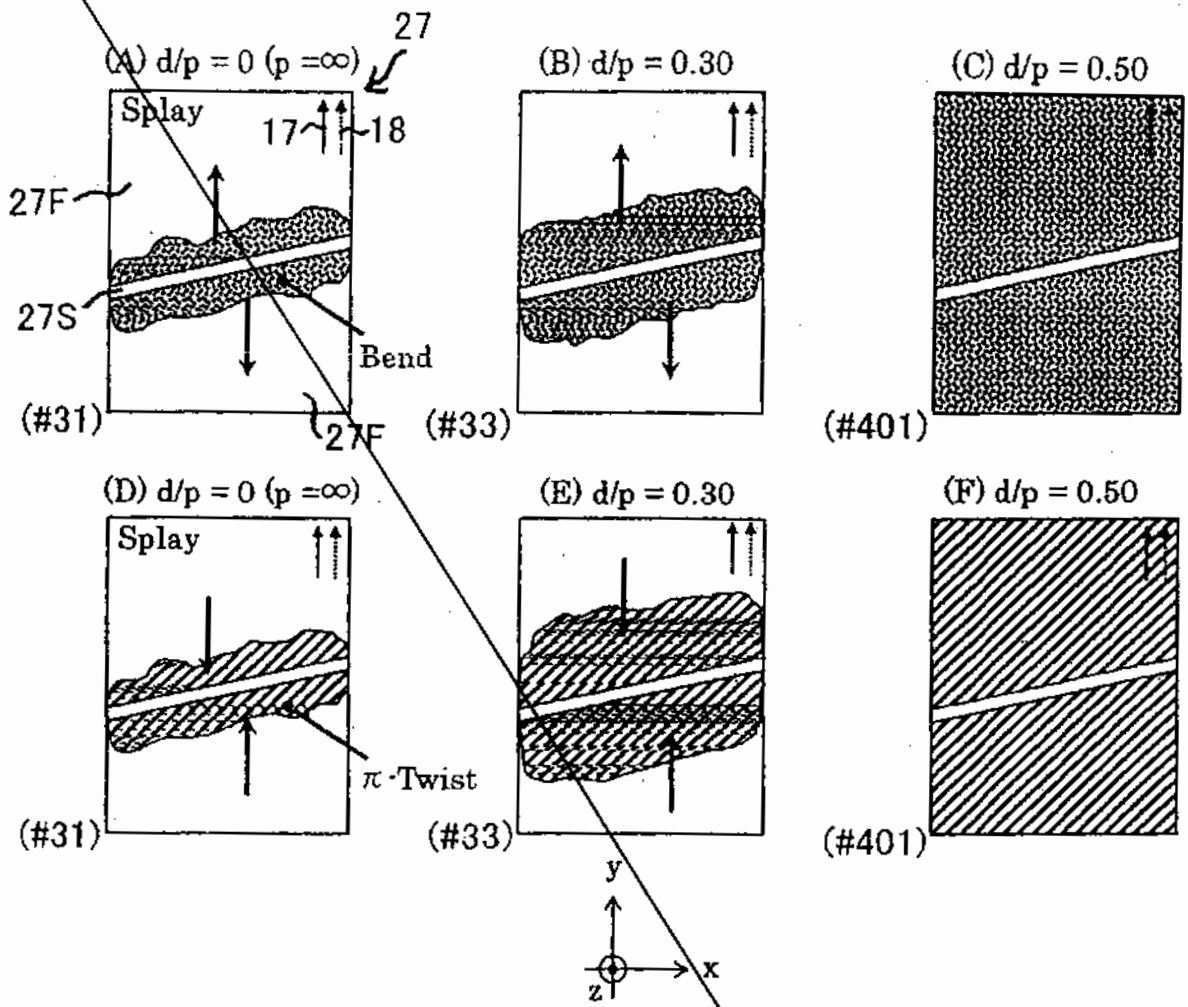
27
(A) d/p = 0 (p =∞)
Splay
17
18
27F
27S
Bend
(#31)
27F
(B) d/p = 0.30
(#33)
(C) d/p = 0.50
(#401)
(D) d/p = 0 (p =∞)
Splay
π-Twist
(#31)
(E) d/p = 0.30
(#33)
(F) d/p = 0.50
(#401)
y
x
z

FIG.9

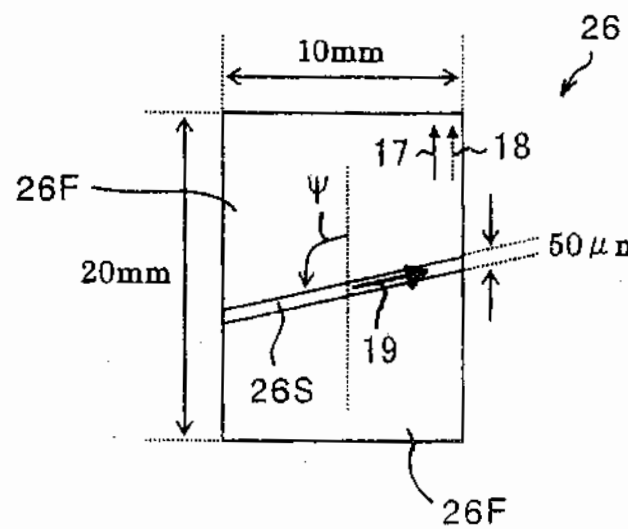
26
10mm
17
18
26F
Ψ
20mm
50 μm
19
26S
26F

FIG.10

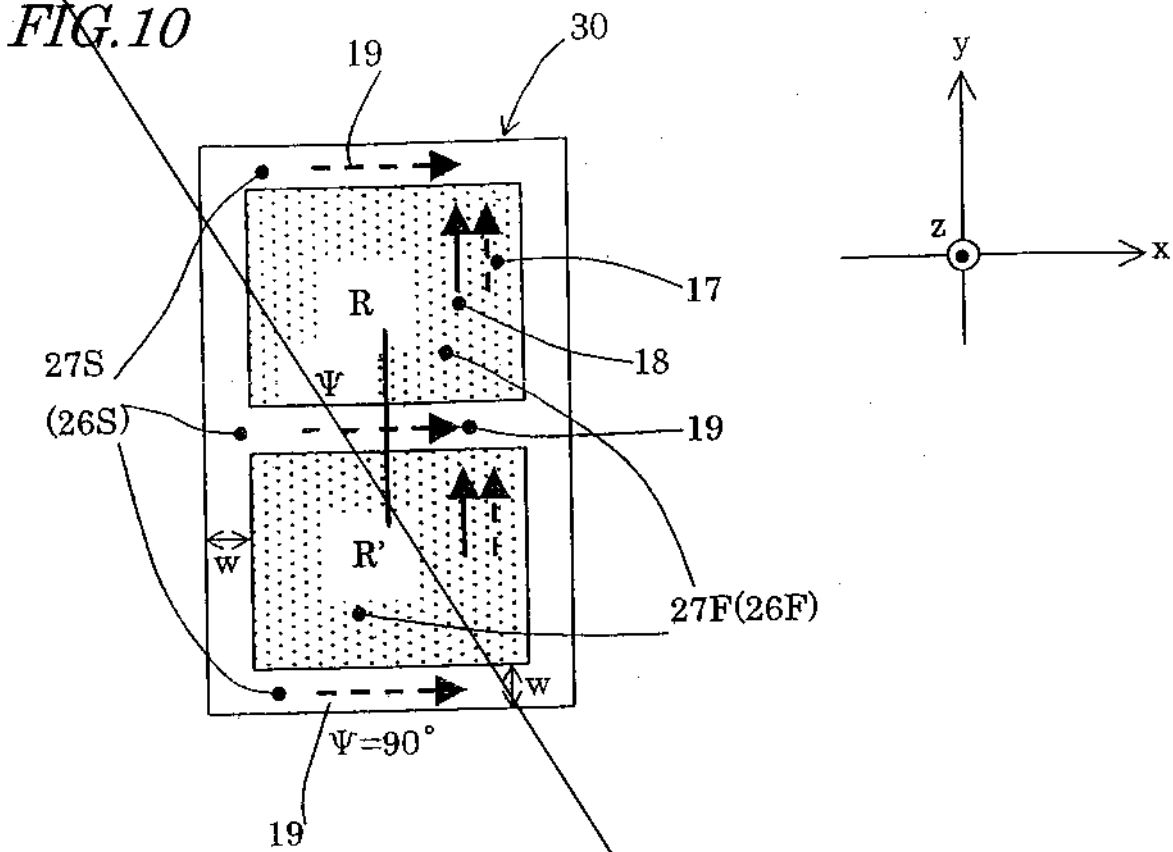

FIG.11

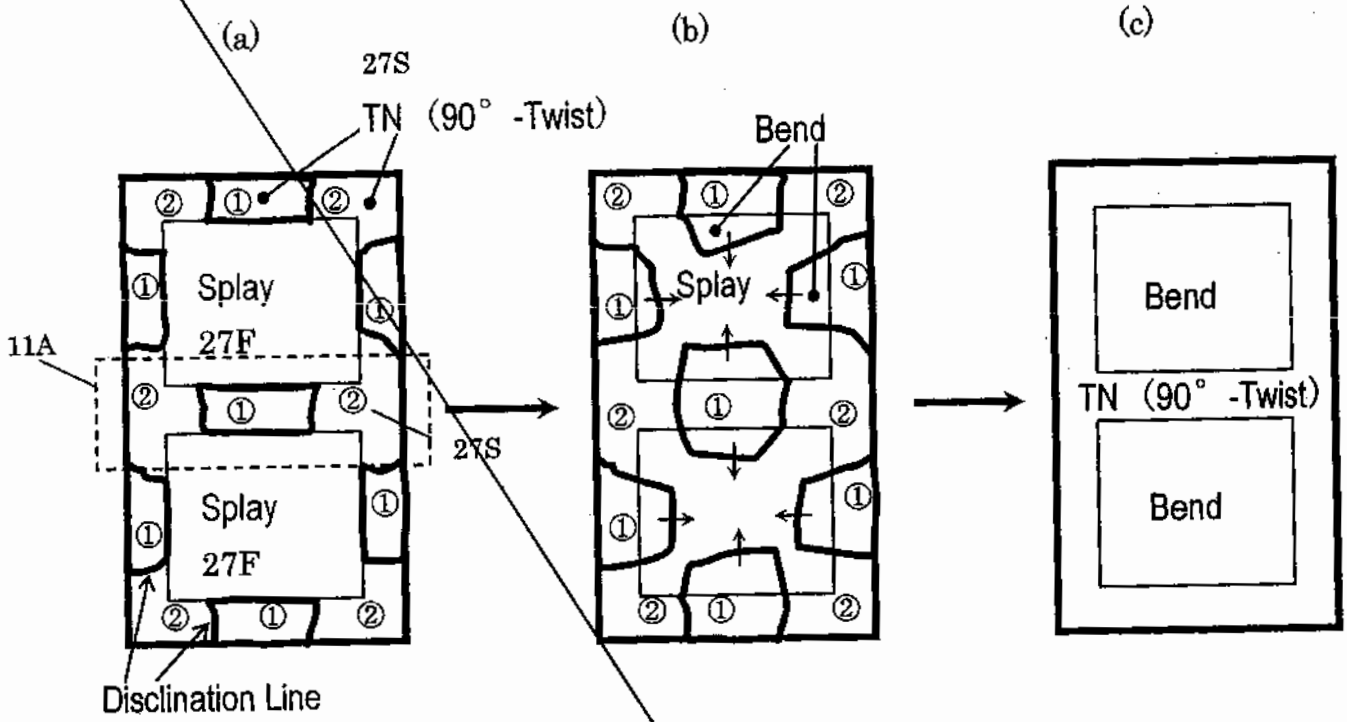
(a)
(b)
(c)
27S
TN (90° -Twist)
Bend
Splay
27F
11A
27S
Splay
27F
Bend
TN (90° -Twist)
Bend
Disclination Line

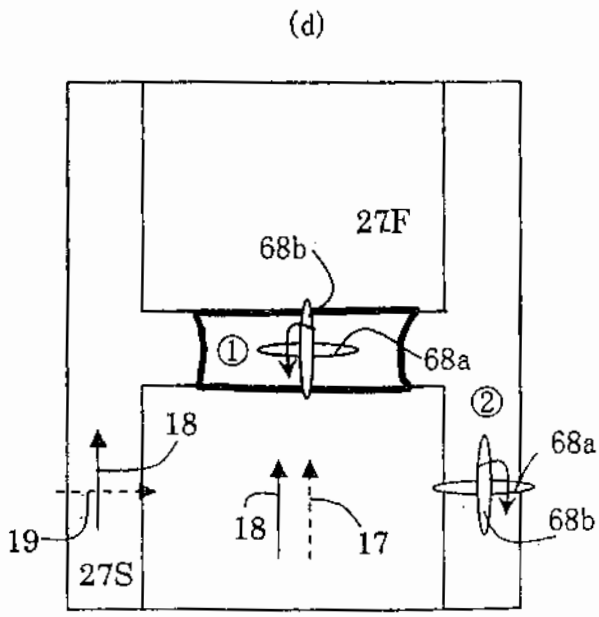
(d)
27F
68b
68a
18
19
27S
18
17
68a
68b

FIG.12

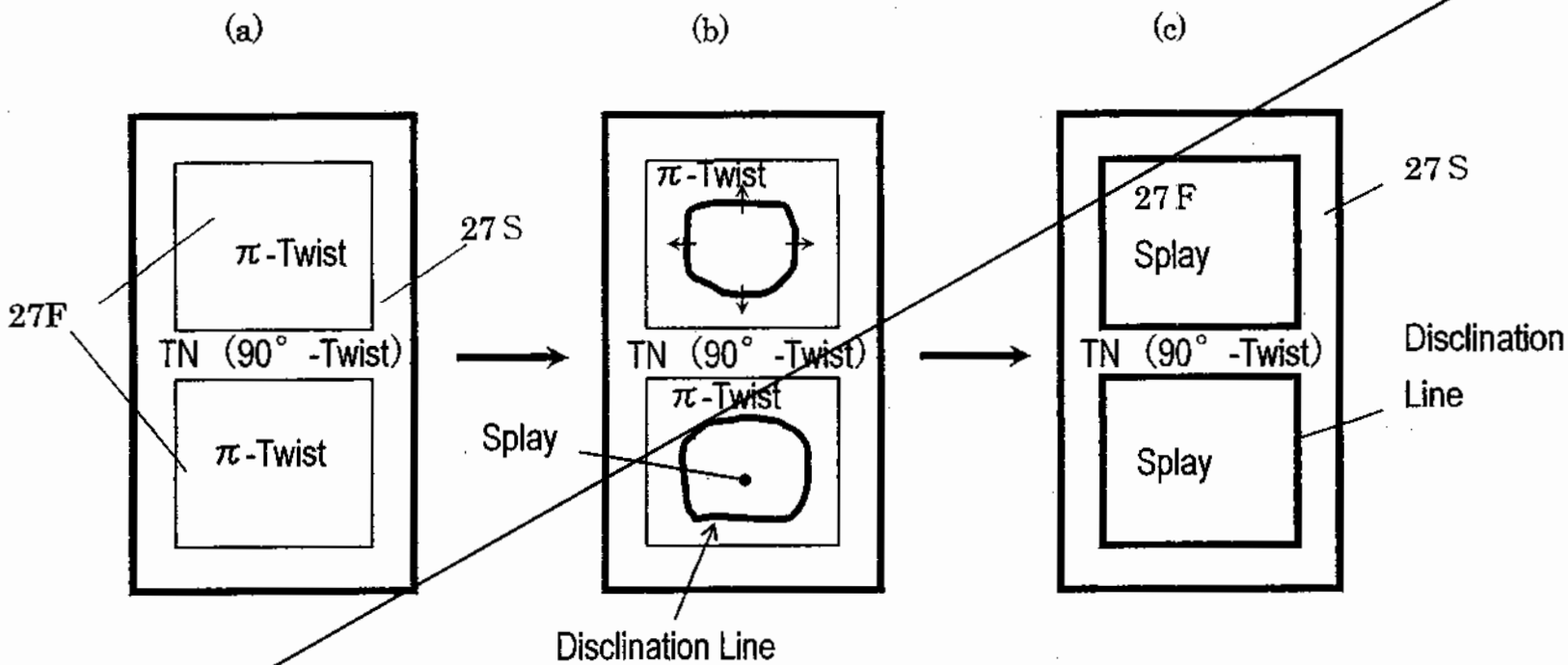
(a)
(b)
(c)
π-Twist
27S
27F
TN (90° -Twist)
π-Twist
Splay
π-Twist
TN (90° -Twist)
π-Twist
Disclination Line
27F
Splay
27S
TN (90° -Twist)
Disclination
Line
Splay

FIG.13

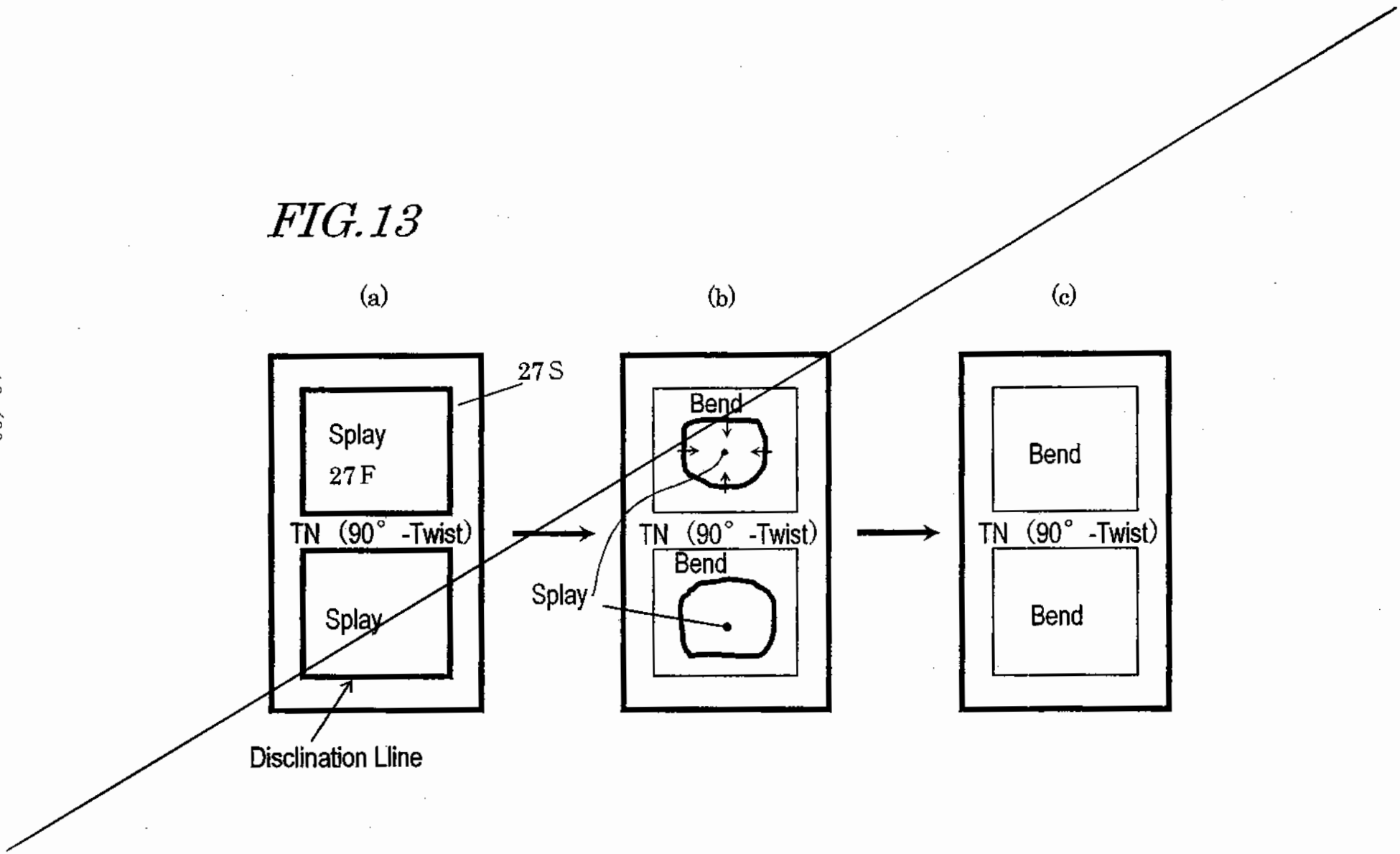
(a)
(b)
(c)
27S
Splay
27F
TN (90° -Twist)
Splay
Disclination Lline
Bend
TN (90° -Twist)
Bend
Splay
Bend
TN (90° -Twist)
Bend

FIG.14

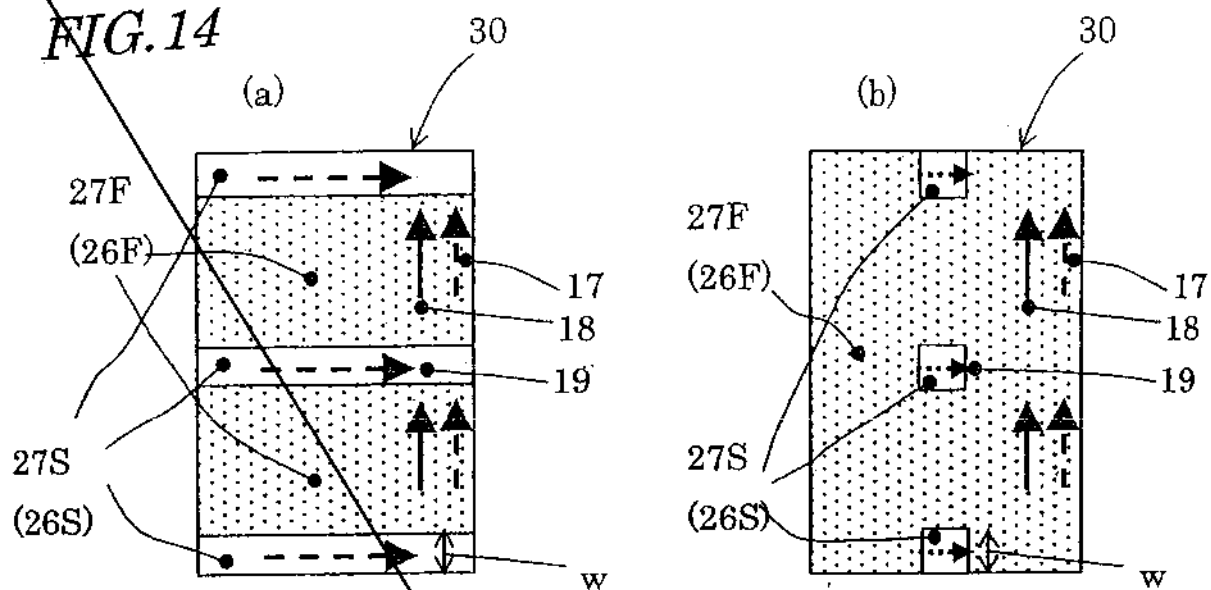

FIG. 15

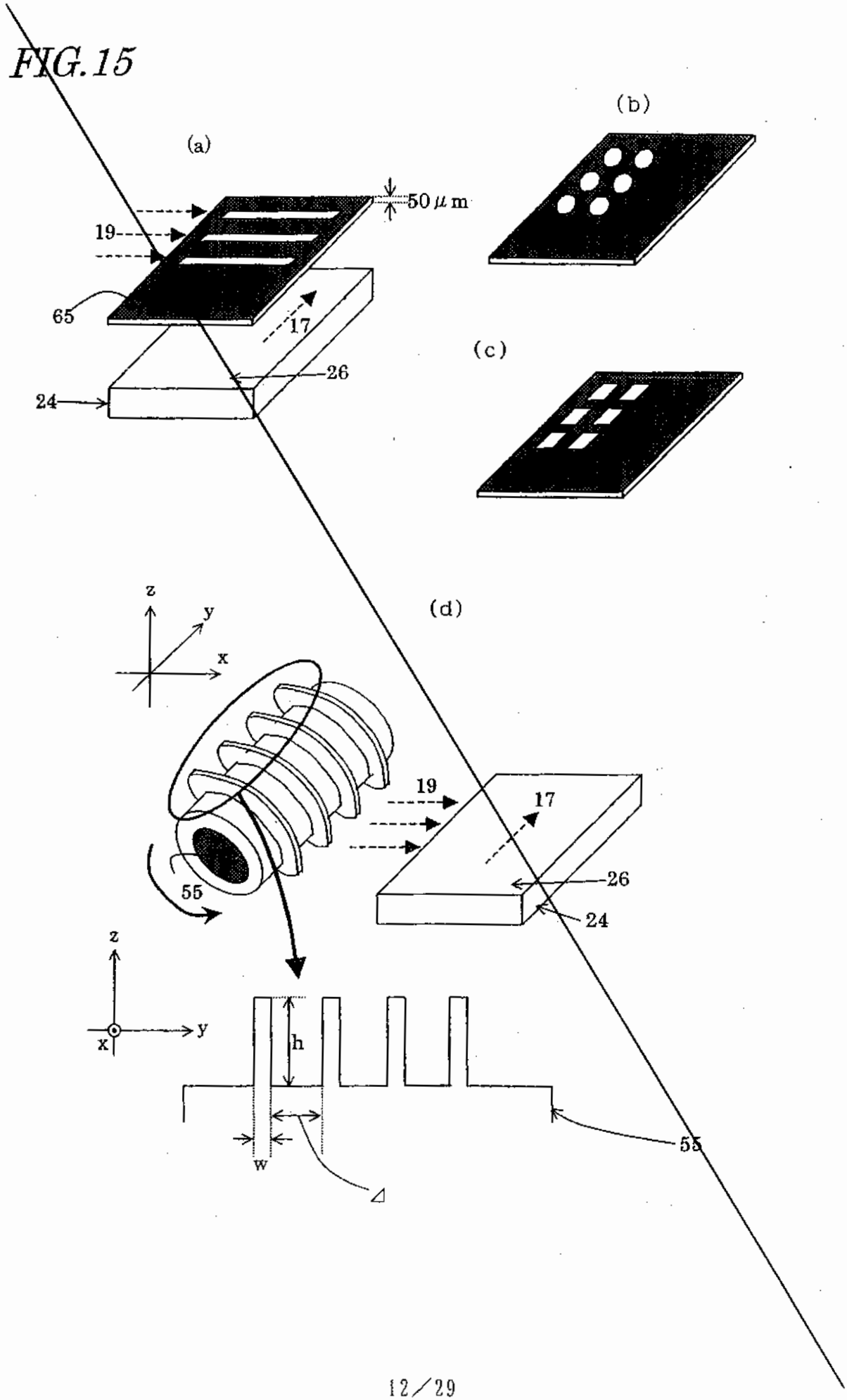

FIG.16

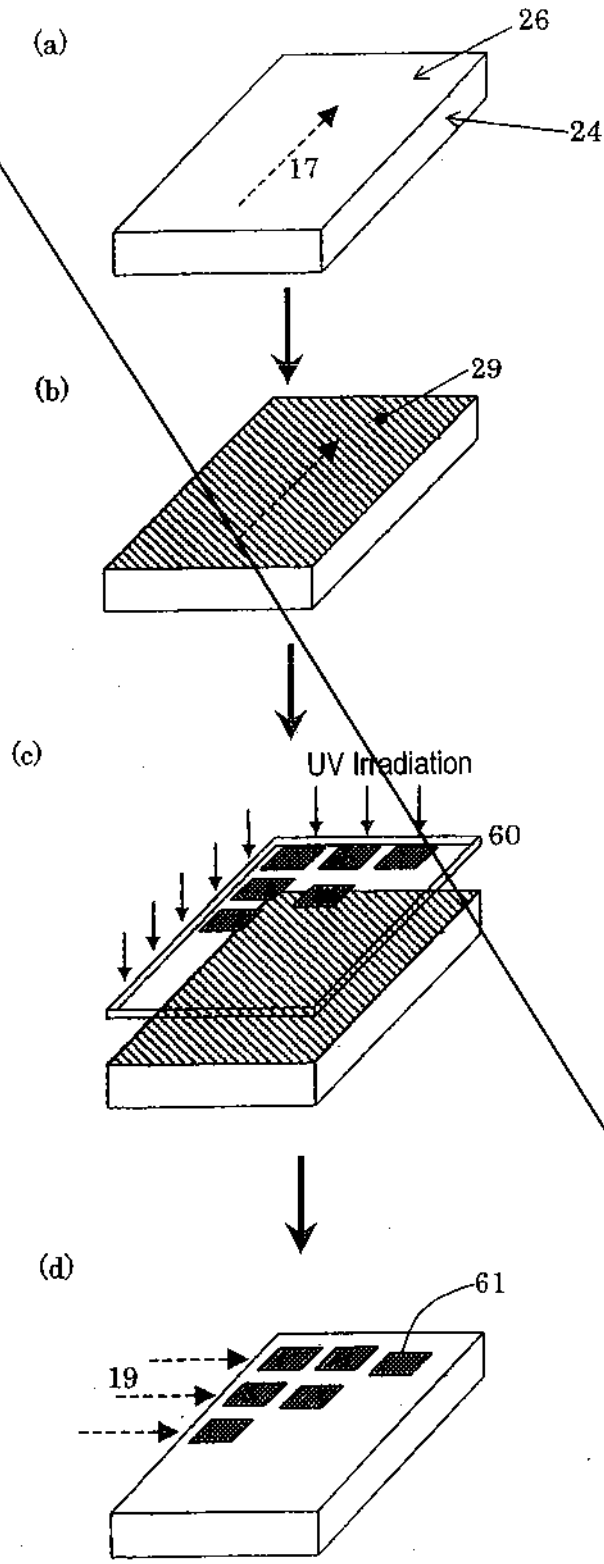

FIG.17

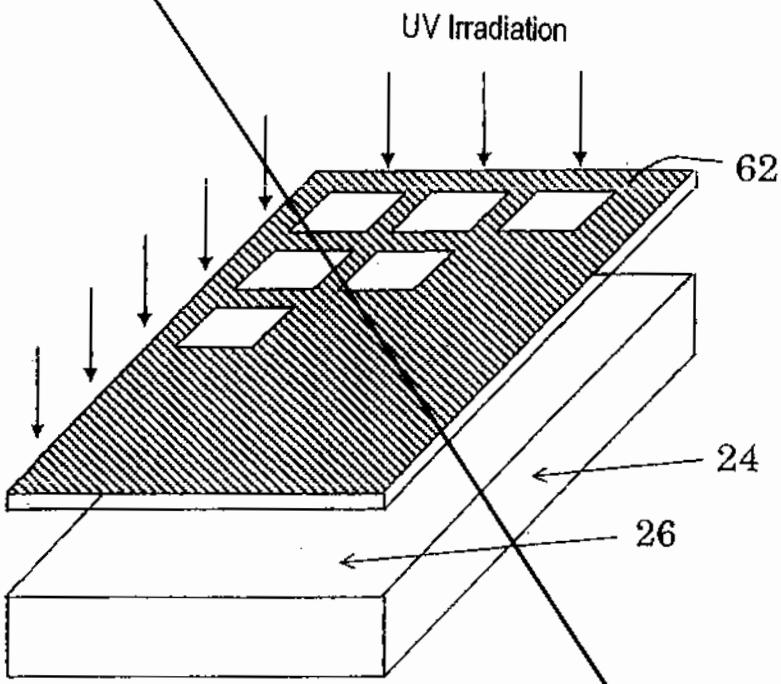

FIG. 18

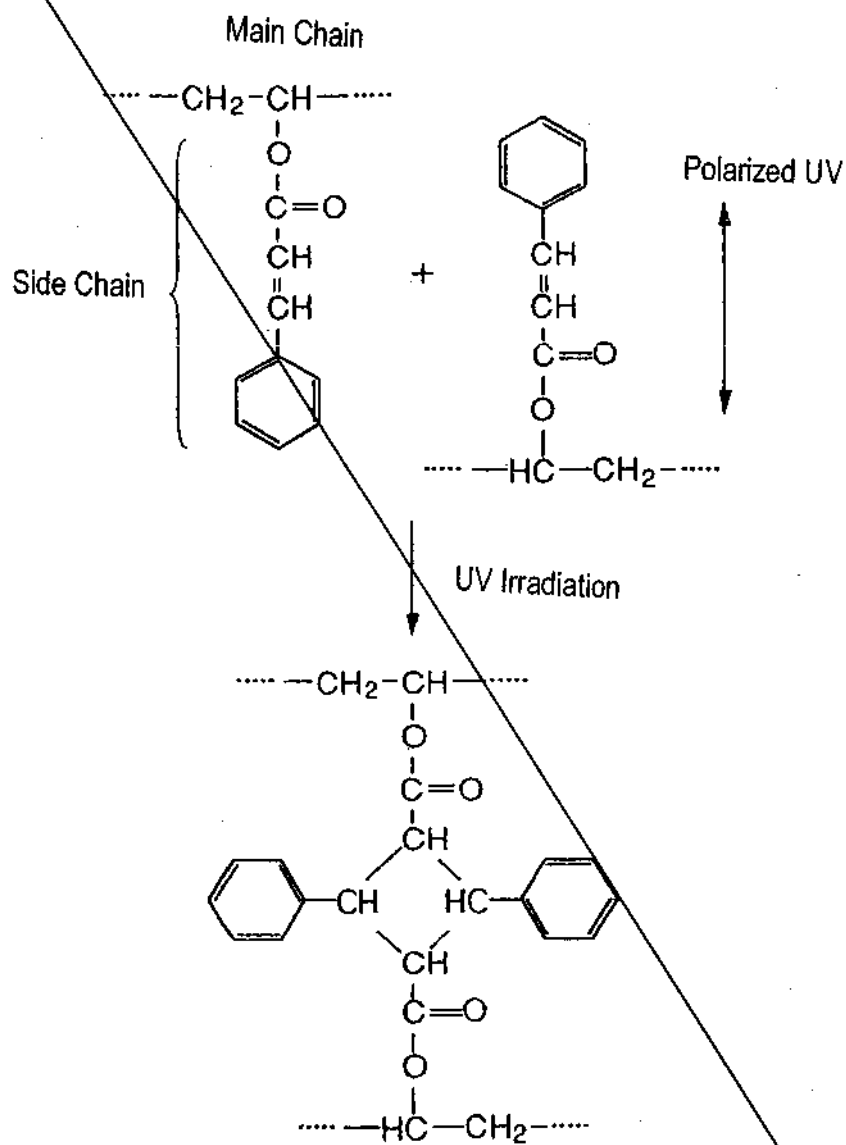

FIG. 19

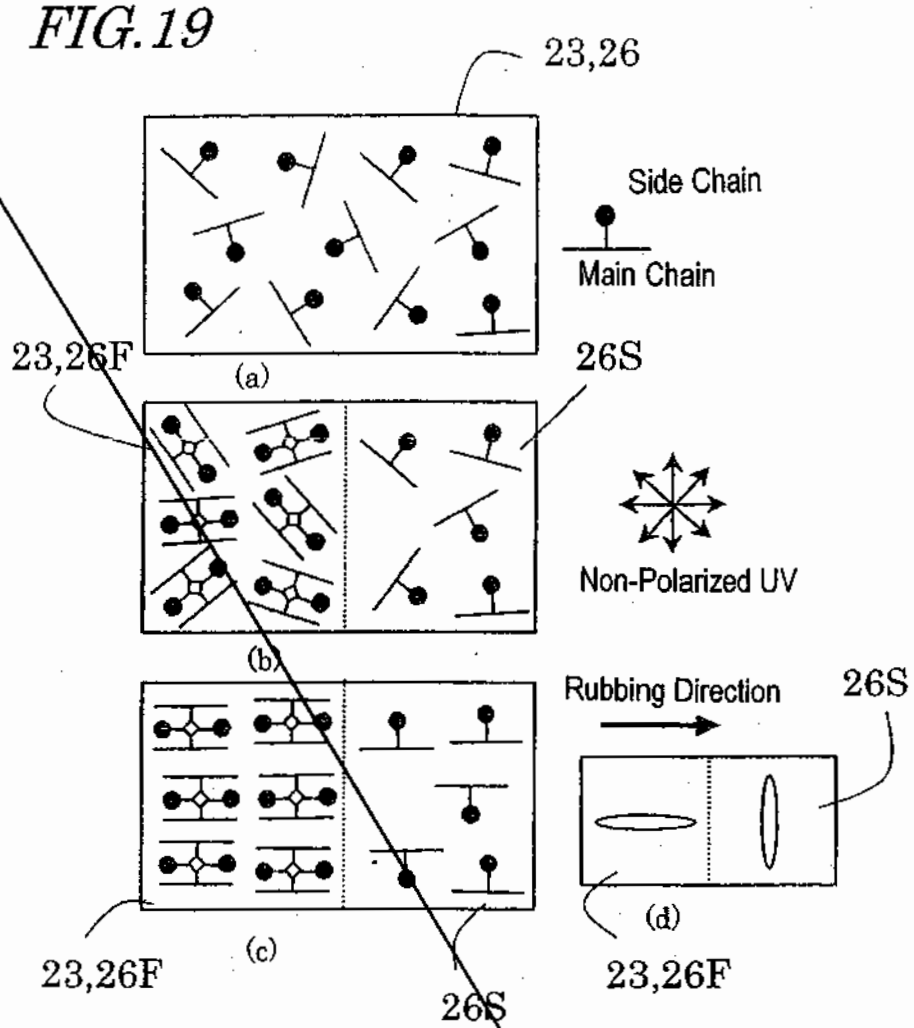
23,26
Side Chain
Main Chain
23,26F
26S
(a)
Non-Polarized UV
(b)
Rubbing Direction
26S
(d)
23,26F
(c)
23,26F
26S

FIG.20

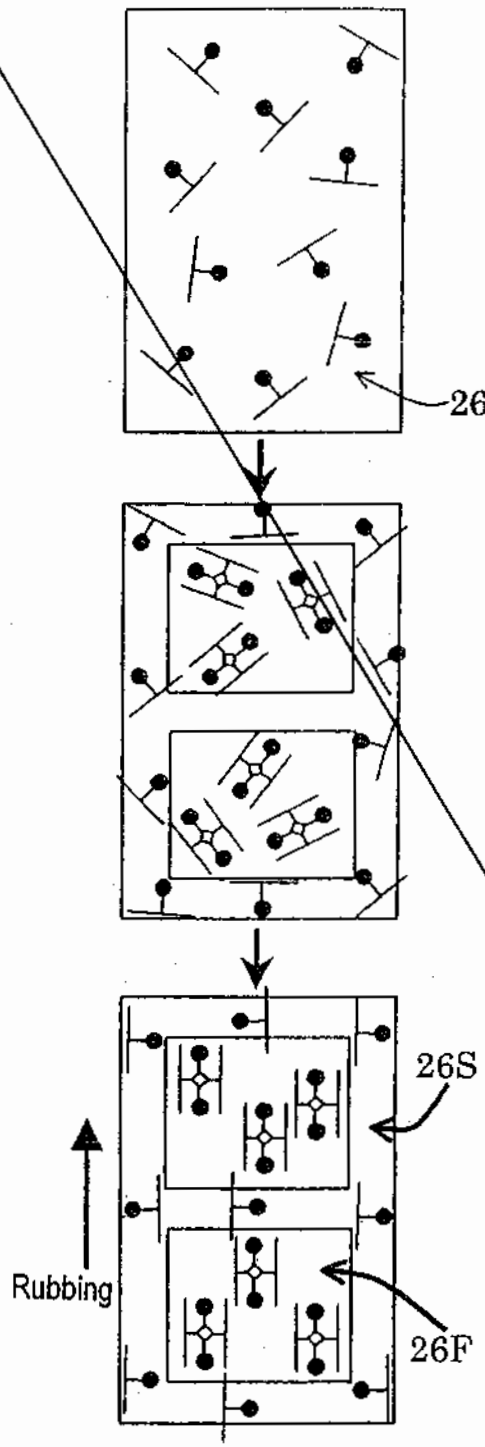

FIG.21

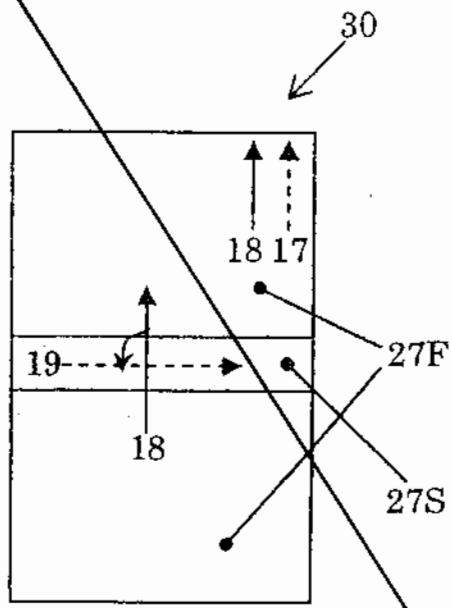
30
18
17
19
18
27F
27S

FIG.22

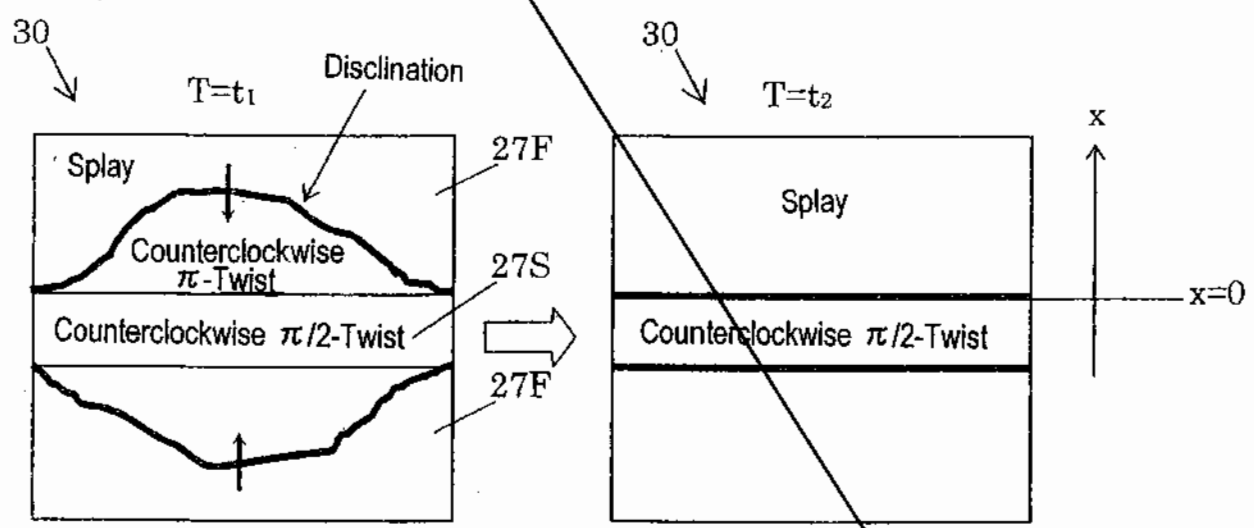
30
T=t1
Disclination
Splay
27F
Counterclockwise π-Twist
27S
Counterclockwise π/2-Twist
27F
30
T=t2
Splay
Counterclockwise π/2-Twist
x
x=0

FIG.23

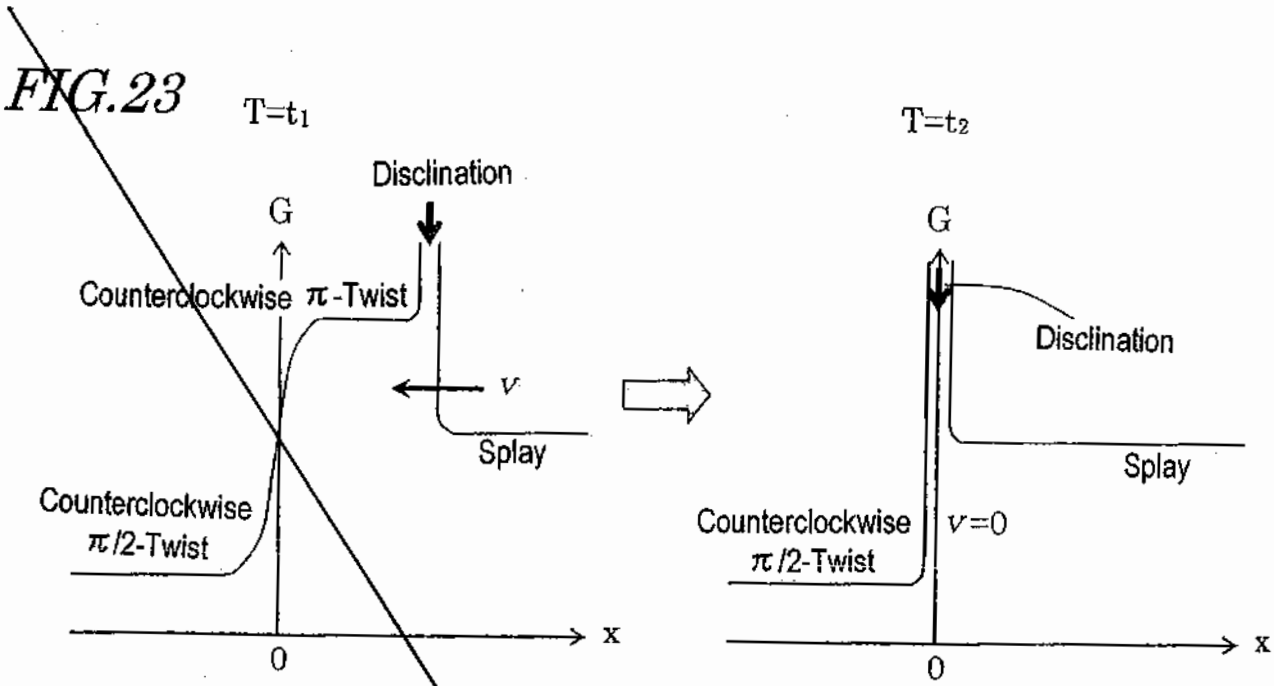
T=t1
Disclination
G
Counterclockwise π-Twist
v
Splay
Counterclockwise
π/2-Twist
x
0
T=t2
G
Disclination
Splay
Counterclockwise
π/2-Twist
v=0
x
0

FIG.24

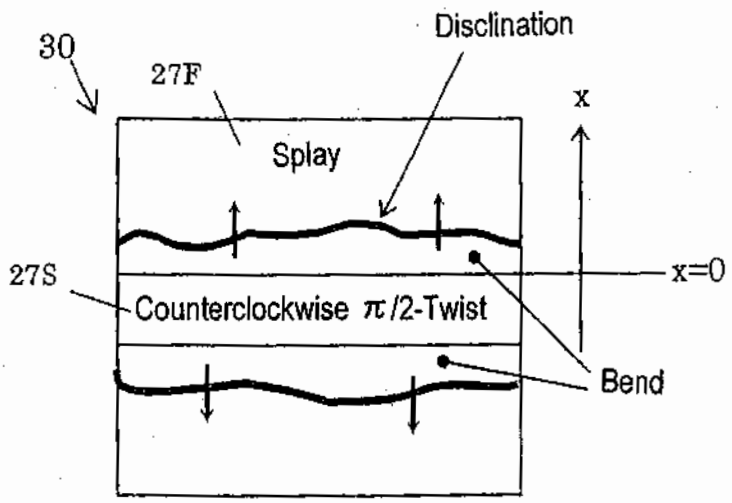
30
27F
Disclination
x
Splay
27S
x=0
Counterclockwise π/2-Twist
Bend

FIG.25

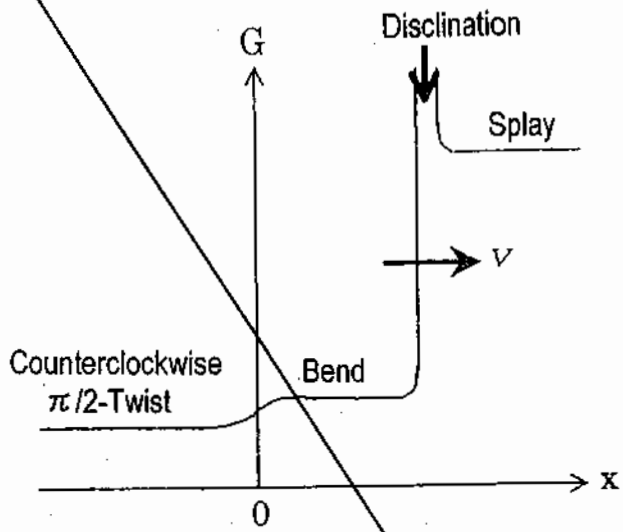
G
Disclination
Splay
V
Counterclockwise
π/2-Twist
Bend
x
0

FIG.26

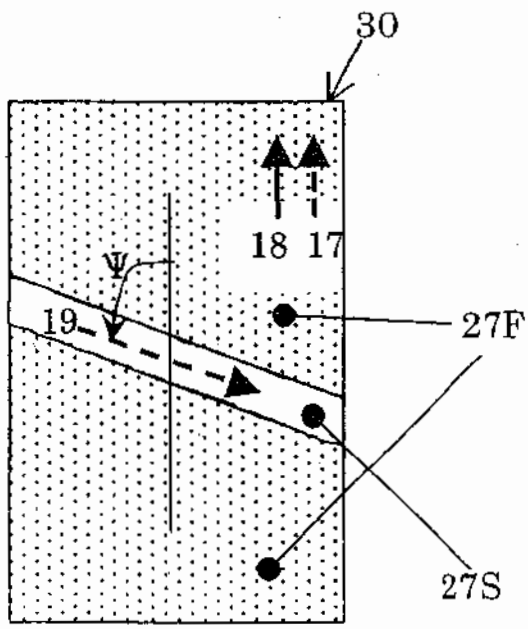
30
18
17
Ψ
19
27F
27S

FIG.27

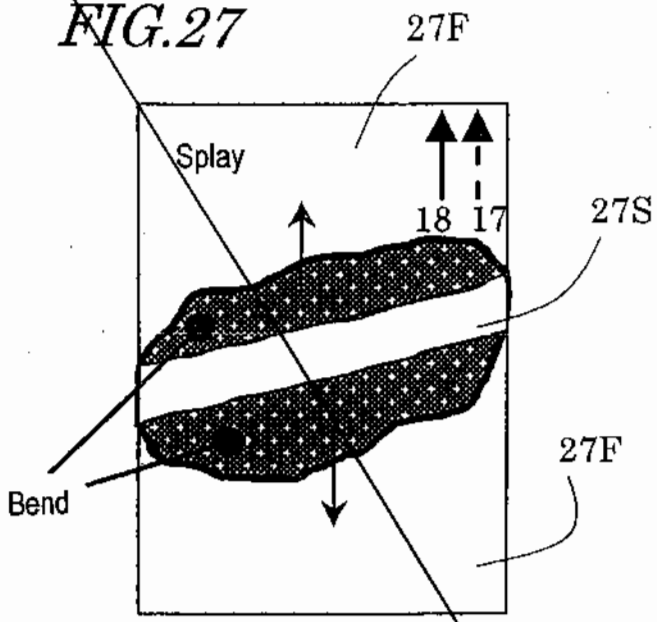

FIG.28

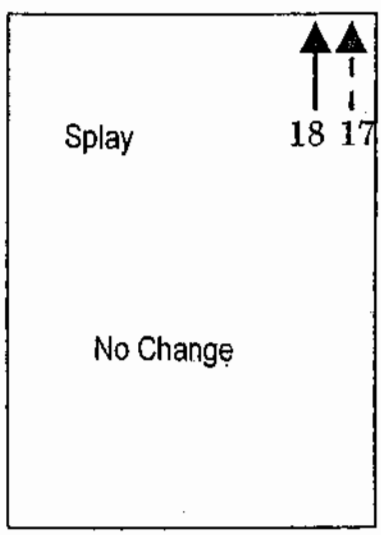

FIG.29

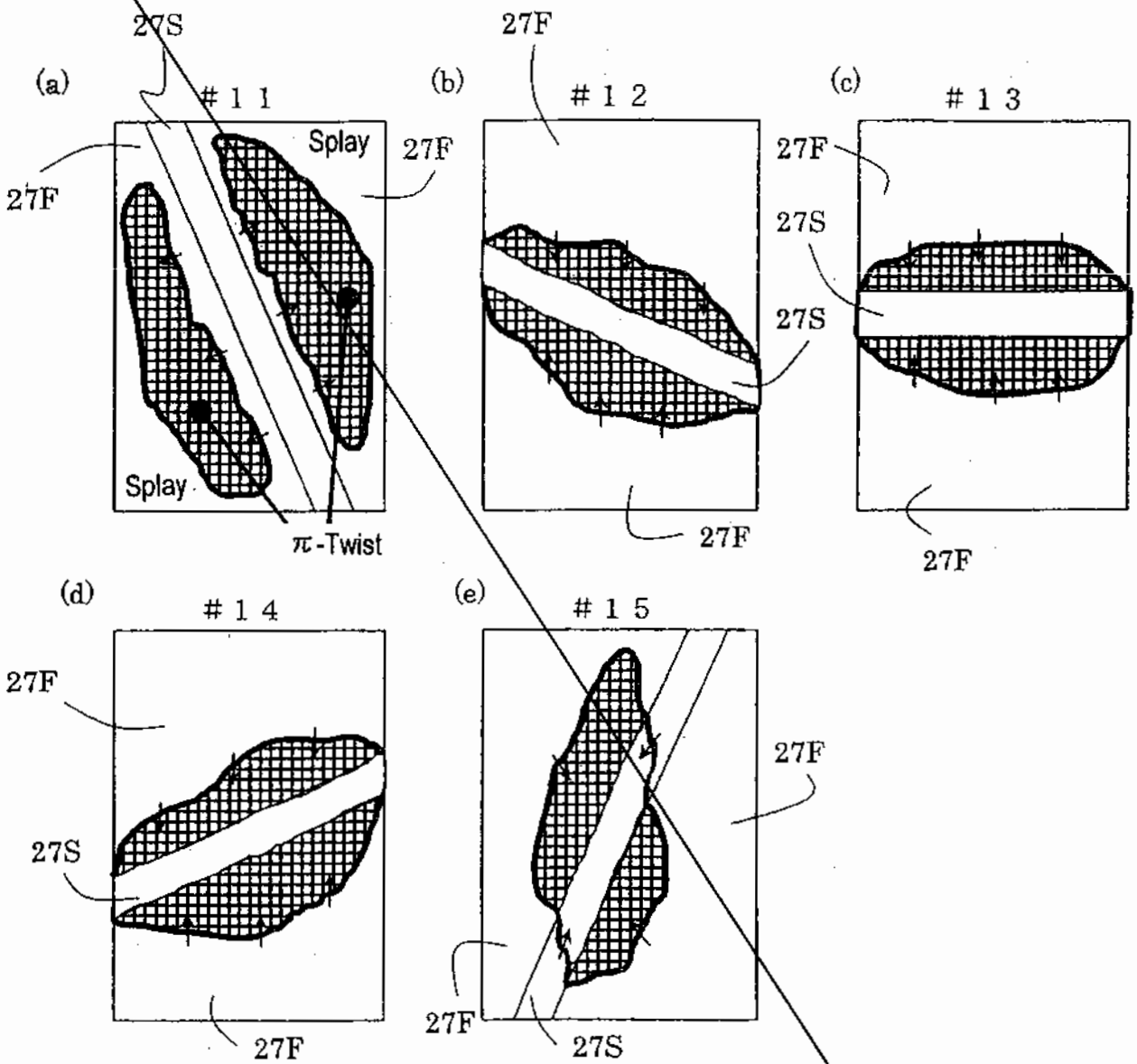
(a)
#11
27S
27F
Splay
27F
Splay
π-Twist
(b)
#12
27F
27F
(c)
#13
27F
27S
27S
27F
(d)
#14
27F
27S
27F
(e)
#15
27F
27F
27S

FIG.30

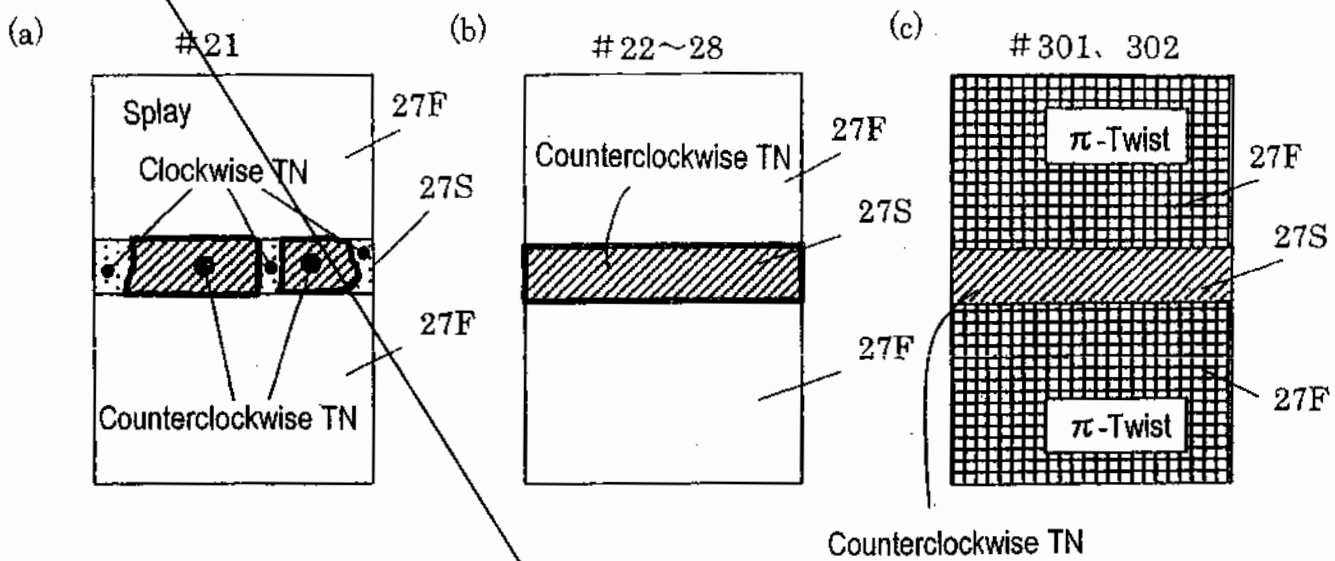
(a)
#21
Splay
Clockwise TN
Counterclockwise TN
27F
27S
27F
(b)
#22～28
Counterclockwise TN
27F
27S
27F
(c)
#301、302
π-Twist
π-Twist
27F
27S
27F
Counterclockwise TN

FIG.31

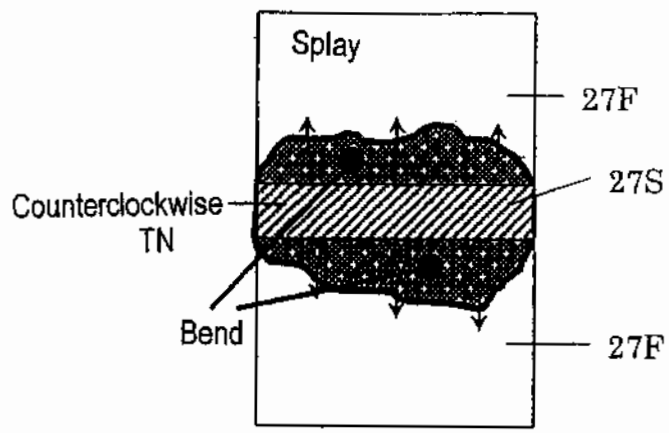
Splay
27F
27S
Counterclockwise TN
Bend
27F

FIG.32

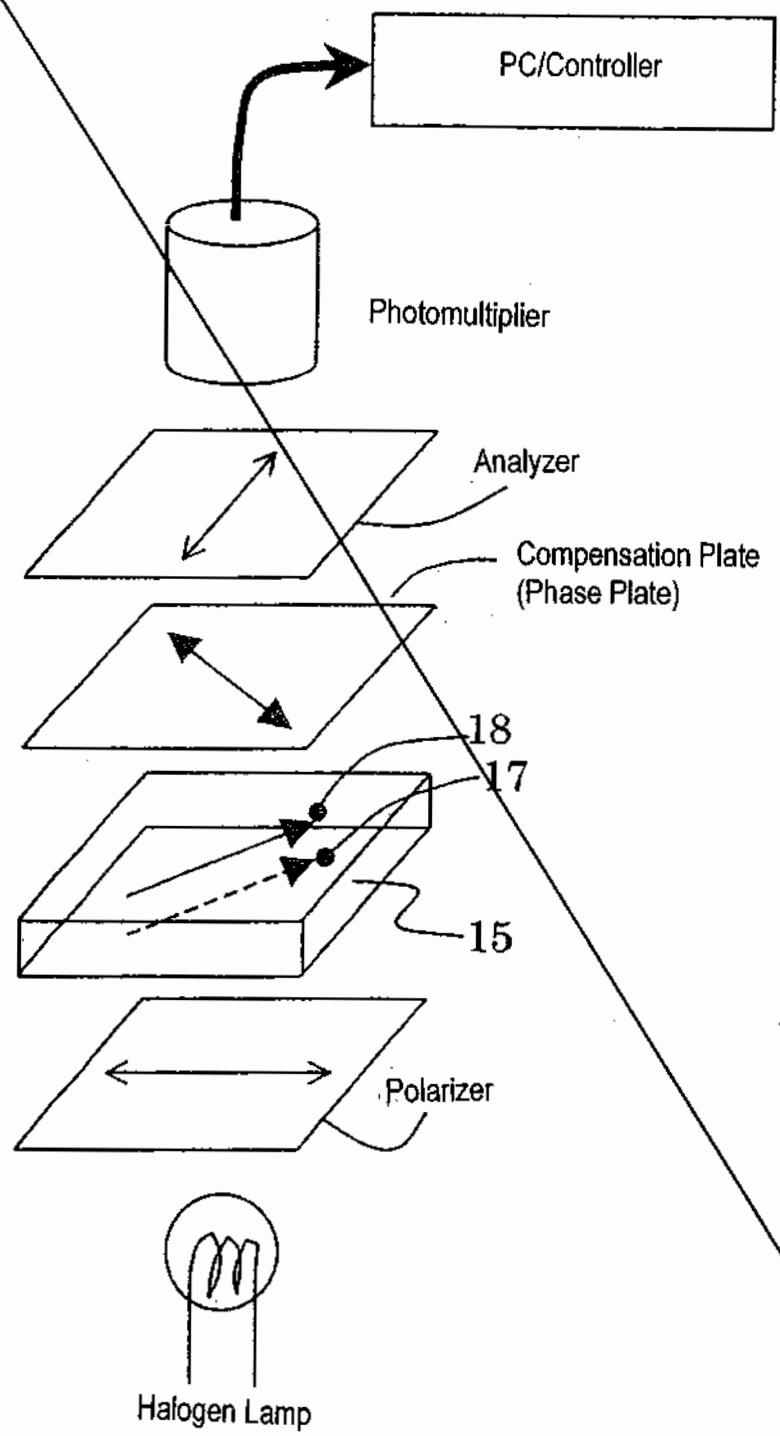
PC/Controller
Photomultiplier
Analyzer
Compensation Plate
(Phase Plate)
18
17
15
Polarizer
Halogen Lamp

FIG.33

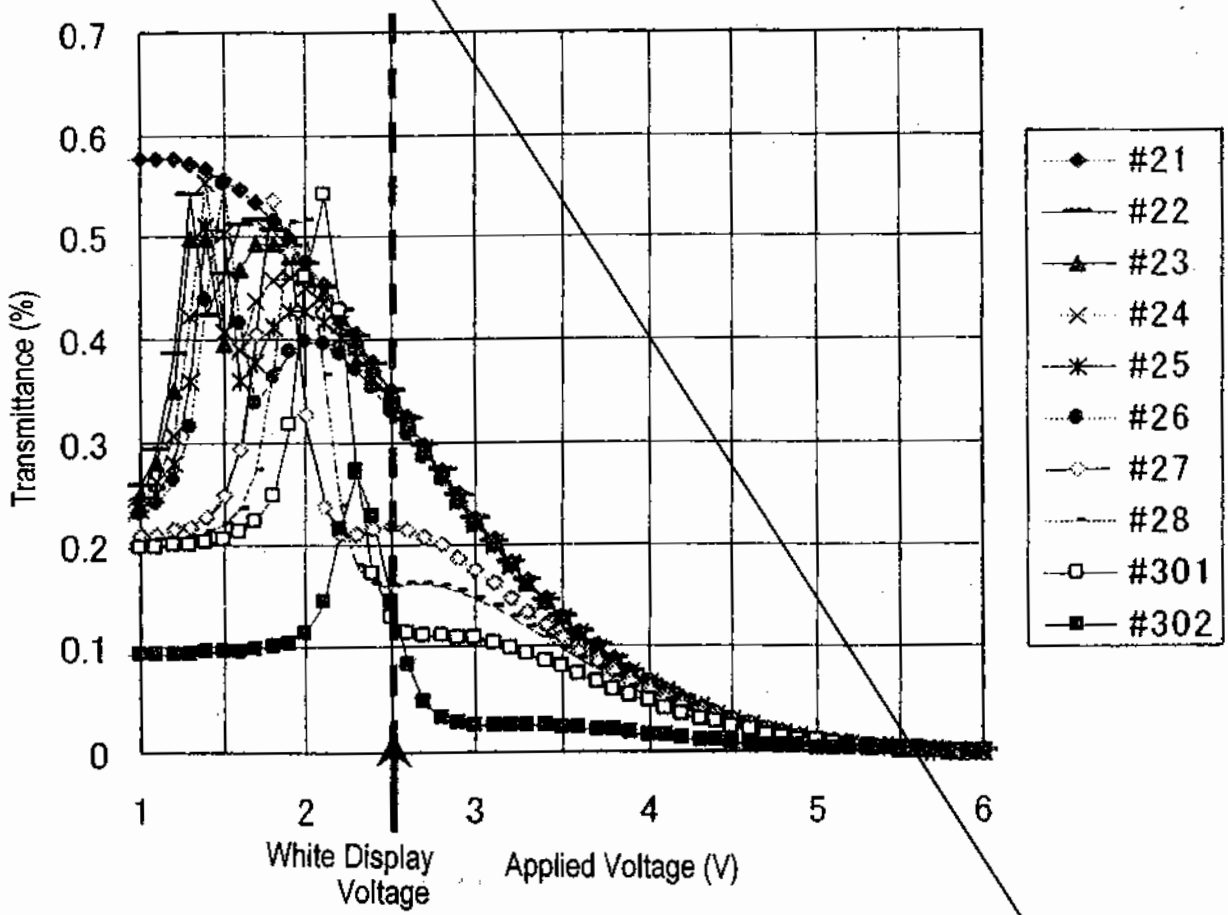
0.7
0.6
0.5
0.4
0.3
0.2
0.1
0
Transmittance (%)
1
2
3
4
5
6
White Display Voltage
Applied Voltage (V)
#21
#22
#23
#24
#25
#26
#27
#28
#301
#302

FIG.34

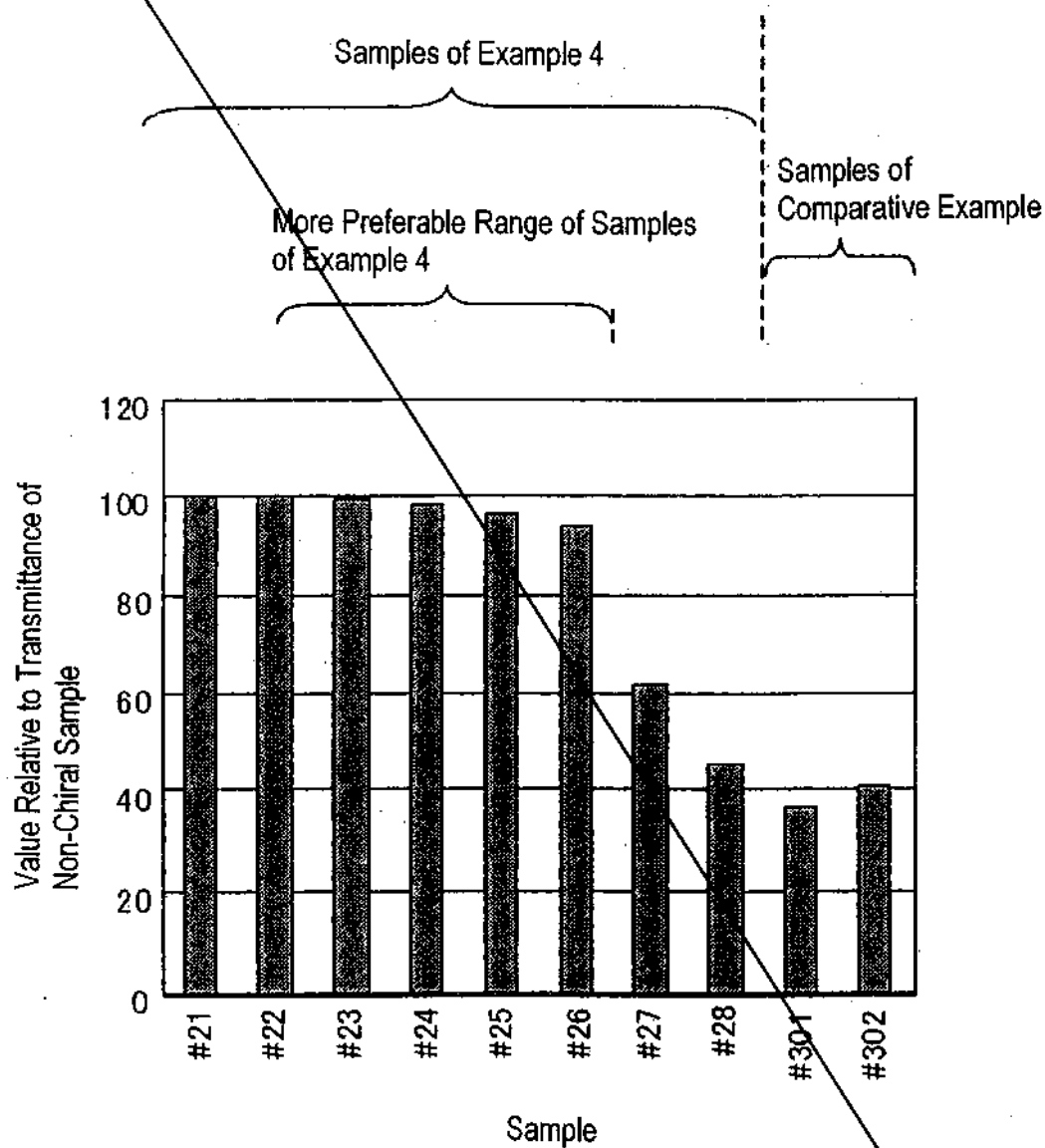
Samples of Example 4
Samples of Comparative Example
More Preferable Range of Samples of Example 4
Value Relative to Transmittance of Non-Chiral Sample
120
100
80
60
40
20
0
#21
#22
#23
#24
#25
#26
#27
#28
#301
#302
Sample

FIG.35

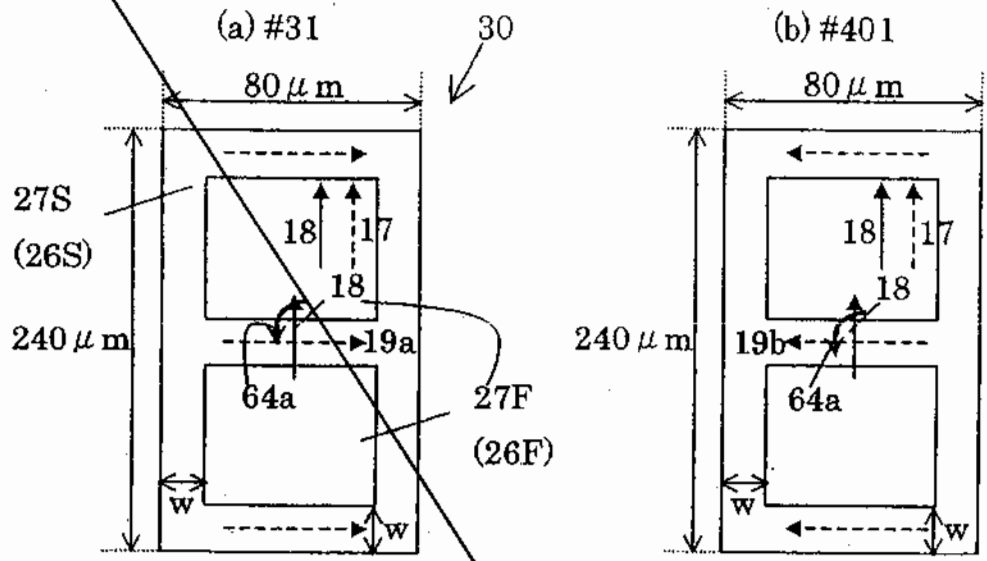
(a) #31
30
80 μm
27S
(26S)
18
17
18
240 μm
19a
64a
27F
(26F)
w
w
(b) #401
80 μm
18
17
18
240 μm
19b
64a
w
w

FIG.36

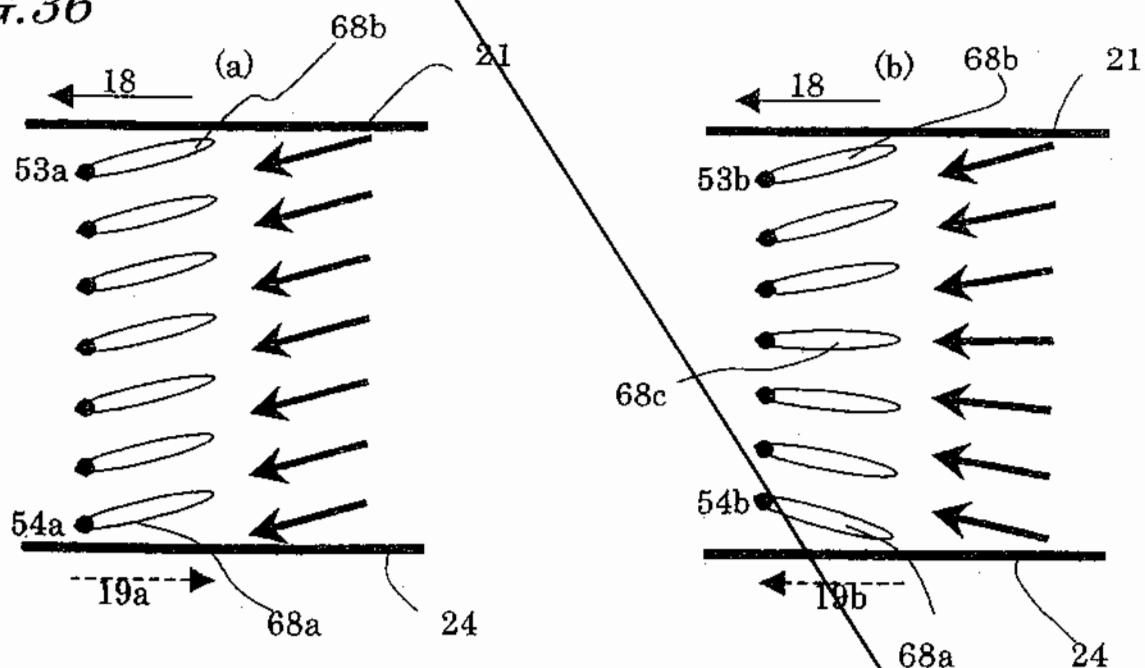
(a)
68b
21
18
53a
54a
19a
68a
24
(b)
68b
21
18
53b
68c
54b
19b
68a
24

FIG.37

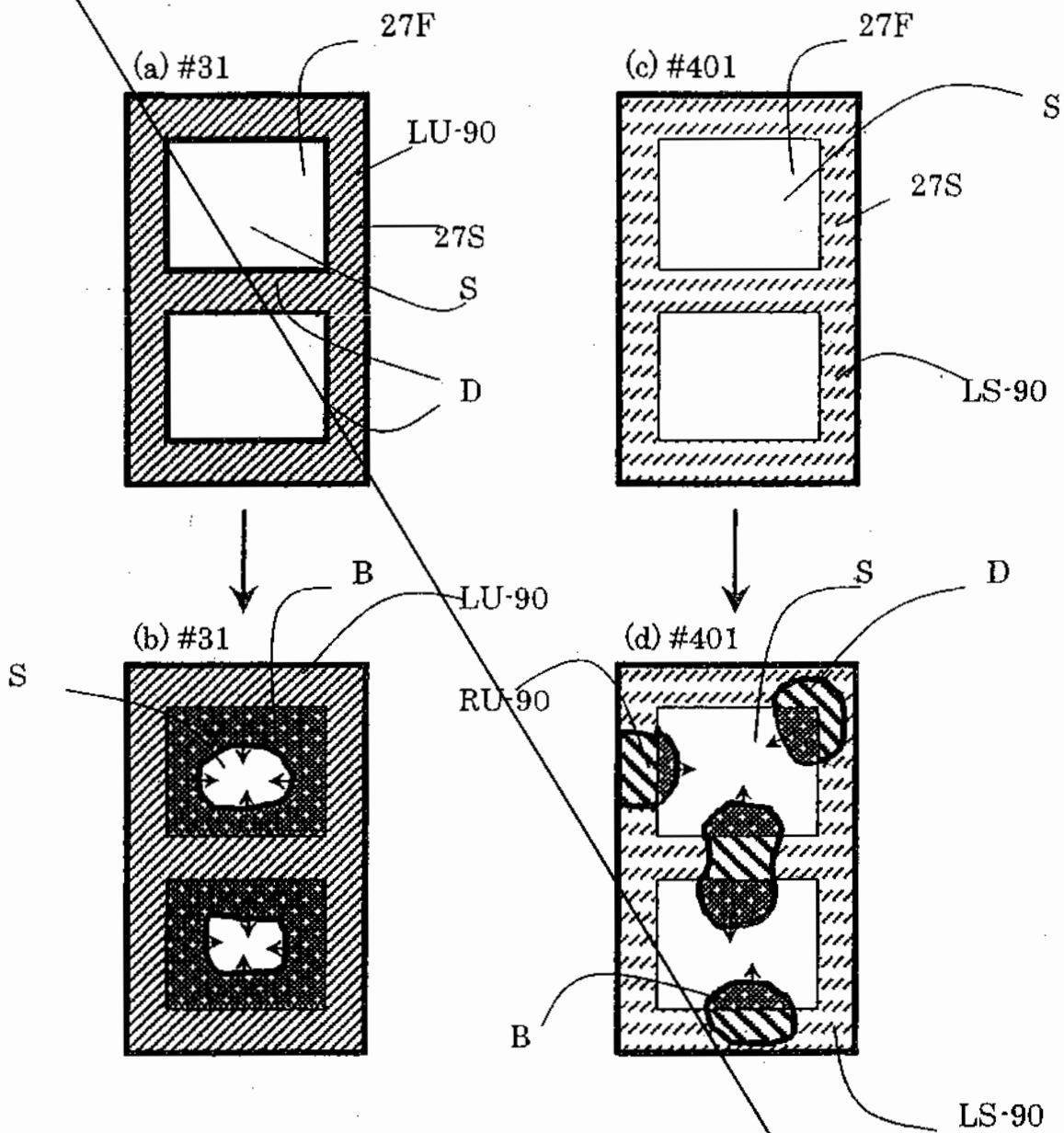
(a) #31
27F
LU-90
27S
S
D
(b) #31
B
LU-90
S
(c) #401
27F
S
27S
LS-90
(d) #401
S
D
RU-90
B
LS-90

FIG.38

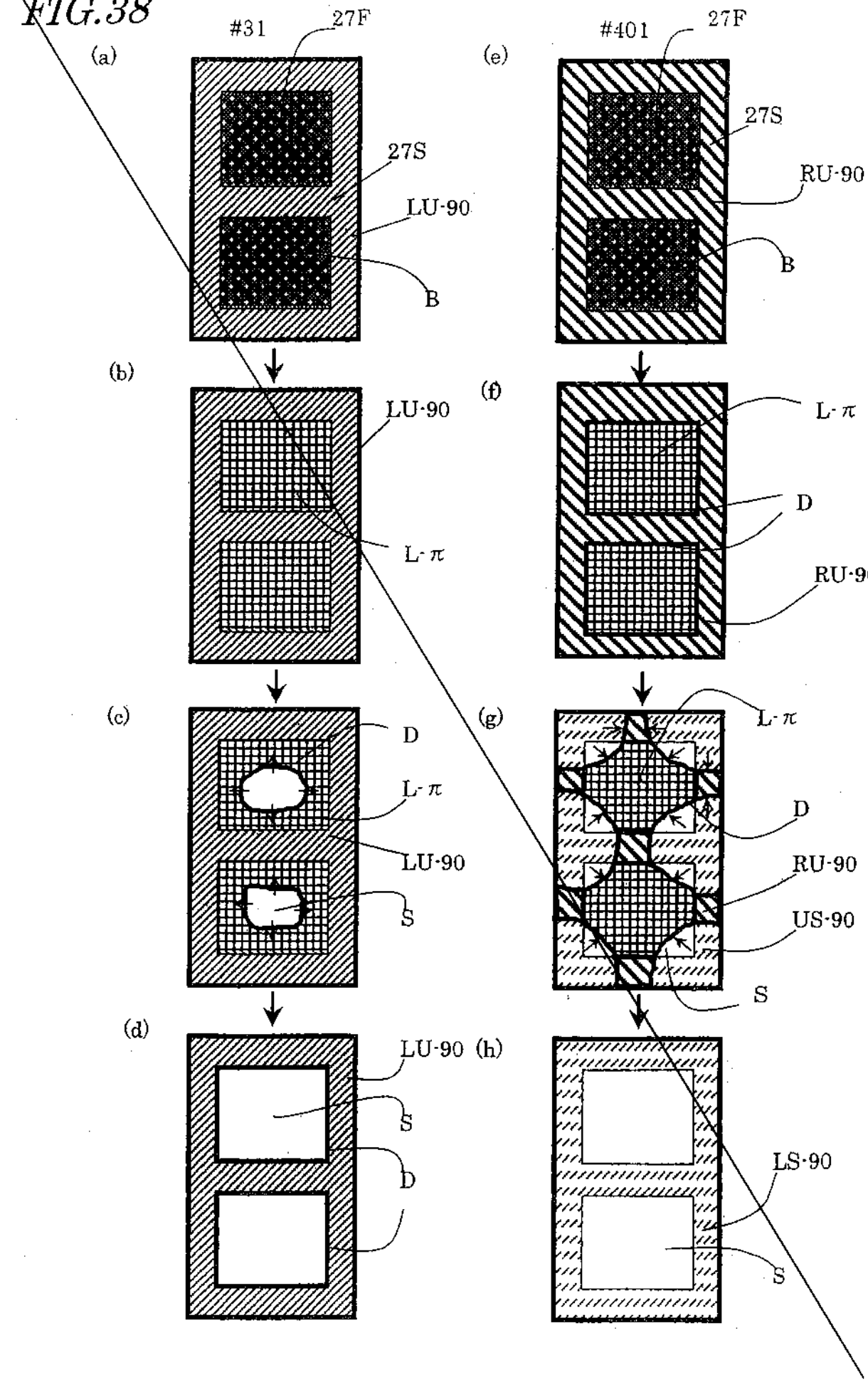
#31
27F
(a)
27S
LU-90
B
(b)
LU-90
L-π
(c)
D
L-π
LU-90
S
(d)
LU-90
S
D
#401
27F
(e)
27S
RU-90
B
(f)
L-π
D
RU-90
(g)
L-π
D
RU-90
US-90
S
(h)
LS-90
S

FIG. 1

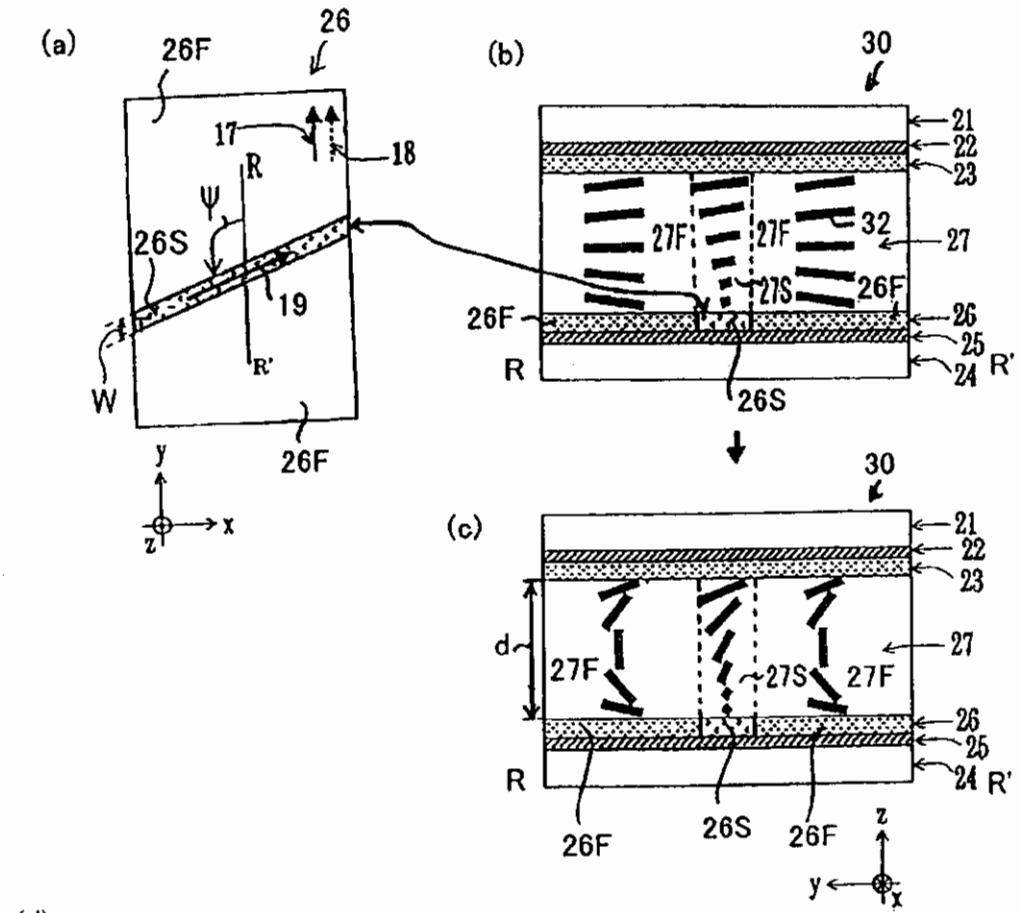
(a)
26
26F
17
18
R
Ψ
26S
19
R'
W
26F
y
x
z
(b)
30
21
22
23
27F
27F
32
27
27S
26F
26F
26
25
R
24
R'
26S
(c)
30
21
22
23
d
27F
27S
27F
27
26
25
R
24
R'
26F
26S
26F
z
y
x
(d)
z
32
y
θ
Ψ
x

FIG.2

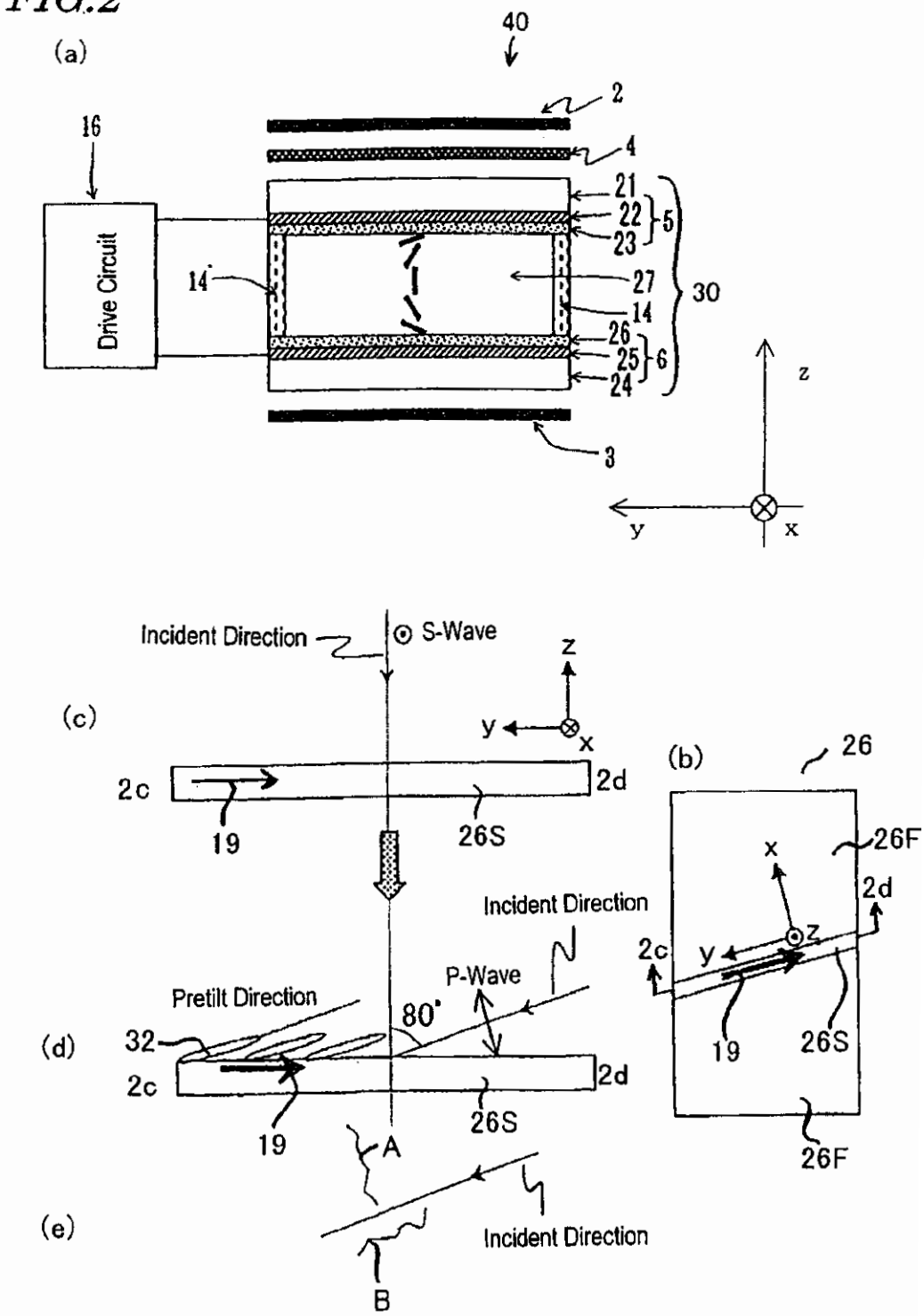
(a)
40
2
16
4
21
22
23
5
Drive Circuit
14
27
30
14
26
25
6
24
3
z
y
x
Incident Direction
S-Wave
(c)
z
y
x
2c
2d
19
26S
(b)
26
26F
x
2d
Incident Direction
z
2c
y
P-Wave
Pretilt Direction
80°
(d)
32
2c
2d
19
26S
A
19
26S
26F
(e)
Incident Direction
B

FIG.3

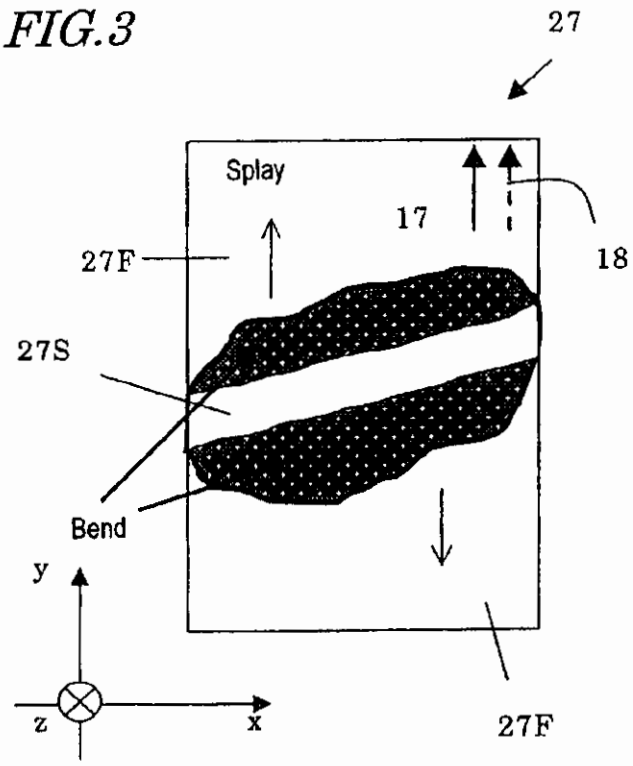

FIG.4

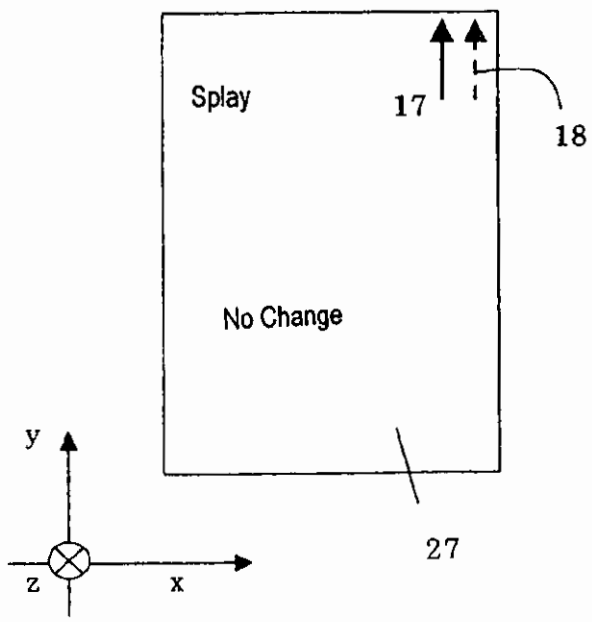

FIG.5

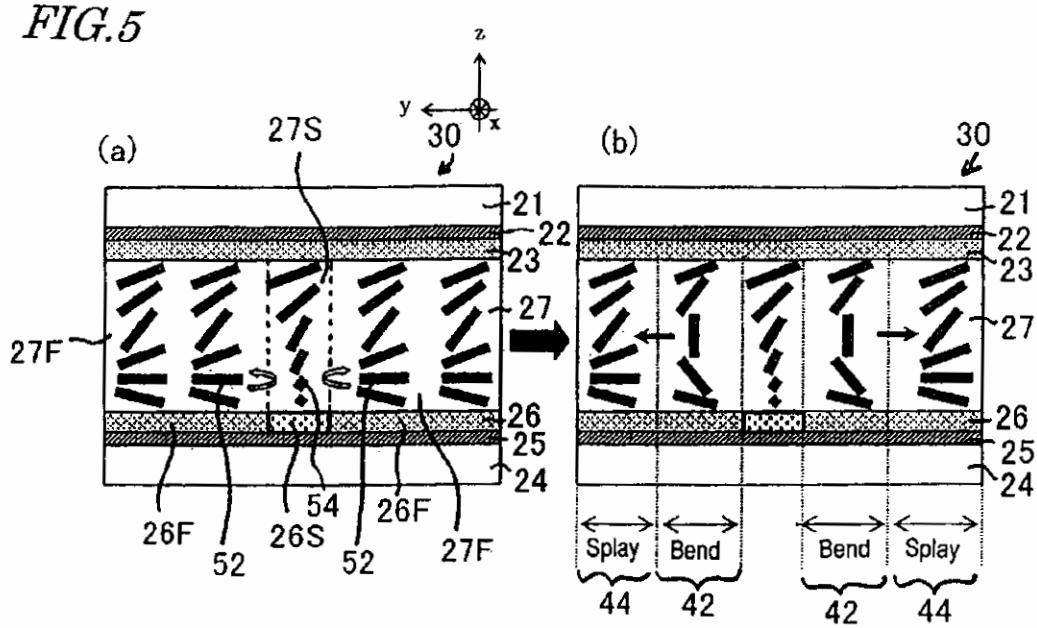
z
y
x
(a)
27S
30
21
22
23
27
27F
26
25
24
26F
52
54
26S
52
26F
27F
(b)
30
21
22
23
27
26
25
24
Splay
Bend
Bend
Splay
44
42
42
44

FIG.6

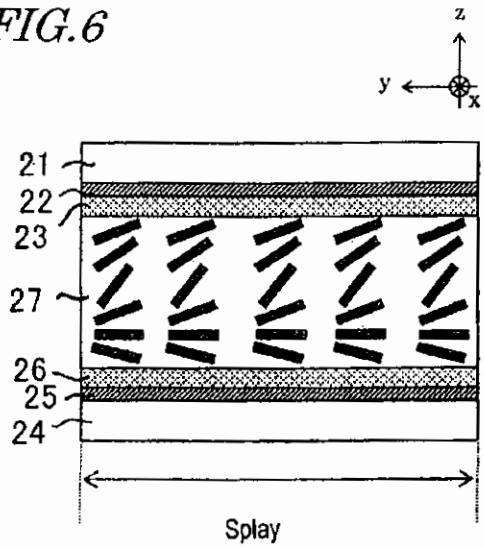
z
y
x
21
22
23
27
26
25
24
Splay

FIG. 7

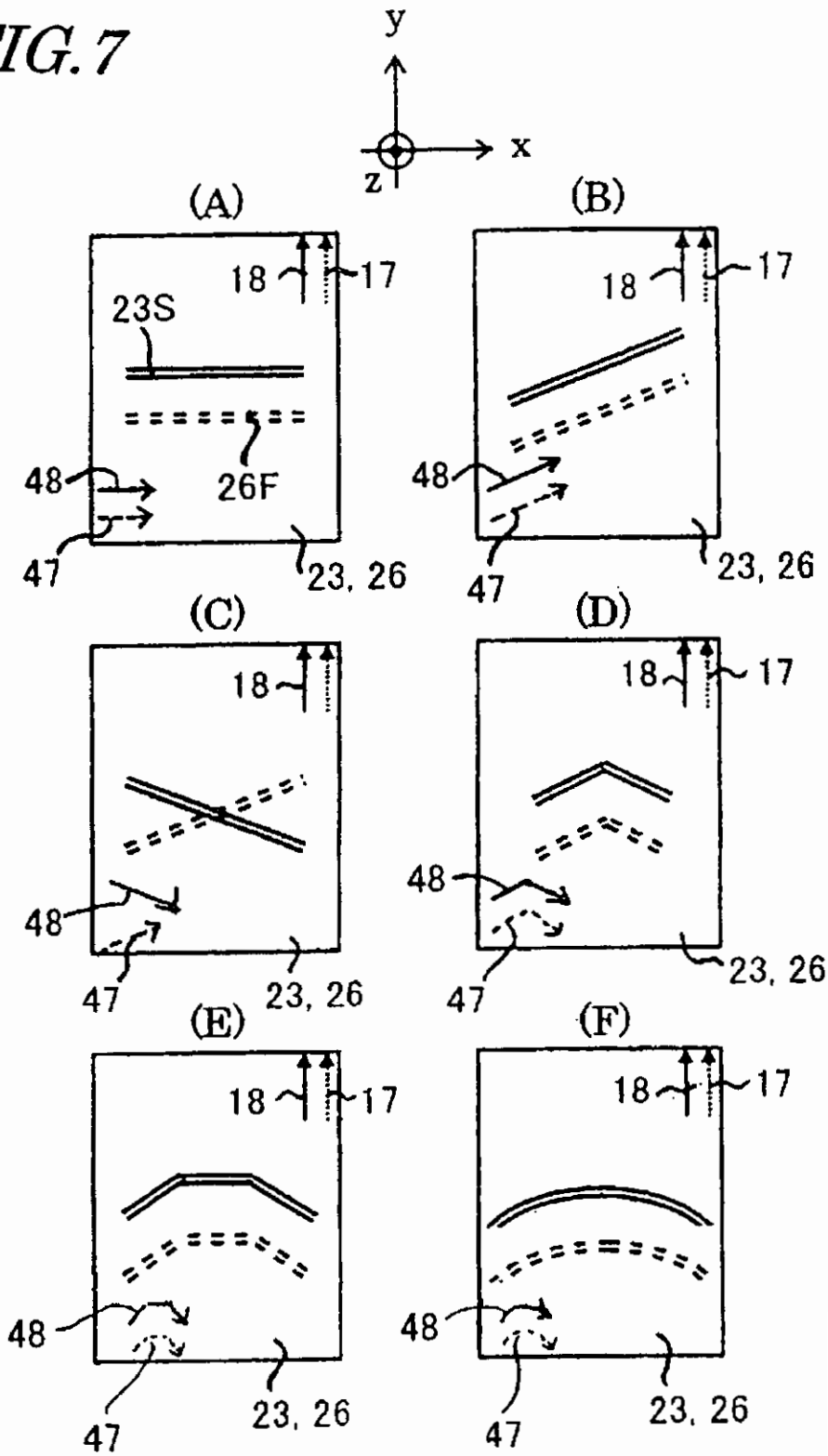
y
x
z
(A)
18
17
23S
48
26F
47
23, 26
(B)
18
17
48
47
23, 26
(C)
18
48
47
23, 26
(D)
18
17
48
47
23, 26
(E)
18
17
48
47
23, 26
(F)
18
17
48
47
23, 26

FIG.8

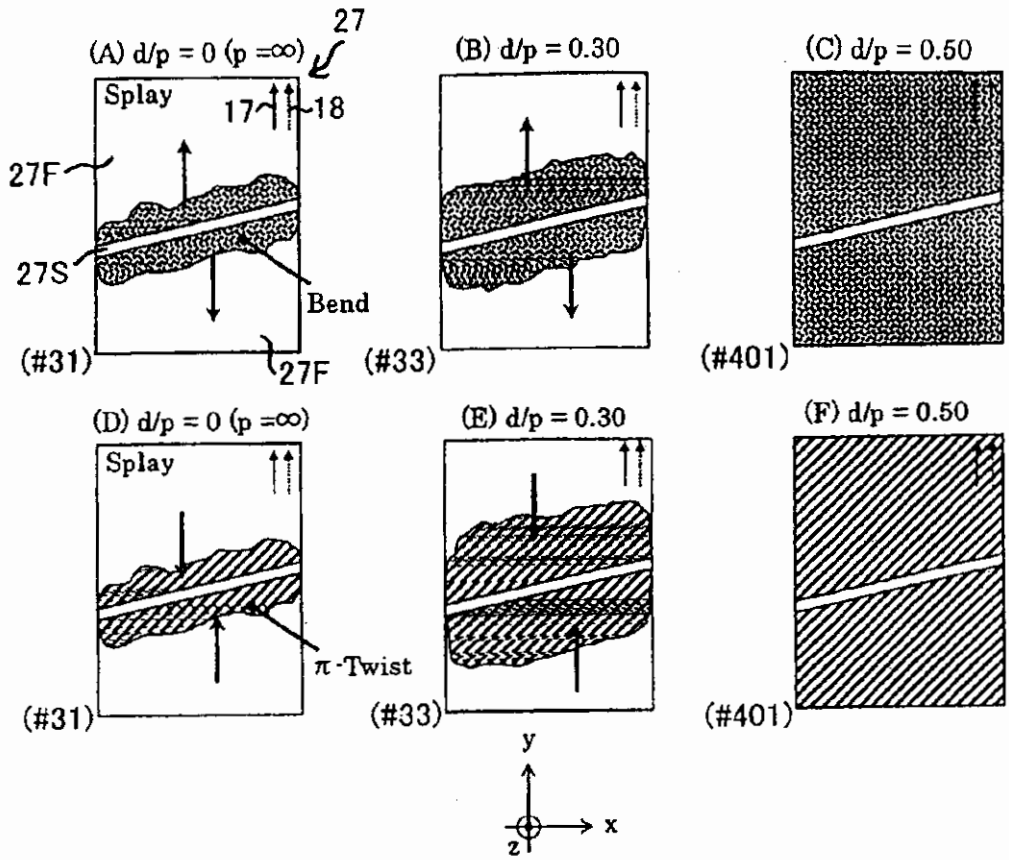
(A) d/p = 0 (p =∞)
27
Splay
17
18
27F
27S
Bend
(#31)
27F
(B) d/p = 0.30
(#33)
(C) d/p = 0.50
(#401)
(D) d/p = 0 (p =∞)
Splay
π-Twist
(#31)
(E) d/p = 0.30
(#33)
(F) d/p = 0.50
(#401)
y
x
z

FIG.9

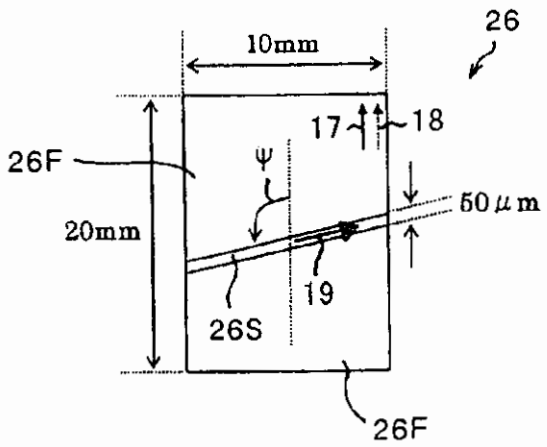
10mm
26
17
18
26F
Ψ
50 μm
20mm
19
26S
26F

FIG.10

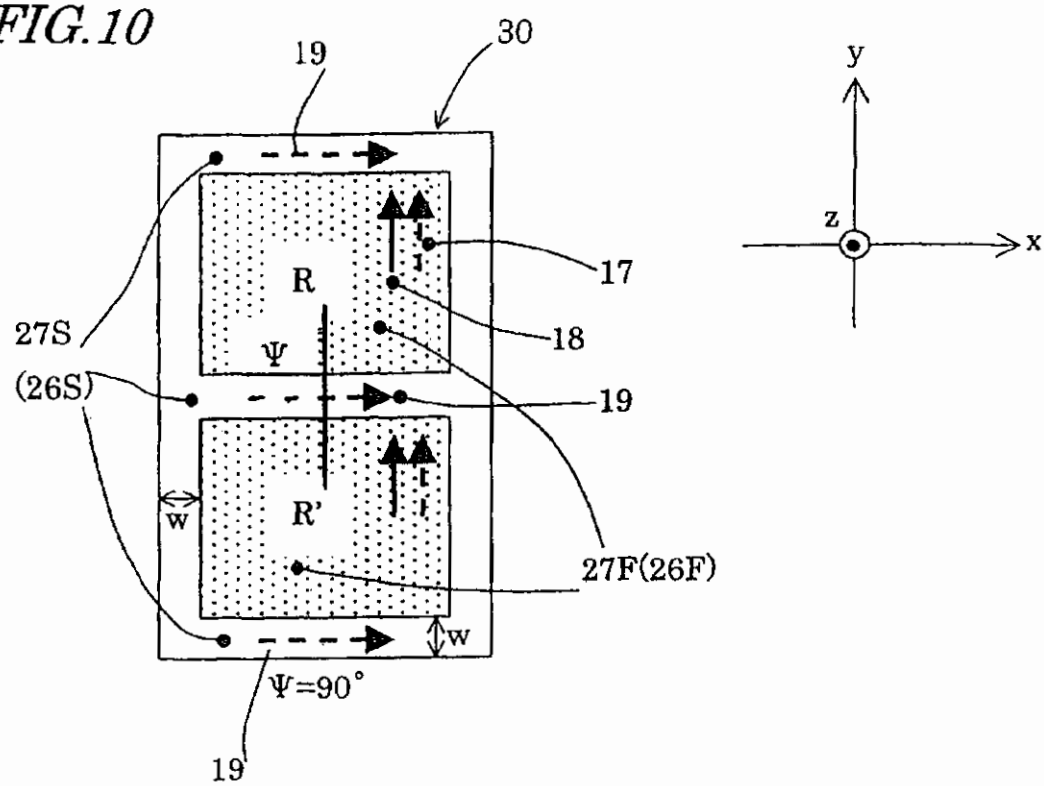

FIG. 11

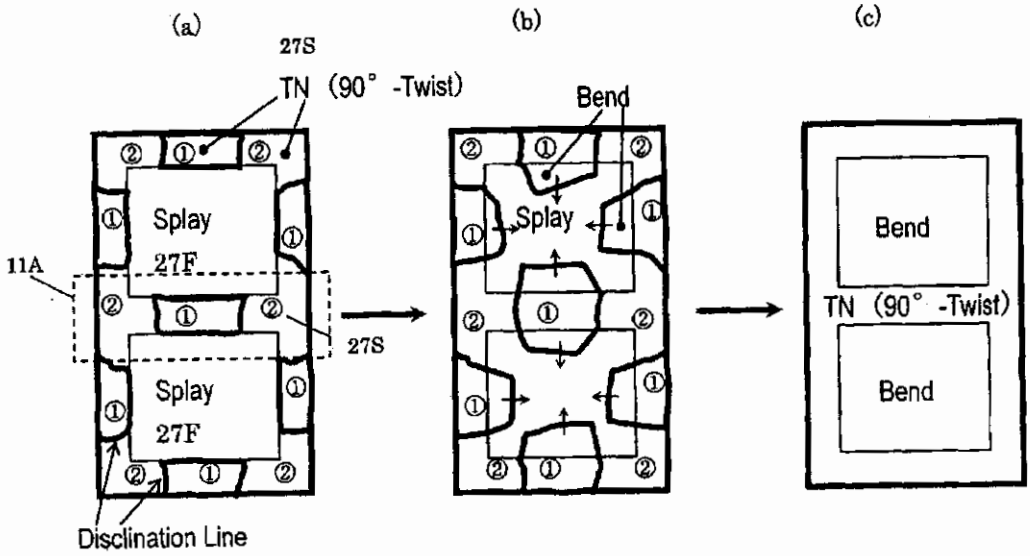
(a)
(b)
(c)
27S
TN (90° -Twist)
Bend
Splay
27F
11A
27S
Splay
27F
Disclination Line
Splay
Bend
TN (90° -Twist)
Bend

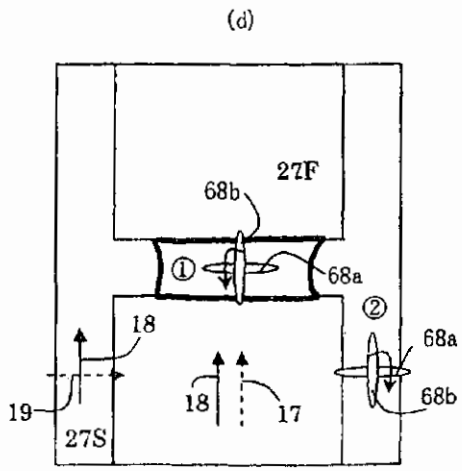
(d)
27F
68b
68a
18
19
27S
18
17
68a
68b

FIG. 12

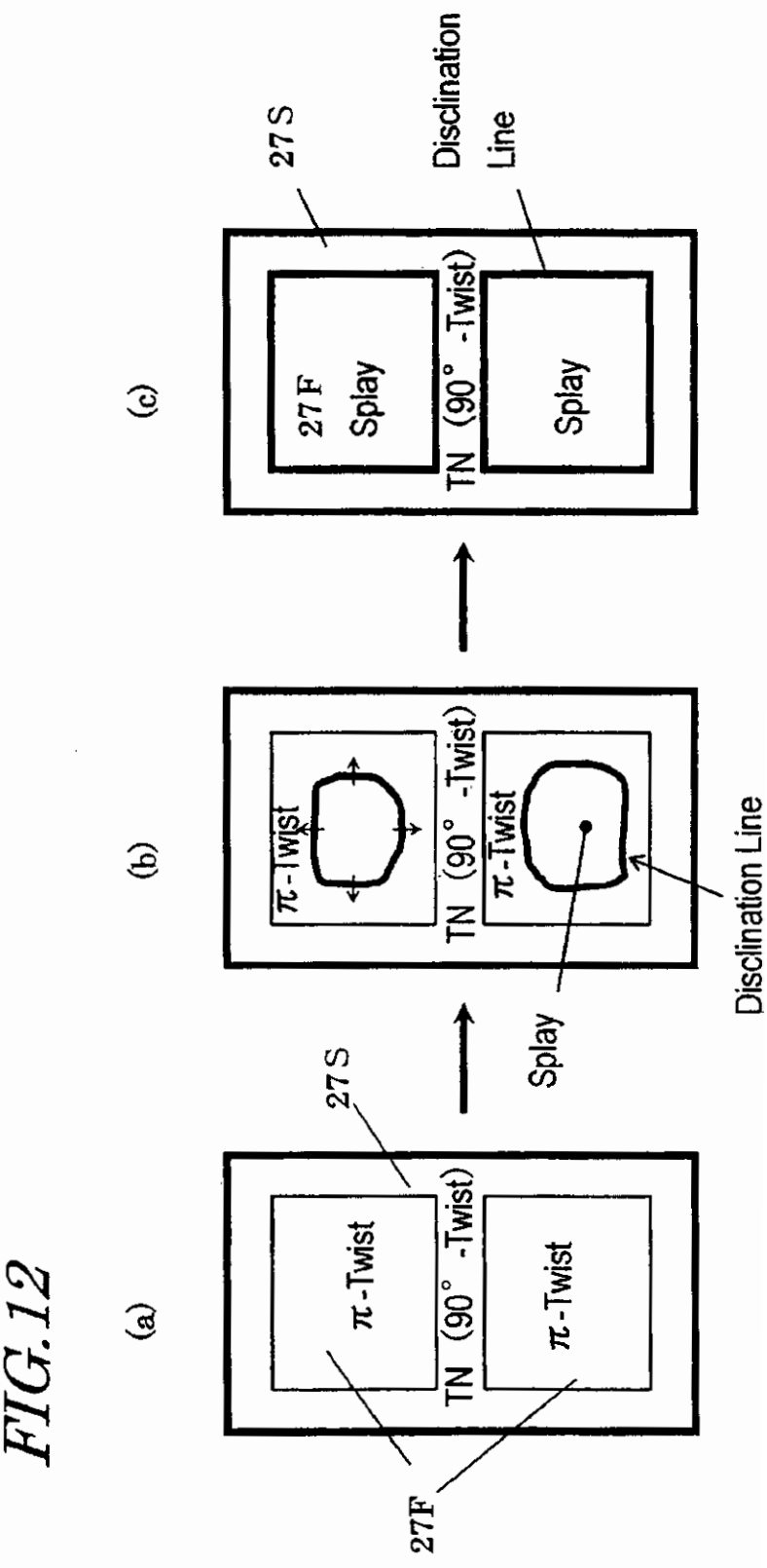
(a)
(b)
(c)
27S
27F
π-Twist
TN (90° -Twist)
π-Twist
Splay
Disclination Line
27 S
27 F
Splay
Disclination
Line
TN (90° -Twist)
Splay

FIG. 13

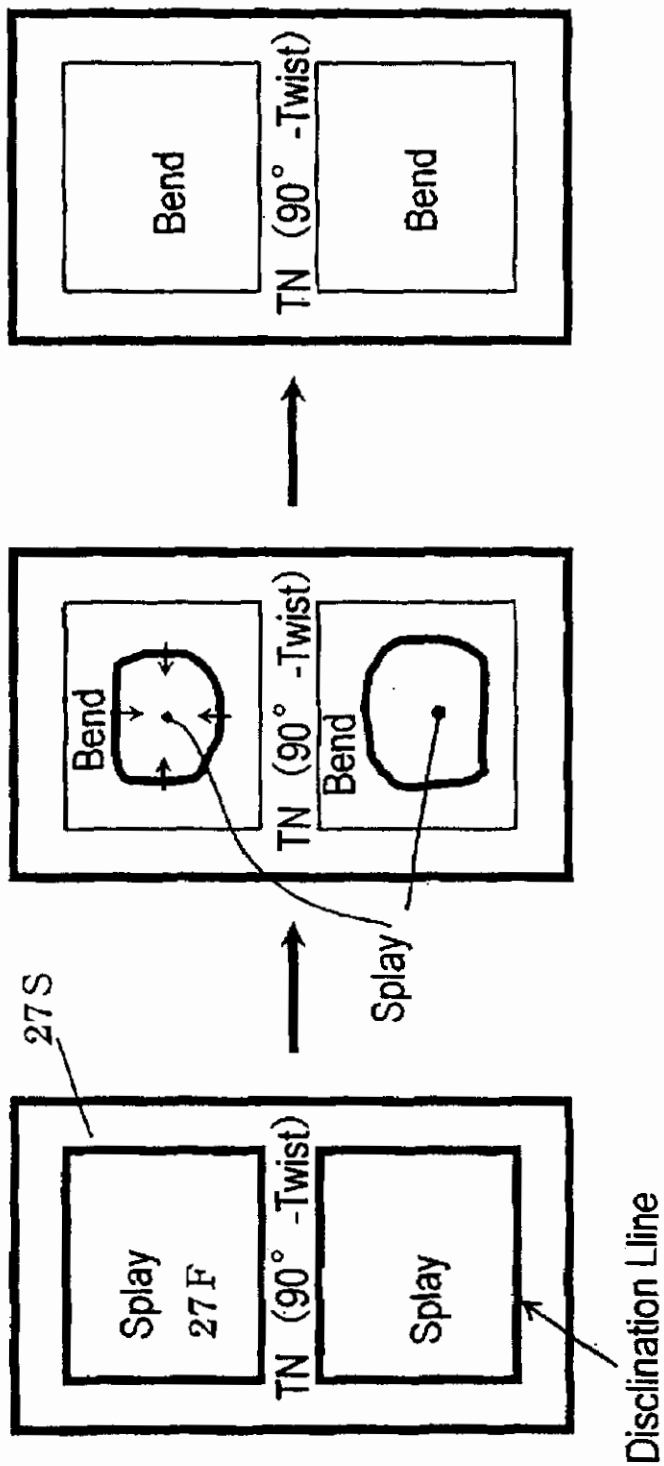
(a)
(b)
(c)
Splay
27F
27S
TN (90° -Twist)
Splay
Bend
Splay
Bend
TN (90° -Twist)
Bend
Bend
TN (90° -Twist)
Disclination Line

FIG.14

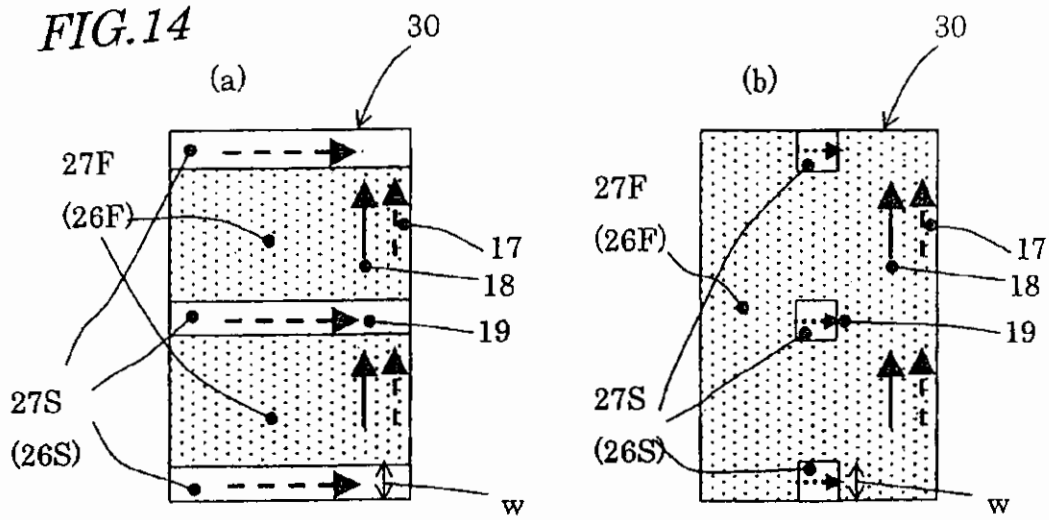

FIG.15

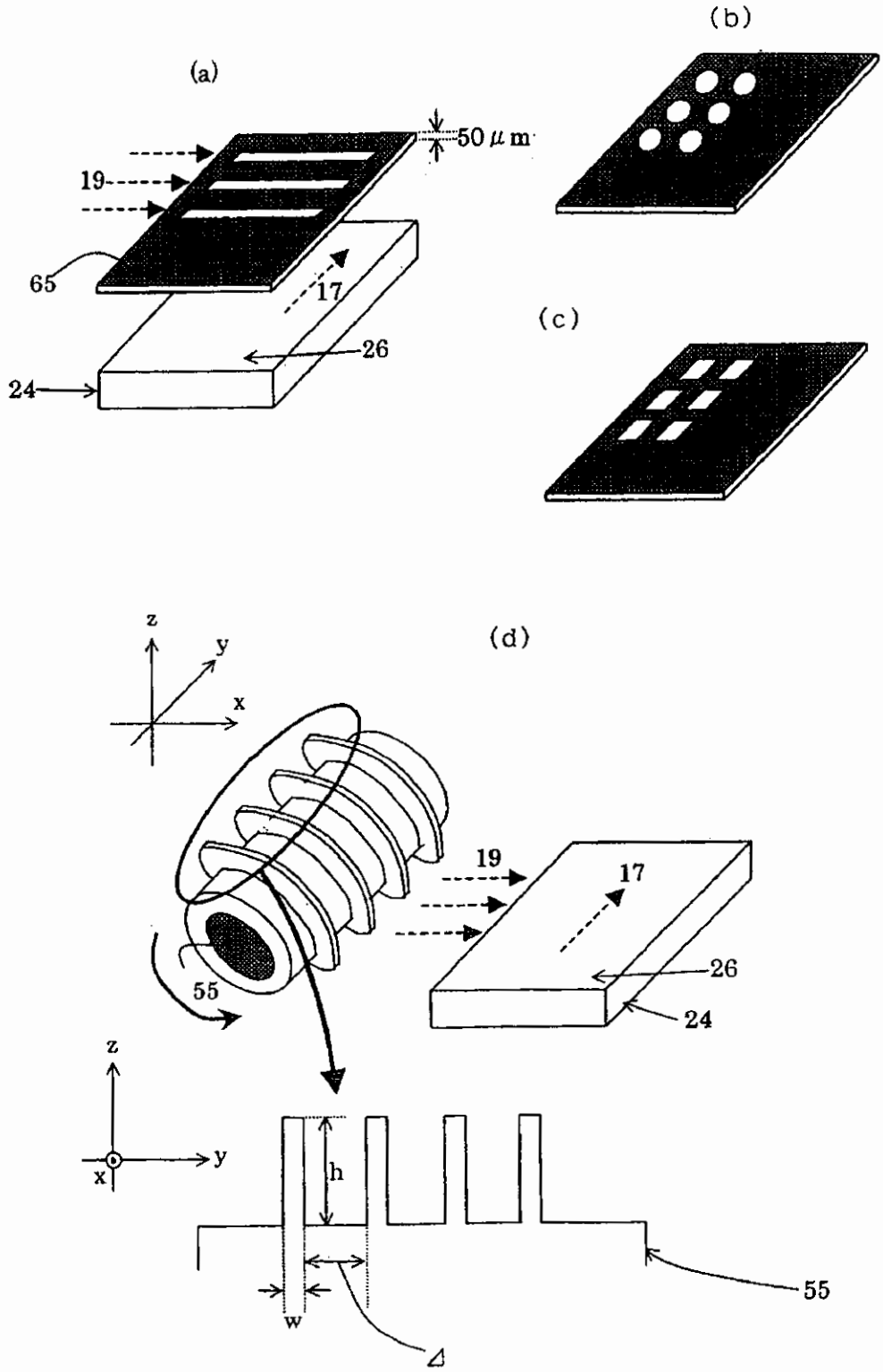

FIG.16

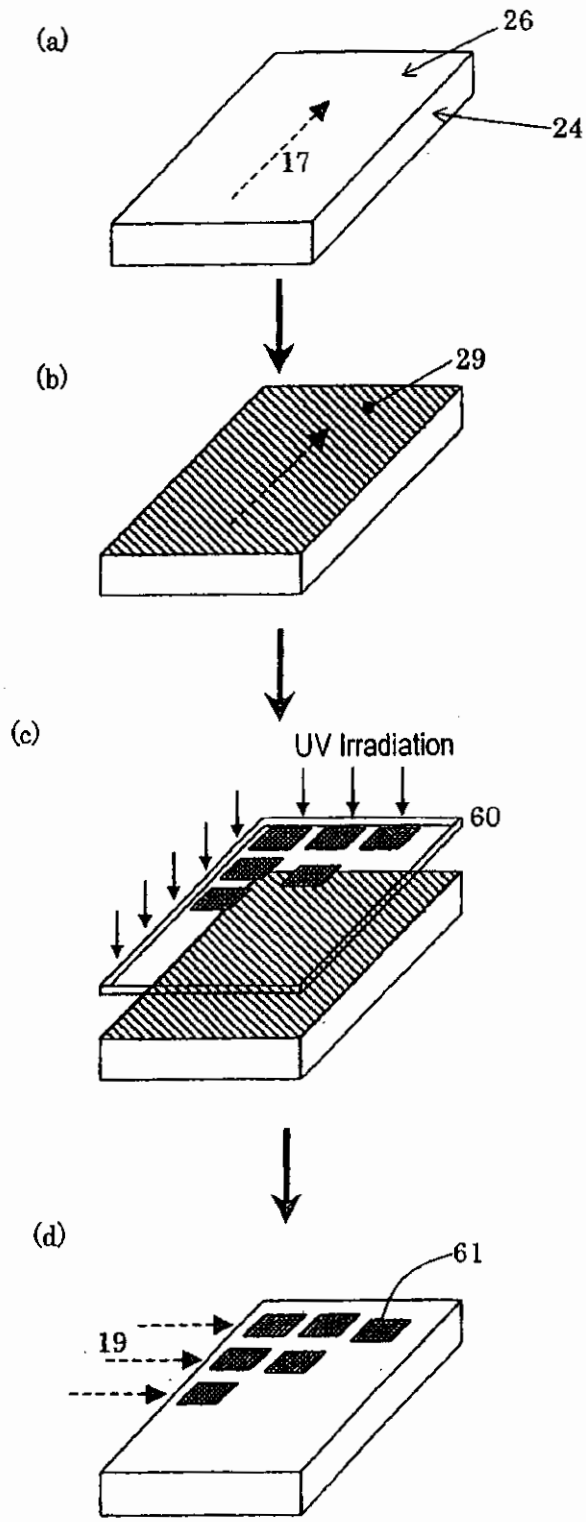

FIG.17

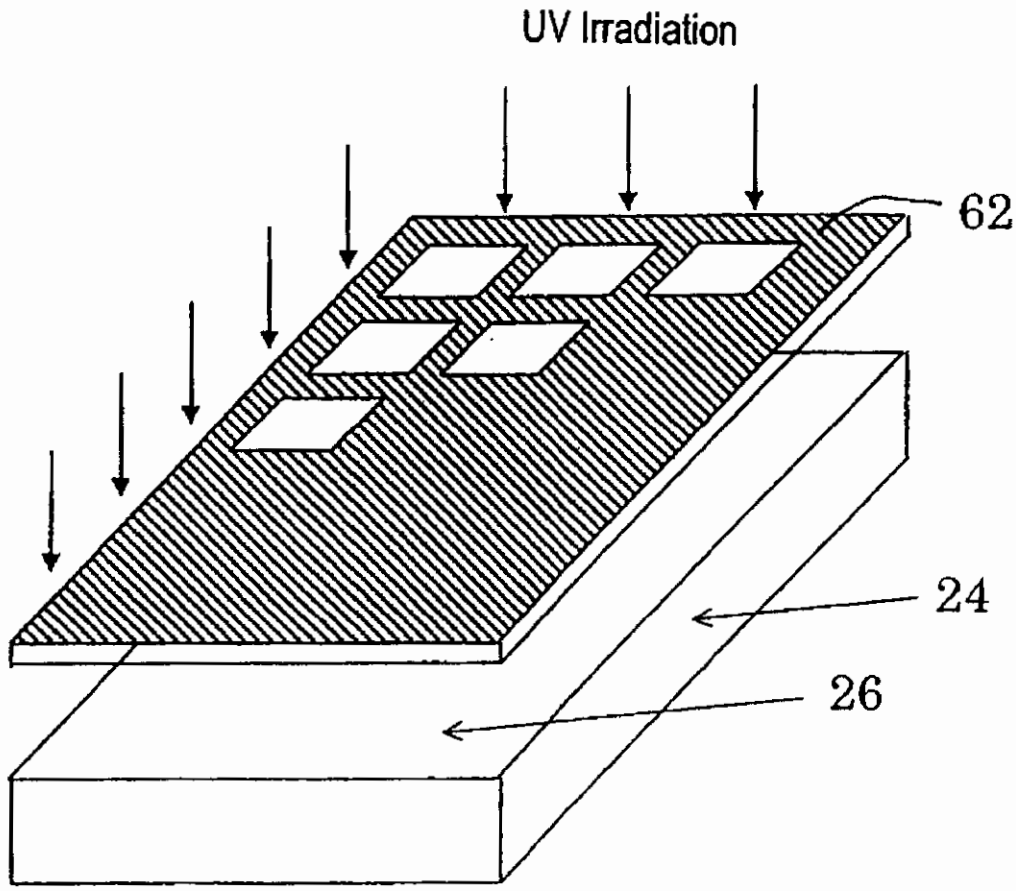

FIG. 18

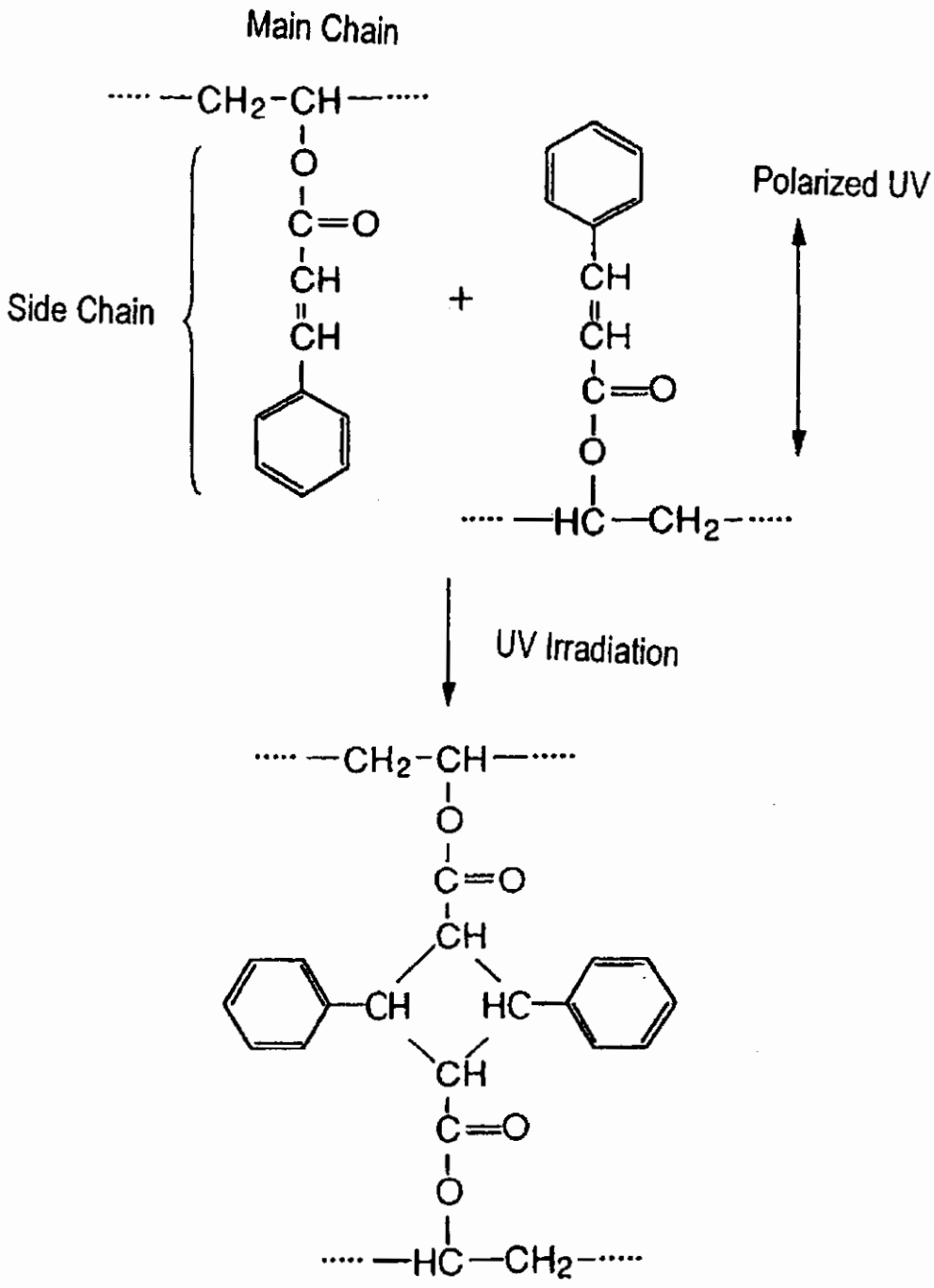

FIG.19

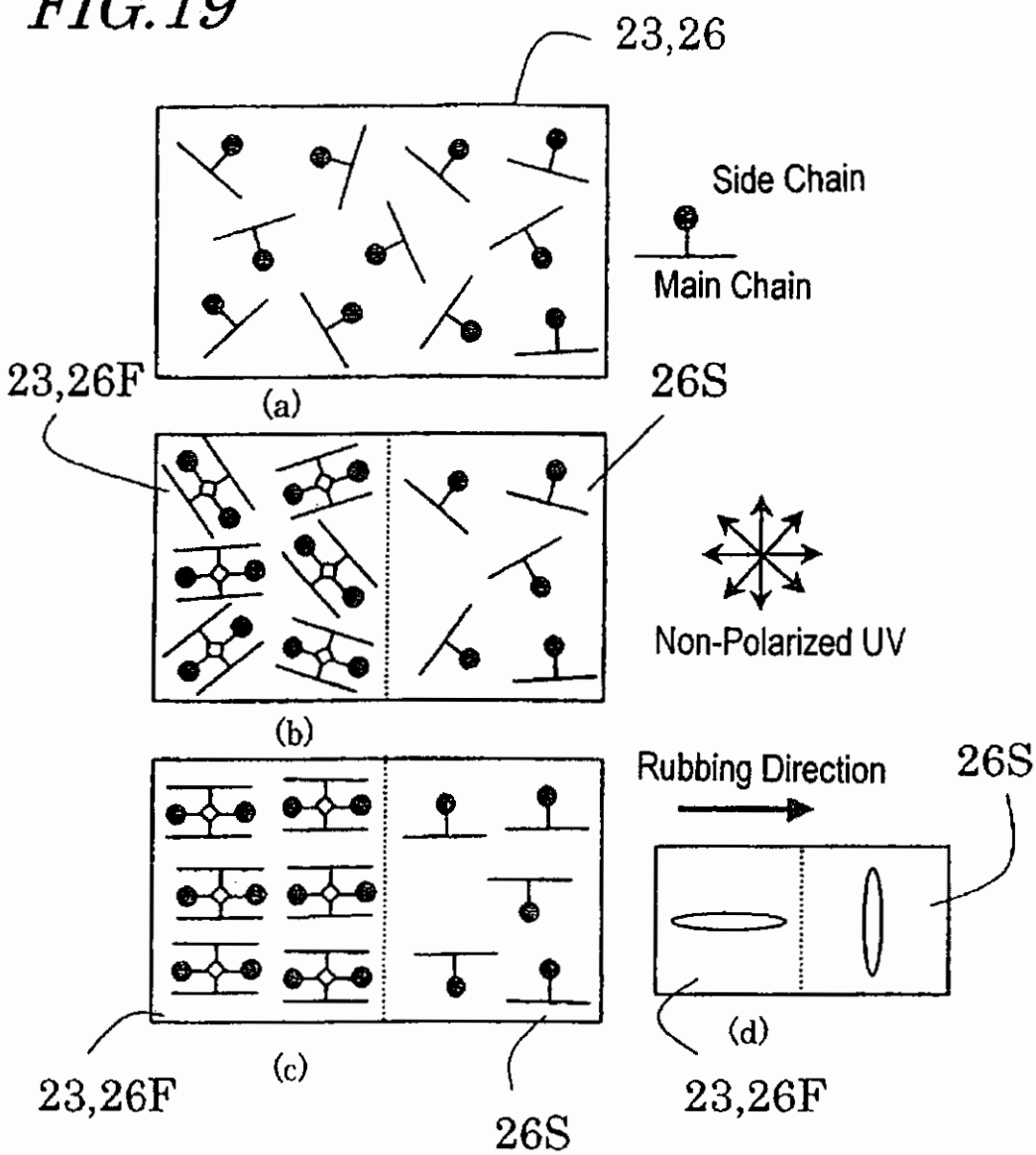
23,26
Side Chain
Main Chain
23,26F
26S
(a)
Non-Polarized UV
(b)
Rubbing Direction
26S
(d)
(c)
23,26F
26S
23,26F

FIG.20

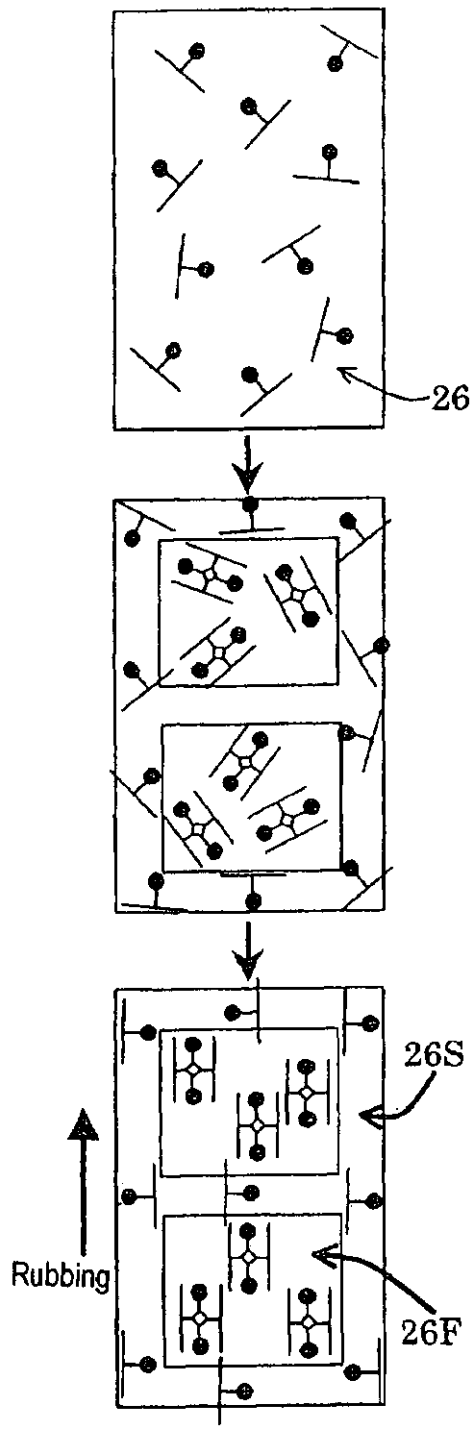

FIG.21

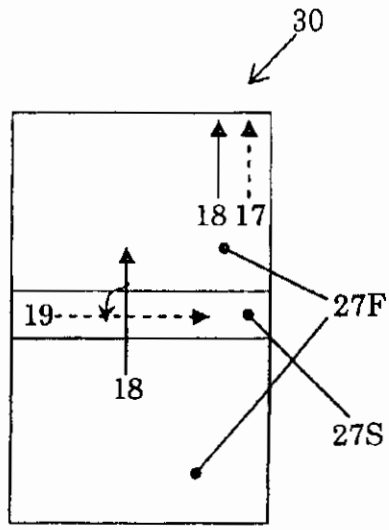
30
18
17
19
18
27F
27S

FIG.22

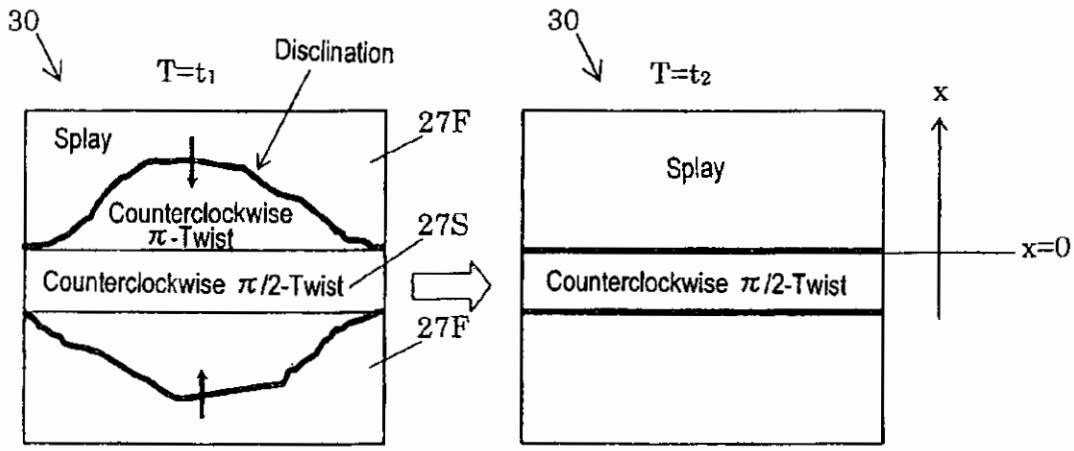
30
T=t1
Disclination
Splay
Counterclockwise π-Twist
Counterclockwise π/2-Twist
27F
27S
27F
30
T=t2
Splay
Counterclockwise π/2-Twist
x
x=0

FIG.23

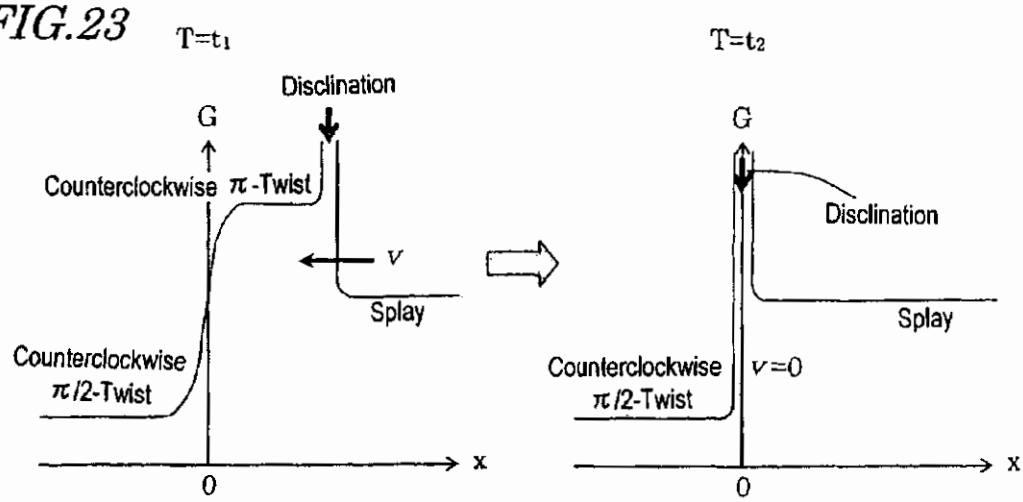
T=t1
T=t2
Disclination
G
Counterclockwise π-Twist
v
Splay
Counterclockwise π/2-Twist
x
0
G
Disclination
Splay
Counterclockwise π/2-Twist
v=0
x
0

FIG.24

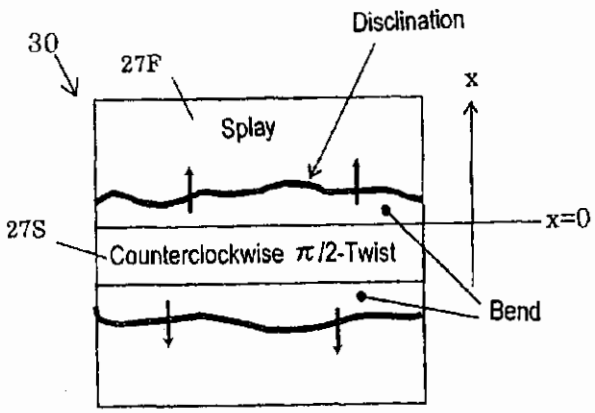
30
27F
Disclination
x
Splay
x=0
27S
Counterclockwise π/2-Twist
Bend

FIG.25

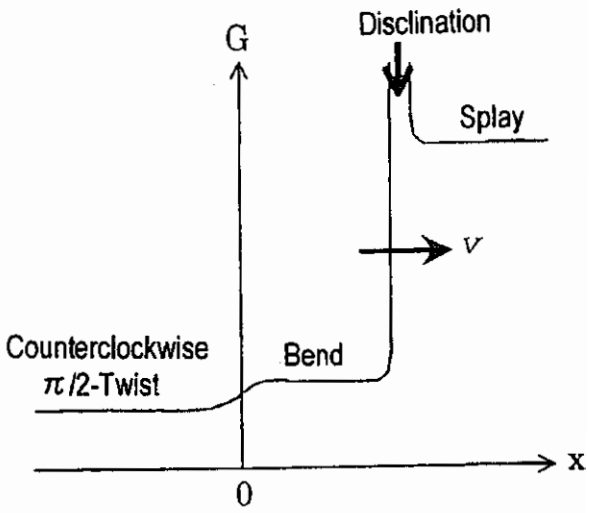
G
Disclination
Splay
v
Counterclockwise
π/2-Twist
Bend
x
0

FIG.26

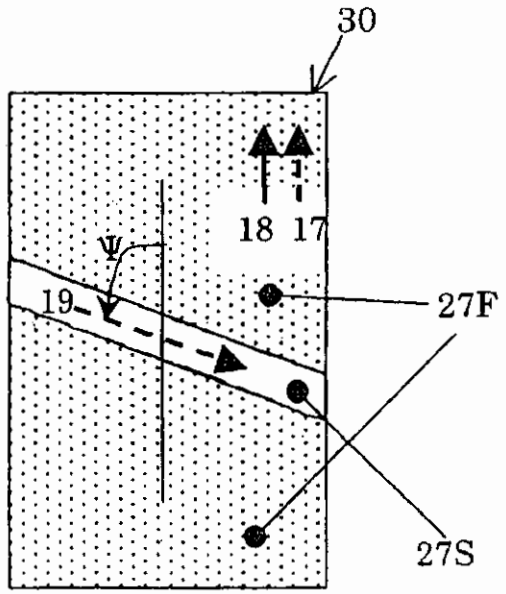
30
18
17
Ψ
19
27F
27S

FIG.27

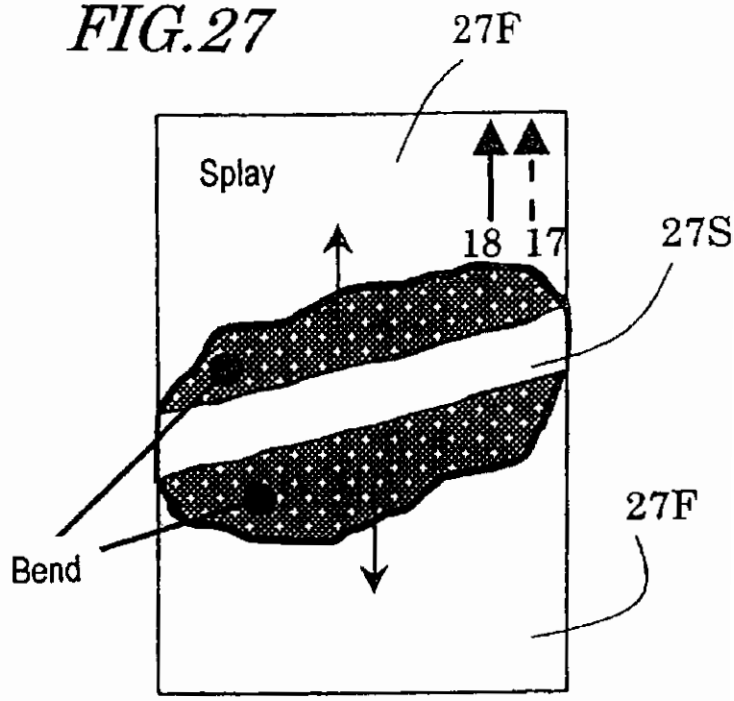

FIG.28

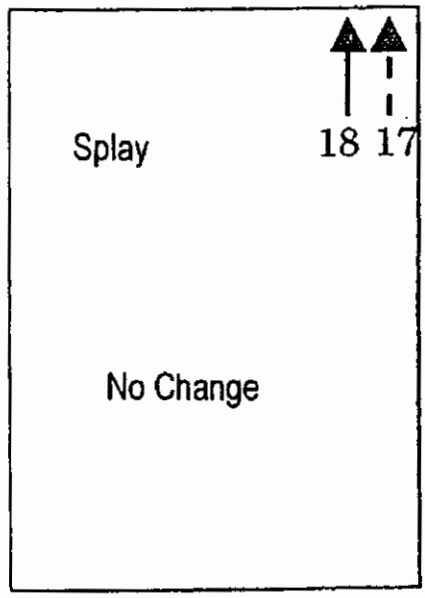

FIG.29

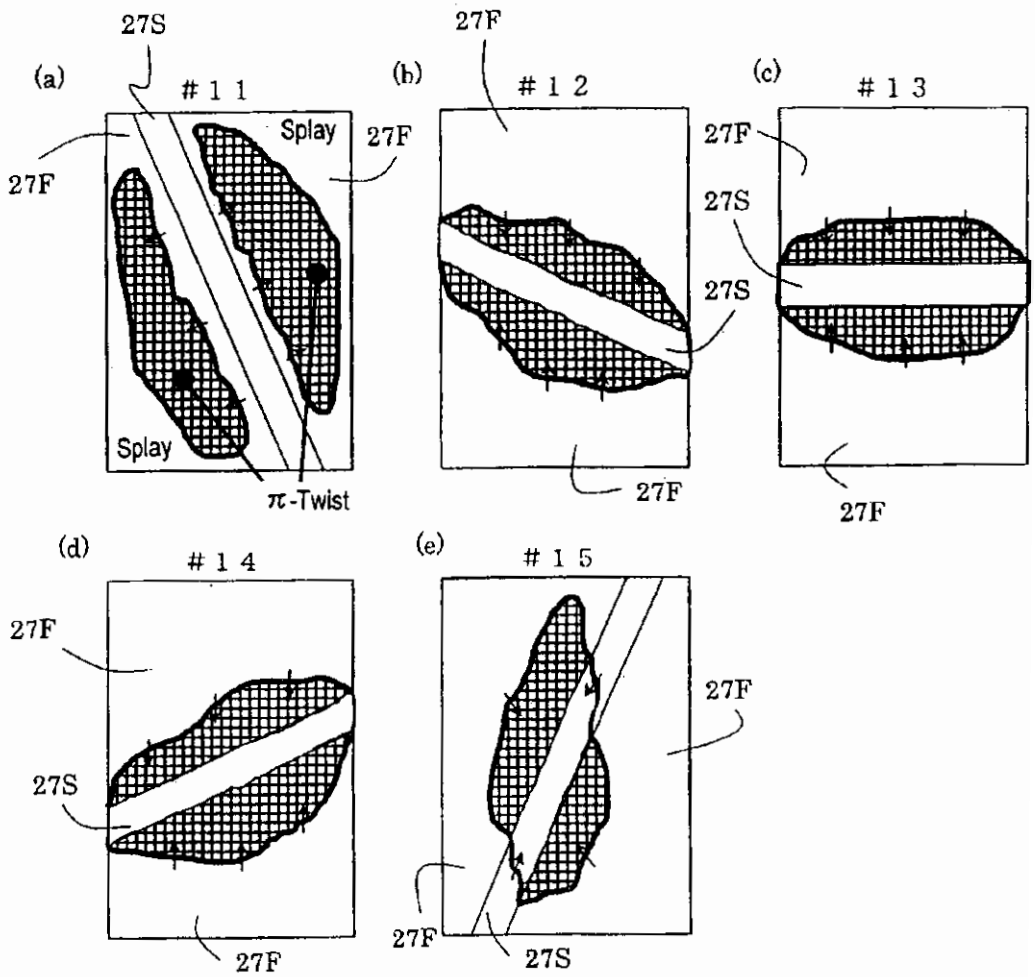
(a)
#11
27S
27F
Splay
27F
Splay
π-Twist
(b)
#12
27F
27F
(c)
#13
27F
27S
27S
27F
(d)
#14
27F
27S
27F
(e)
#15
27F
27F
27S

FIG.30

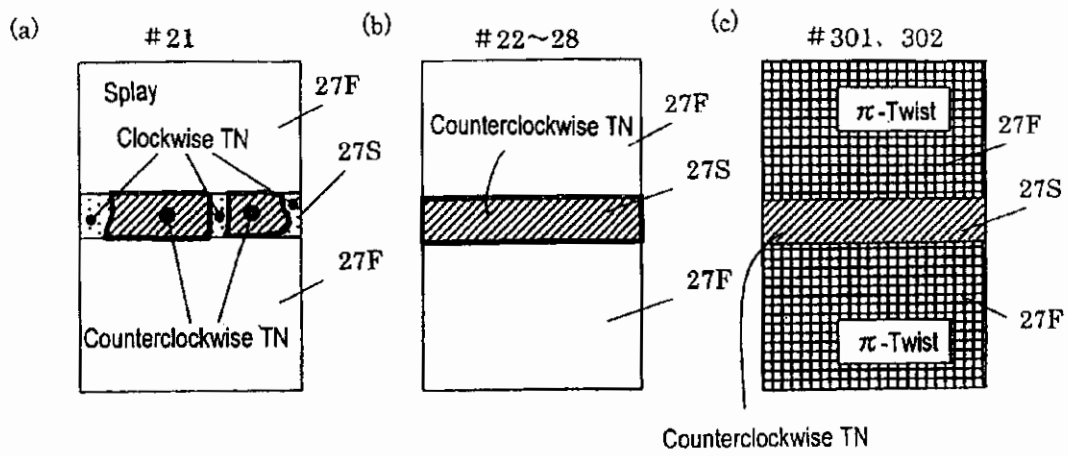
(a)
#21
Splay
Clockwise TN
Counterclockwise TN
27F
27S
27F
(b)
#22~28
Counterclockwise TN
27F
27S
27F
(c)
#301、302
π-Twist
π-Twist
27F
27S
27F
Counterclockwise TN

FIG.31

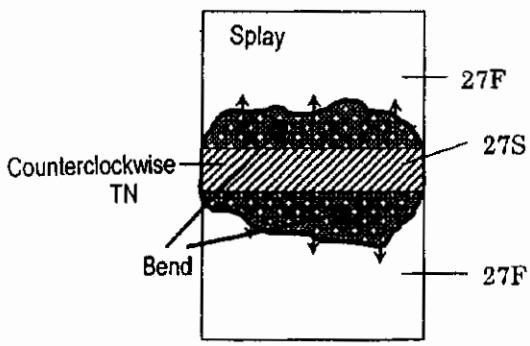
Splay
27F
27S
Counterclockwise TN
Bend
27F

FIG.32

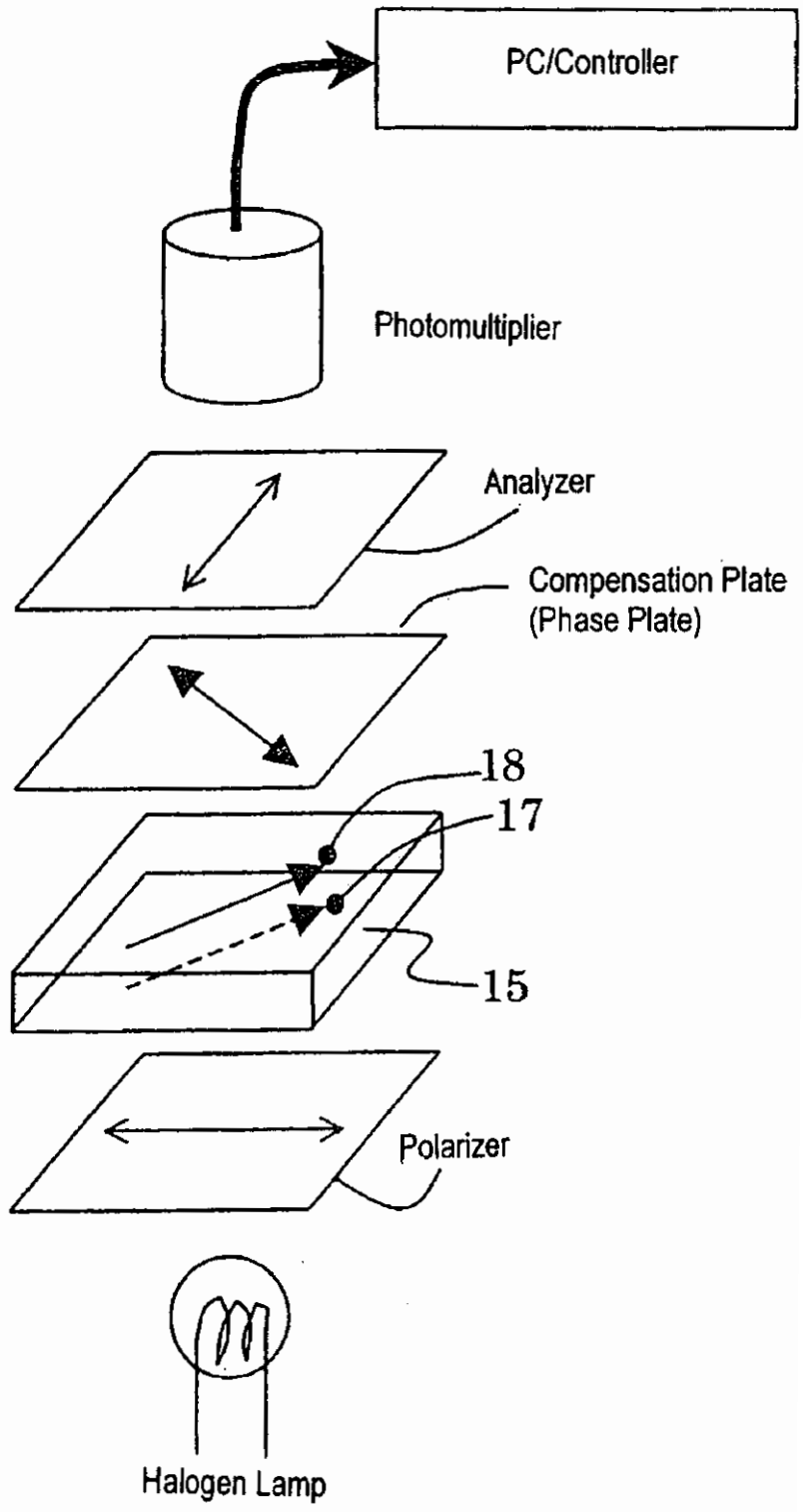
PC/Controller
Photomultiplier
Analyzer
Compensation Plate
(Phase Plate)
18
17
15
Polarizer
Halogen Lamp

FIG.33

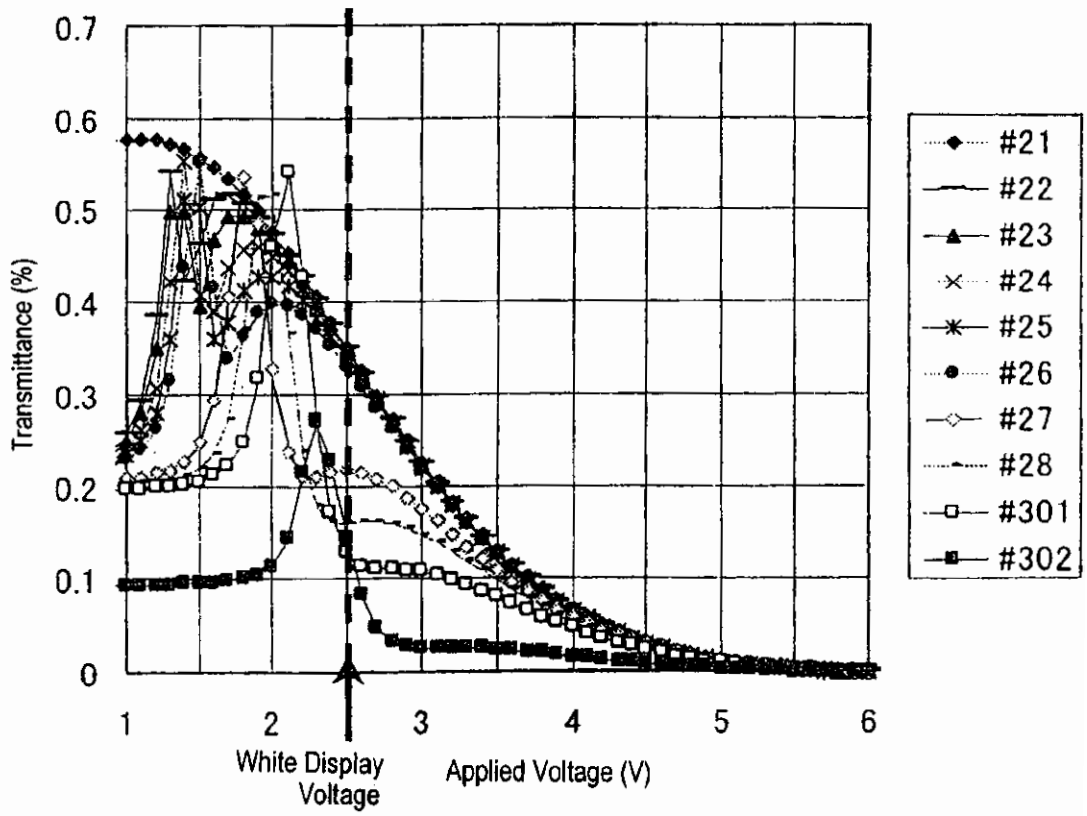
0.7
0.6
0.5
0.4
0.3
0.2
0.1
0
Transmittance (%)
1
2
3
4
5
6
White Display Voltage
Applied Voltage (V)
#21
#22
#23
#24
#25
#26
#27
#28
#301
#302

FIG.34

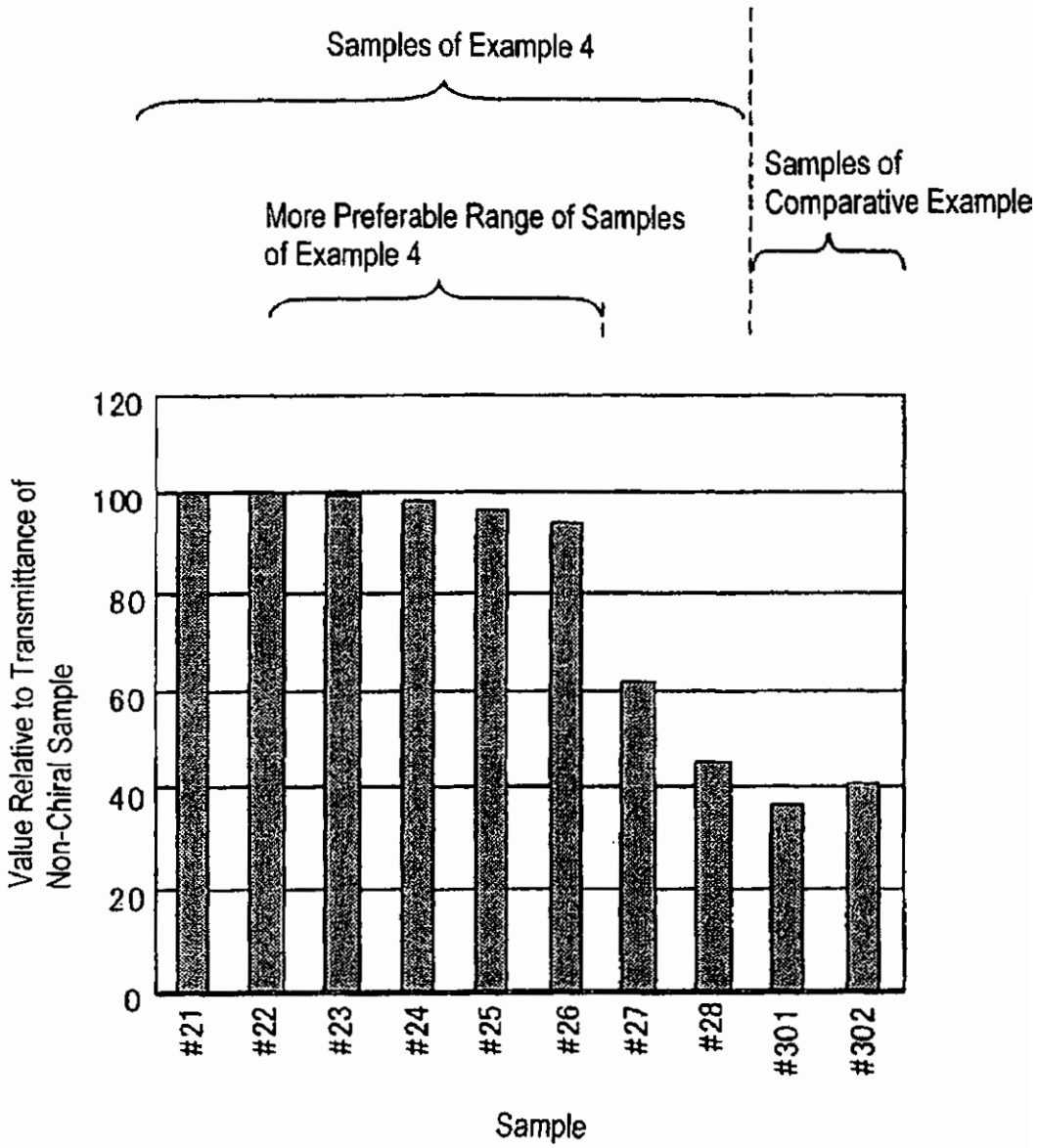
Samples of Example 4
Samples of Comparative Example
More Preferable Range of Samples of Example 4
Value Relative to Transmittance of Non-Chiral Sample
120
100
80
60
40
20
0
#21
#22
#23
#24
#25
#26
#27
#28
#301
#302
Sample

FIG.35

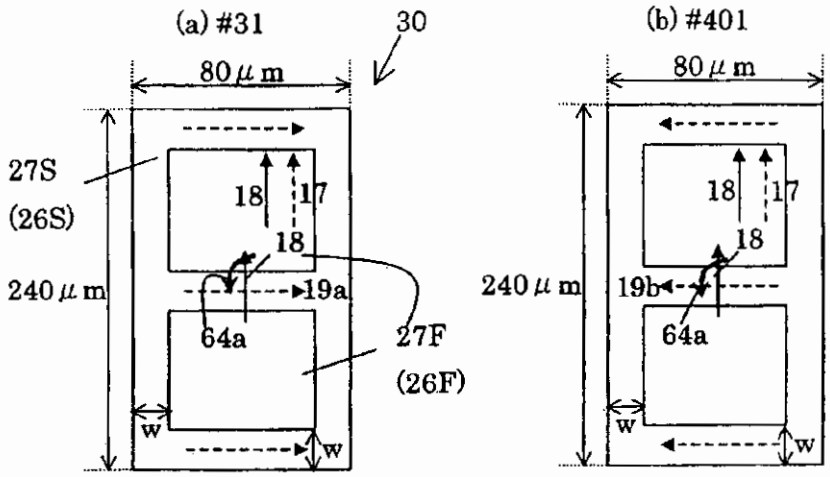
(a) #31
30
80 μ m
27S
(26S)
18
17
18
240 μ m
19a
64a
27F
(26F)
w
w
(b) #401
80 μ m
18
17
18
240 μ m
19b
64a
w
w

FIG.36

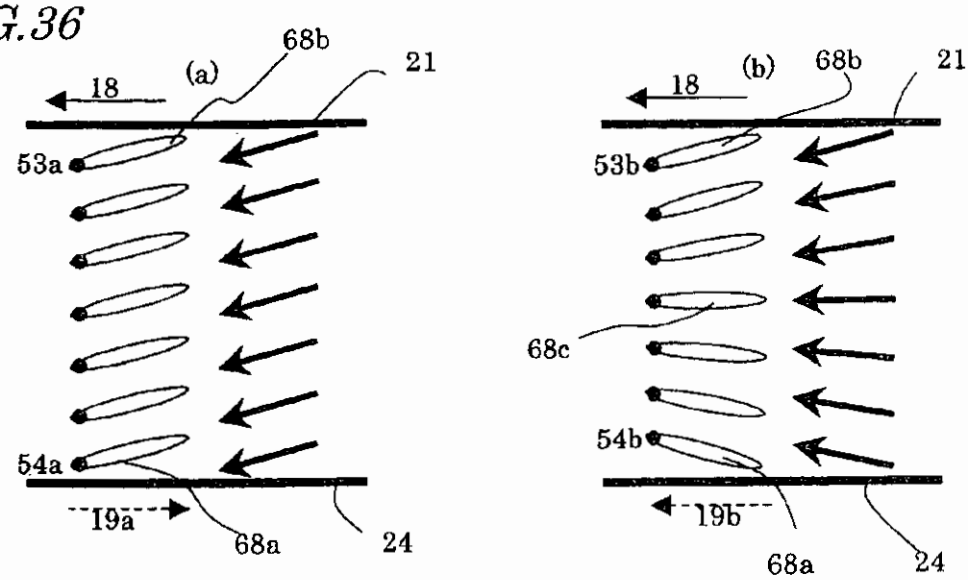
(a)
68b
21
18
53a
54a
19a
68a
24
(b)
68b
21
18
53b
68c
54b
19b
68a
24

FIG.37

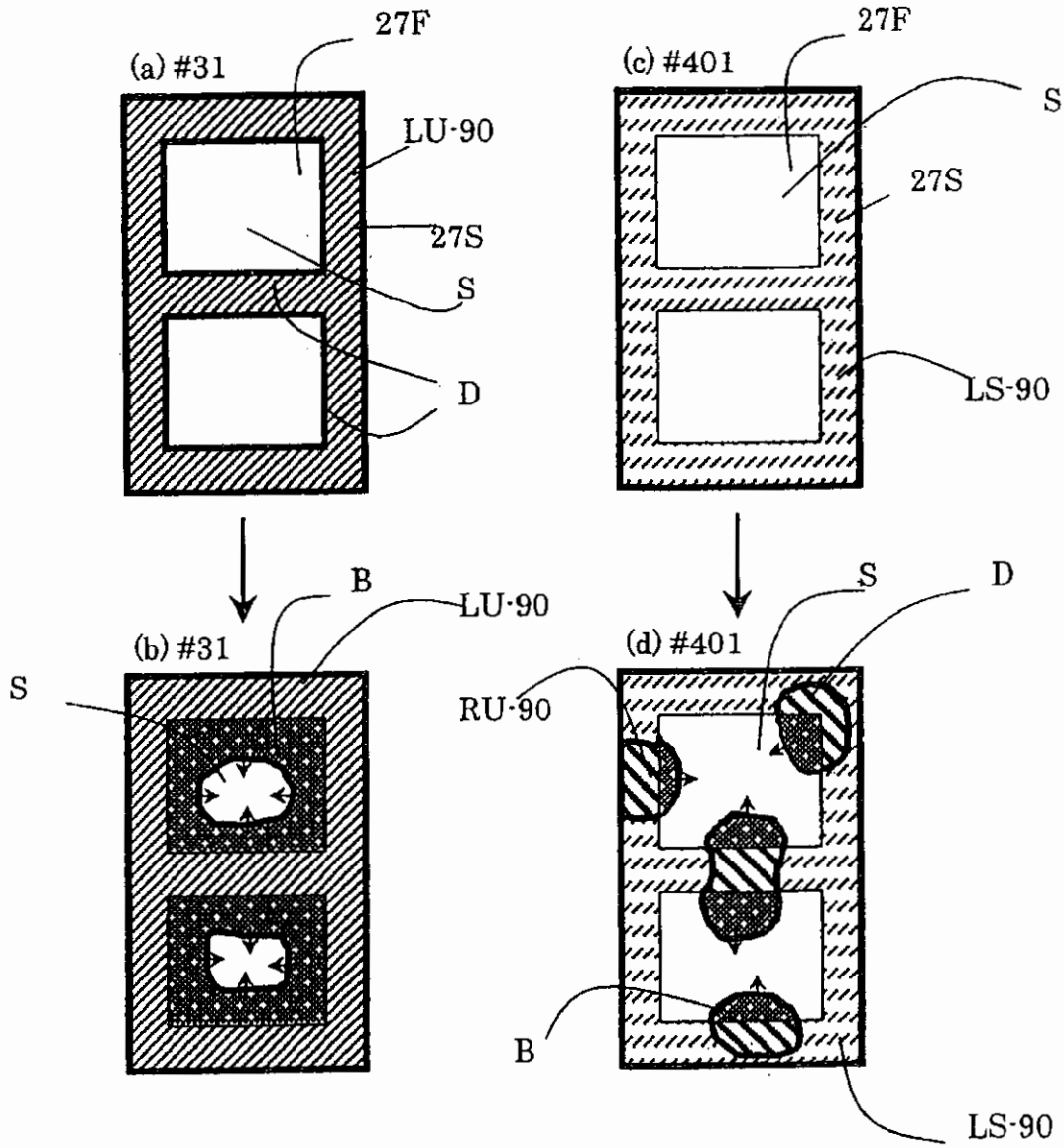
(a) #31
27F
LU-90
27S
S
D
(b) #31
B
LU-90
S
(c) #401
27F
S
27S
LS-90
(d) #401
S
D
RU-90
B
LS-90

FIG.38

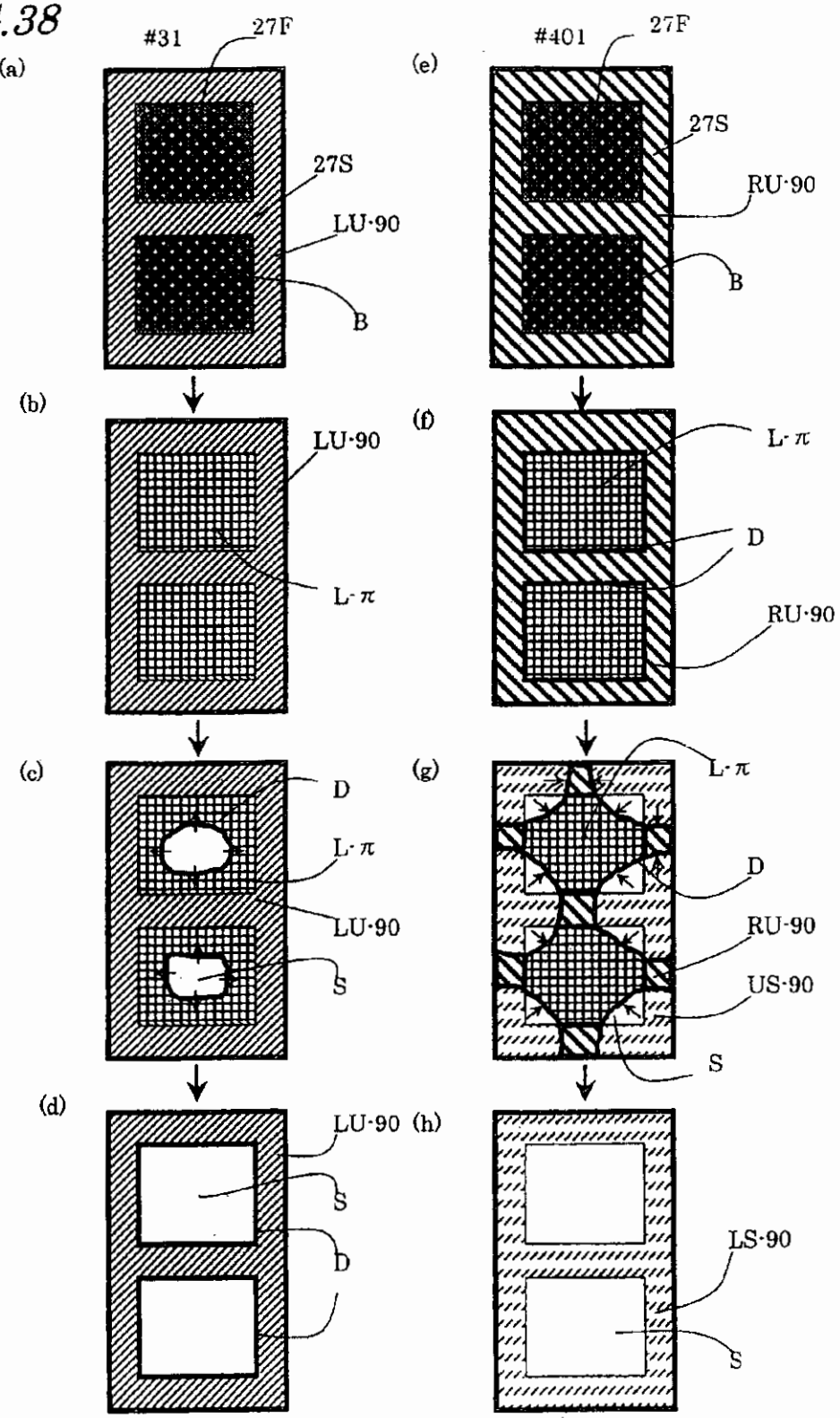
(a)
#31
27F
27S
LU·90
B
(b)
LU·90
L·π
(c)
D
L·π
LU·90
S
(d)
LU·90
S
D
(e)
#401
27F
27S
RU·90
B
(f)
L·π
D
RU·90
(g)
L·π
D
RU·90
US·90
S
(h)
LS·90
S