[All original figures deleted and replaced by line drawings in black/white as shown herein.]

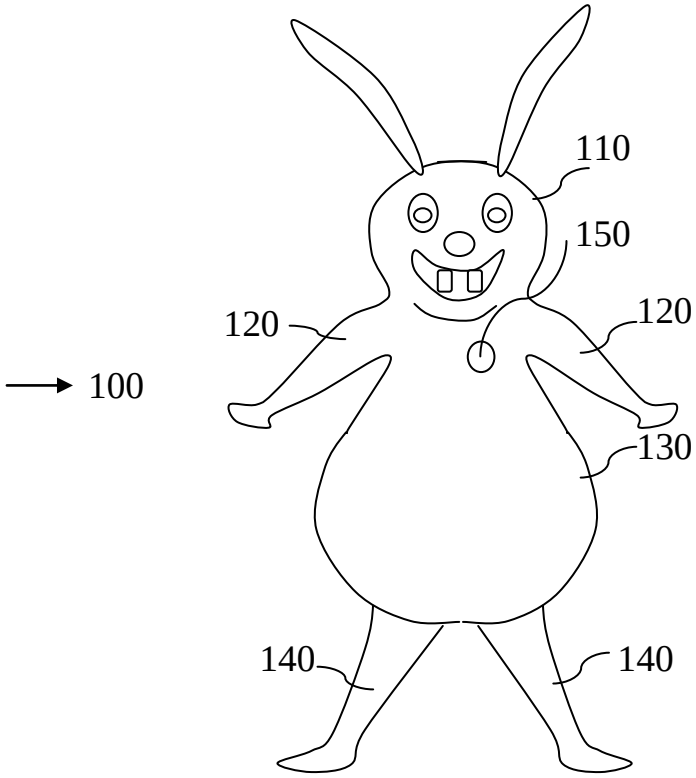

FIG. 1A

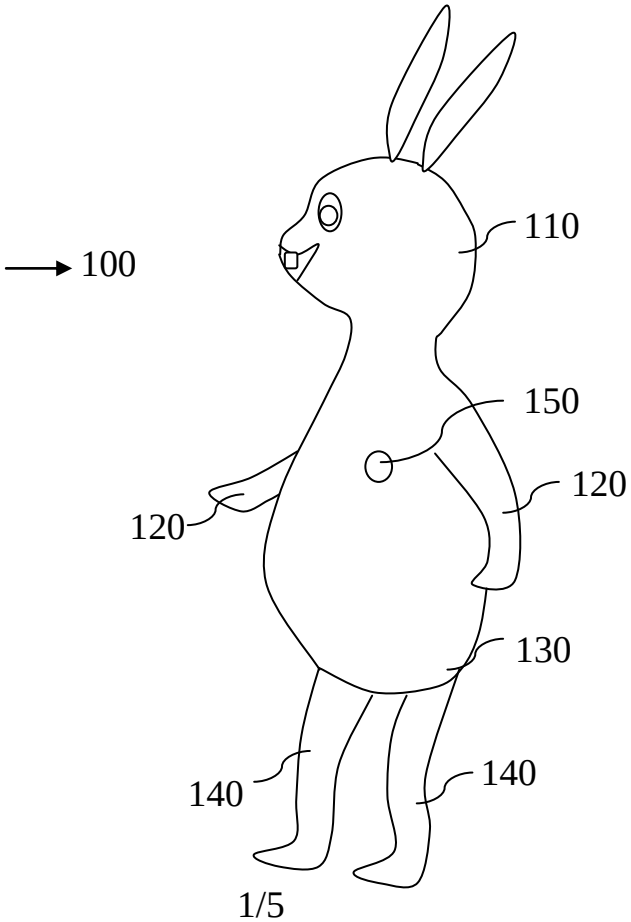

FIG. 1B

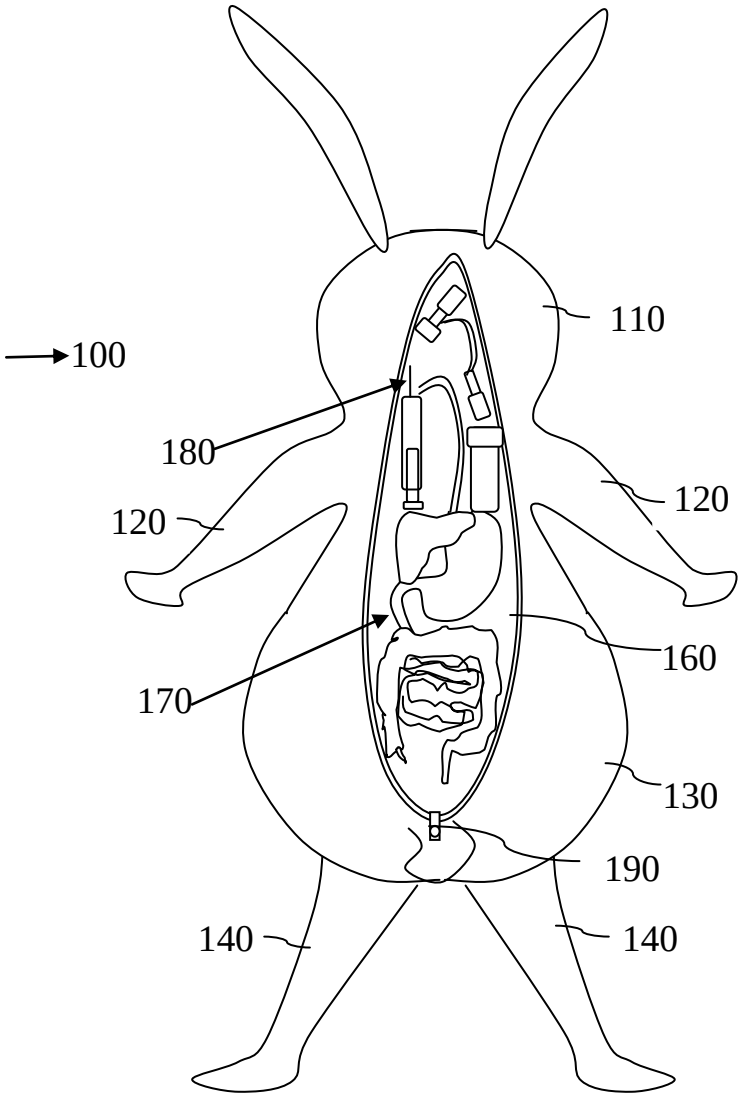

FIG. 1C

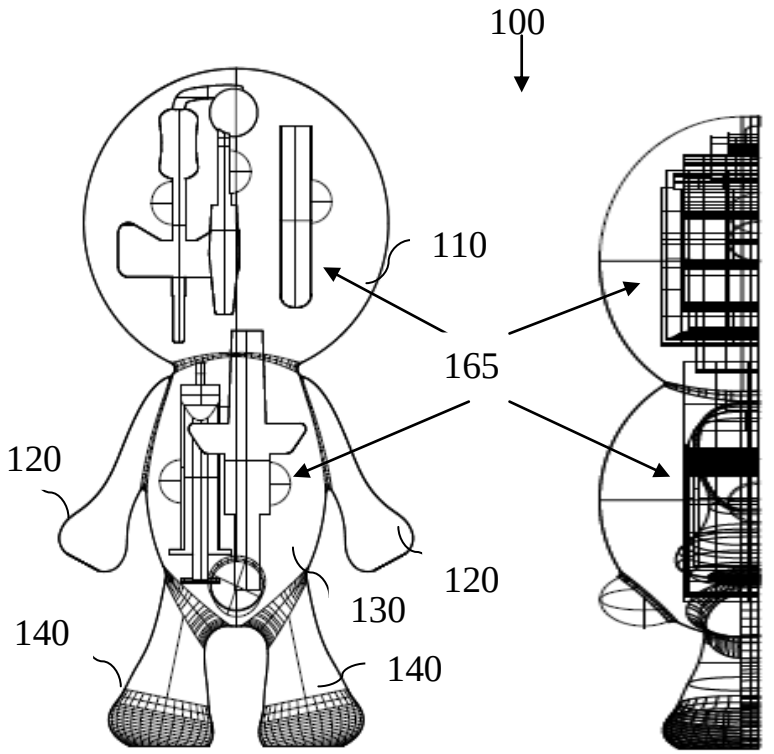

FIG.1D

FIG.1E

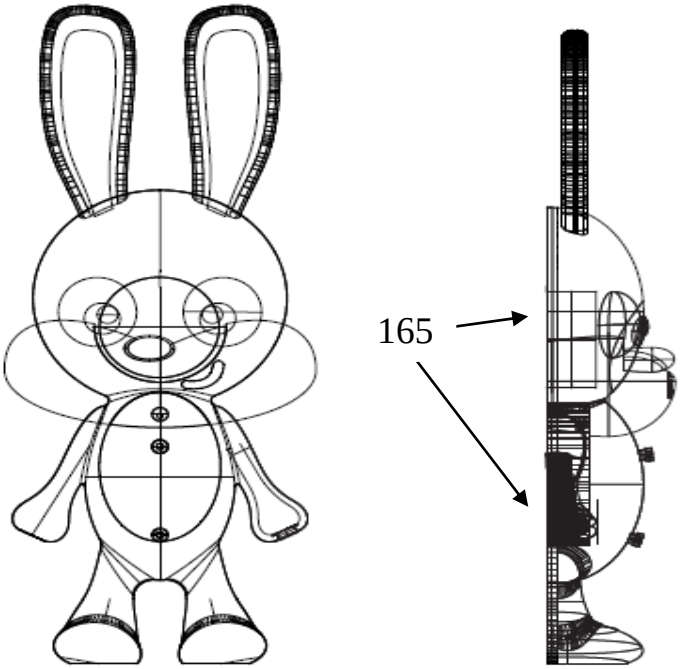

FIG.1F

FIG.1G

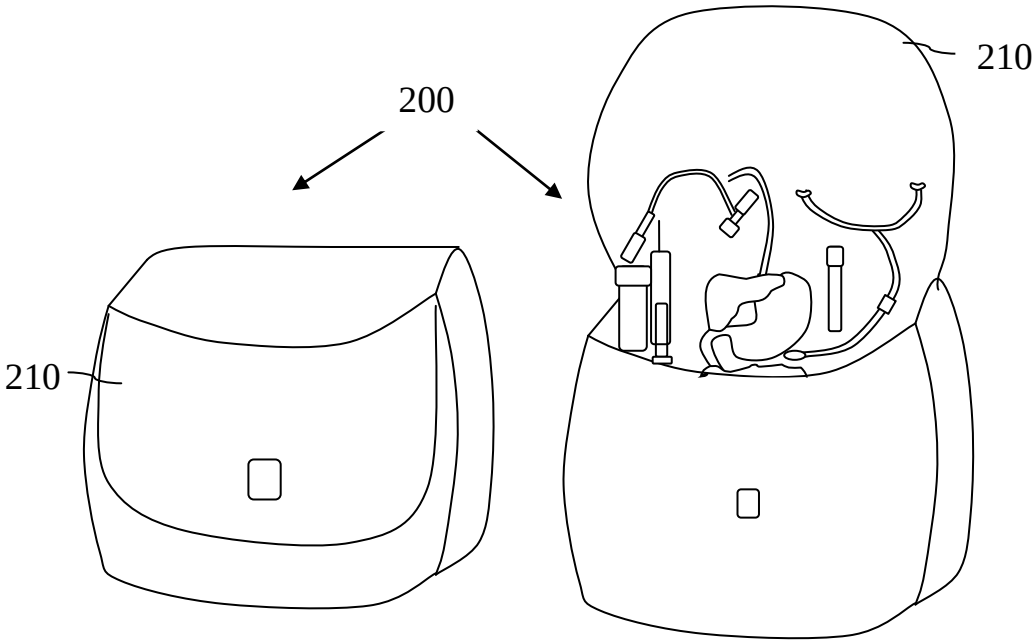

FIG. 2A

FIG. 2B

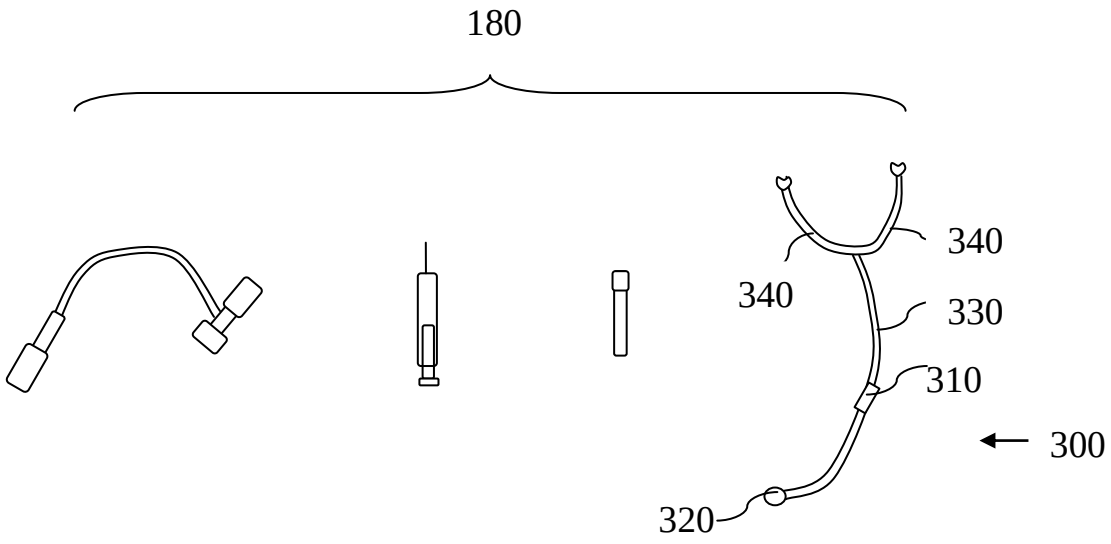

FIG. 3

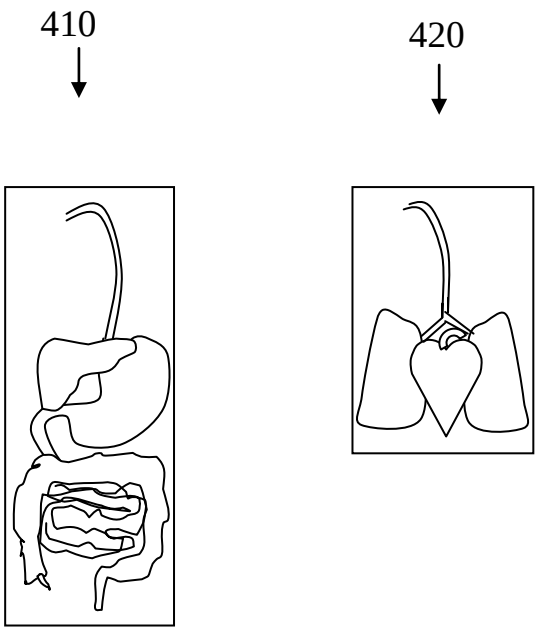

FIG. 4