1

9609095-6

IPOS's copy

PROTECTIVE EQUIPMENT FOR THE HEAD COMPRISING A BREATHING MASK AND AN OPTICAL SCREEN

The present invention relates to protective equipment for the head of the type comprising a breathing mask provided with a harness and connectable to a source of breathing gas enabling the mask to be put under positive pressure relative to the atmosphere, and a screen for protecting the eyes against smoke, the screen being provided with a peripheral sealing gasket for pressing against the face and the mask, the screen and the mask being separate and distinct from each other.

Such protective equipment for the head of the type defined above is already known. The breathing mask, provided with a regulator, protects the wearer of the mask against lack of oxygen and against smoke or toxic gases penetrating into the respiratory tract. The harness serves to press the mask against the face with sufficient pressure to ensure sealing. When it is in place, the protective screen protects the eyes against smoke and irritating gases.

A major, but non-exclusive application of the invention lies in aviation. The mask is then designed in particular to provide protection against lack of oxygen in the event of pressurization being lost at high altitude, thus requiring the mask to be provided with a demand regulator for feeding gas at positive pressure as a function of altitude, and requiring the harness to be capable of pressing the mask against the face with sufficient force to prevent leaks appearing that would otherwise reduce the positive pressure inside the mask. To satisfy these conditions, the harness may be constituted by a strap that exerts a force which is adjustable either automatically (e.g. by modifying an internal pressure when the straps are extensible by inflation), or manually (e.g. when the harness includes not only pneumatically extensible straps, but also cloth

REPLACED SHEETS SG	
☑ Description	: paged 1 to paged 1
☑ Claim(s)	: paged 9 to paged 10
☑ Drawing(s)	: paged 1/5 to paged 3/9
☑ Abstract	: paged 11 to paged —
DATE OF RECEIPT	

This Sheet Has Been Replaced



straps that are loose while the mask is in the storage position and that can be tightened manually).

Mask-and-screen assemblies have already been proposed that comprise a single block (US design patent 304 384), thereby presenting a solution that is satisfactory when the mask is designed to be installed only an emergency. That solution is often unacceptable in other cases, e.g. equipment for pilots and copilots of transport aircraft which are required by regulations to carry equipment for providing protection against lack of oxygen on a permanent basis under certain flying conditions, in particular at very high altitude or when only one pilot is present in the cockpit. Under such circumstances, the screen constitutes a hindrance and also gives rise to a feeling of claustrophobia.

The present invention seeks in particular to provide protective equipment for the head that satisfies practical requirements better than previously known equipment, in particular with respect to making it possible or at least more convenient to use the mask on its own and to install the screen quickly in the event of need, or else to use the regulator mask with the screen mounted in place and to enable the screen portion to be removed if the user so desires. To this end, the invention provides, in particular, equipment of the type defined above, characterized in that it includes means for locking the screen on the mask, which means are manually releasable, and bear against the mask so as to press the gasket against the face.

To prevent smoke or toxic gas or irritating gas being kept in contact with the eyes, and to prevent condensation forming on the screen, the screen is advantageously provided with means that automatically open an inlet to allow breathing gas inside the mask to pass into the screen when the screen has been put into place and locked in position. The positive pressure relative to the atmosphere (which is always necessary

This Sheet Has Been Replaced



inside the mask, even at normal atmospheric pressure, in order to ensure that the same smoke or gases cannot gain access to the respiratory tract) then causes breathing gas to pass into the screen, thereby sweeping out any smoke or gas that may have been captured therein.

The harness may be a harness for fitting rapidly, and suitable for fitting to any size of head or helmet (such as those described in document EP-A-028839 and French patent application FR 9211342, for example); it may be alternatively be constituted by straps provided with buckles for tightening purposes, and that is particularly appropriate when there is no need for the harness to be put on rapidly.

The invention will be better understood on reading the following description of particular embodiments given as non-limiting examples. The description refers to the accompanying drawings, in which:

Figure 1 shows the outside appearance of protective equipment constituting an embodiment of the invention, using a mask that is provided with a demand regulator and with a harness having inflatable straps;

Figure 2 is a fragmentary section through a portion of the mask and the screen, showing the means designed to provide communication between the inside of the mask and the inside of the screen when the screen is put into place;

Figure 3 is a section view showing one possible structure of the means for locking the screen on the mask;

Figure 4 is a detail perspective view showing the portion of the Figure 3 locking means that is carried by the mask;

Figures 5 and 6 are similar to Figures 3 and 4 showing another embodiment of the locking means;

Figures 7 and 8, likewise similar to Figures 3 and 4, show yet another variant; and

This Sheet Has Been Replaced



Figure 9 is a diagrammatic section view showing means that enable the pressure with which the mask is applied against the face to be increased when screen locking is being put into place, so as to compensate for the additional lifting force due to the behavior of the face when the mask is used at positive relative pressure.

The protective equipment shown diagrammatically in Figures 1 and 2 comprises a mask and a harness of generally known structure. For example, a description thereof may be found in document EP-A-0 288 391. The mask comprises a facepiece 10 that is fixed to a demand regulator 12 associated with a rigid connection block 14. The block 14 is secured to a shell 16 covering the front of the facepiece. The connection block 14 is designed to be connected to a source of breathing gas under pressure (generally oxygen under pressure) via a flexible hose 15. The harness shown by way of example has two straps 18 each constituted by an inner tube of resilient material contained within an inextensible sheet that puts a limit on elongation of the tube, said straps being connected to the block 14. The sheaths are of a length that enables the harness to be passed over heads of all sizes when both tubes are inflated by pressing on handles 20. The resilience of the tubes is sufficient to ensure suitable clamping on the head to enable the breathing equipment to be used when it is fed with gas under pressure.

The screen 22 includes a transparent window 24 of optical quality whose edges are held captive in a sealing gasket 26 and which is extended by a block 28 for fixing on the shell of the mask.

The top portion of the sealing gasket 26 that is designed to bear against the forehead and the temples may be of conventional structure. The bottom portion of the gasket which needs to bear against zones of the face and of the shell that include concave portions, is advantageously constituted in the form of a strip of foam material so as to achieve a large area of contact. In

This Sheet Has Been Replaced

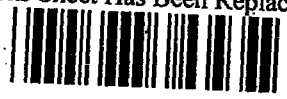

use, this bottom portion is received beneath the top strap 18. To make it easier to put the mask into place, the top strap can be moved away from the face in its zone close to its connection with the shell, e.g. by guiding it for a few centimeters over a length of rigid tube. In a variant embodiment, the bottom portion of the sealing gasket is wedge-shaped so as to lift the top strap when the screen is put into place on a mask that is already being worn by the user.

The screen 22 and the mask are advantageously designed in such a manner as to organize a flow of breathing gas inside the screen when the screen is in place. In particular, it is possible to admit breathing gas automatically or otherwise from the inside of the mask into the inside of the screen via means that are closed so long as the screen is not in place. The breathing gas may escape by leaking between the gasket and the skin. Slots may also be provided in the top portion of the gasket so as to guide the sweeping air.

By way of example, Figure 2 shows breathing gas admission means comprising a valve suitable for placing in part on the top edge of the shell of the mask and in part on the gasket 10. This valve comprises a seat 30 pierced by holes and placed in the facepiece, and a closure lever 32 rotating on a pin 34 belonging to the shell. Sealing is provided by the gasket 31. A spring 36 urges the lever 32 towards the seat 30. The fixing block 28 belonging to the screen includes a tab 38 which, when the screen is in place, bears against one of the levers 32 in such a manner as to raise the other end away from the seat 30, thereby opening communication with the inside of the screen. Other structures would naturally be possible.

The fixing block 28 is designed to allow rapid installation on the shell 16 of the mask. The fixing means may be of very different structures, and only a few embodiments are given by way of example.

This Sheet Has Been Replaced

In the embodiment shown in Figures 3 and 4, the fixing block of the screen includes a slide 40 having balls 42 urged towards projecting positions by respective springs. The slide is designed to engage in a slideway 44 secured to the shell 16. Housings 46 are provided in the slideway to receive the balls and to lock the slide 40 automatically. Two pushers 48 are placed on either side of the slideway for pushing in the balls and for allowing the screen to be unlocked manually when it is no longer useful and can be removed. In a variant, the slideway is fixed to the screen and the slide to the shell.

In the variant embodiment shown in Figures 5 and 6, a soft iron bar 50 is incorporated in the fixing block 28. This bar is designed to engage in a slideway 52 that is secured to the shell 16 and to be retained therein by an electromagnetic field created by coils 54 embodied in the slideway, whenever said coils are powered. The coil power supply is provided with means such as a tab 56 placed so as to be actuated by the bar 50 at the end of its insertion stroke. Unlocking can be performed by acting manually on a switch, using a pushbutton 58 similar to the pushbuttons 48 of Figure 4.

It is also possible to provide retention by means of permanent magnets having an attractive force that is selected so as to hold the screen effectively while still leaving it possible to exert manual force to remove the mask against the action of the permanent magnets.

In the embodiment shown in Figures 7 and 8, the mask is locked manually after being put into place. The fixing block secured to the screen again includes a slide 60 which is designed to engage in a slideway 62 secured to the shell 16. Two manually-controlled latches 64 enable the slide to be locked in place once fully engaged, by being moved into engagement therewith under drive from the fingers of the user. Unlocking can then be achieved by using a button 66 that is held captive in

This Sheet Has Been Replaced



the slide 60 and that is pushed into a projecting position as shown in Figure 7 when the latches 64 are themselves pushed home. The user unlocks the screen by pressing on the button 66 which acts on sloping surfaces of the latches to move them apart from each other and to disengage them from the slide. In a variant embodiment, the latches 64 are urged towards each other by springs.

When the regulator mask (facepiece) is suitable for being fed at positive relative pressure, it is advantageous to provide a fixing block that increases the pressure with which the screen is pressed against the face. Figure 9 shows means that can be provided for achieving this result.

In the example shown in Figure 9, the fixing block includes a guide 68 designed to engage in a base 70 which may be integral with the slideway belonging to the mask fixing means. The guide is hinged behind a lever 72. A spring 74 is interposed between the other end of the lever and the guide 68.

In general, the screen does not have its own harness and the fixing block 28 is designed to press the sealing gasket 26 against the face with sufficient force in spite of the fact that the screen is cantilevered out relative to the mask. Nevertheless, it is also possible to provide a cloth strap on the harness. This strap is then relaxed or open except during periods of use so that it does not impede putting the screen into place.

In an aircraft, the equipment is generally stored in a box within reach of the pilot. When not in use, the mask is stored together with the screen locked thereon, so that in an emergency the pilot can place the mask-and-screen assembly on the face, can have breathing oxygen available in the locations specified by the regulations in force, and can be protected against smoke. If circumstances then do not require a screen to be worn, the pilot can take it off. To prevent the screen being forgotten, the storage box is advantageously designed in

This Sheet Has Been Replaced



such a manner that the mask cannot be put back into place therein without the screen being fixed to the mask.

This Sheet Has Been Replaced

CLAIMS

1/ Protective equipment for the head comprising a breathing mask fitted with a harness and connectable to a source of breathing gas, and including a screen (22) for protecting the eyes against smoke, the screen being provided with a peripheral sealing gasket (26) that presses against the face and against the mask, which mask and screen are separate parts;

the equipment being characterized in that it includes means for locking the screen on the mask, which means are manually releasable, and bear against the mask so as to press the gasket against the face.

2/ Equipment according to claim 1, characterized in that said screen (22) includes means (38) providing communication between the inside of the mask and the inside of the screen on their being locked together.

3/ Equipment according to claim 2, characterized in that said means comprise at least one valve seat (30) placed on the mask in a location such as to open out inside the screen, and means (38) for forced opening of the valve when the screen is put into place.

4/ Equipment according to claim 1, characterized in that the screen and the mask carry means (68, 74) for increasing the mechanical pressure with which the gasket is applied to the face while the screen is locked in place.

5/ Equipment according to claim 4, characterized in that the screen does not have its own harness.

6/ Equipment according to claim 1, characterized in that the locking means comprise a slide (40, 60) fixed to the screen or to a rigid shell of the mask, and a slideway (44, 62) fixed to the shell.

This Sheet Has Been Replaced

10



7/ Equipment according to claim 6, characterized in that the locking means further include balls (42) placed in the slide, urged towards a laterally projecting position in which they engage in housings in the slideway (44), and pushers (48) carried by the slideway and enabling the balls to be expelled from the housings.

8/ Equipment according to claim 6, characterized in that the locking means include latches (64) carried by the slideway (62) and manually displaceable into an engagement position within the slide (60).

9/ Equipment according to claim 6, characterized in that the locking means include magnetic or electromagnetic means (50, 54) carried by the screen and the mask.

10/ Equipment according to claim 1, characterized in that said harness is designed to leave insertion clearance for the bottom portion of the gasket (26) between the face and the portion of the harness close to its connection with the mask.

This Sheet Has Been Replaced

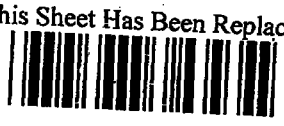

A B S T R A C T

The protective equipment for the head comprises a breathing mask provided with a harness and connectable to a source of breathing gas, together with a screen (22) for protecting the eyes against smoke, the screen being provided with a peripheral sealing gasket (26) that presses against the face and against the mask. The mask and the screen are distinct and separable. Manually releasable locking means lock the screen to the mask and bear against the mask so as to press the gasket against the face. The equipment is particularly intended for use by aircraft flight crew members.

This Sheet Has Been Replaced

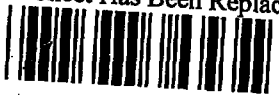

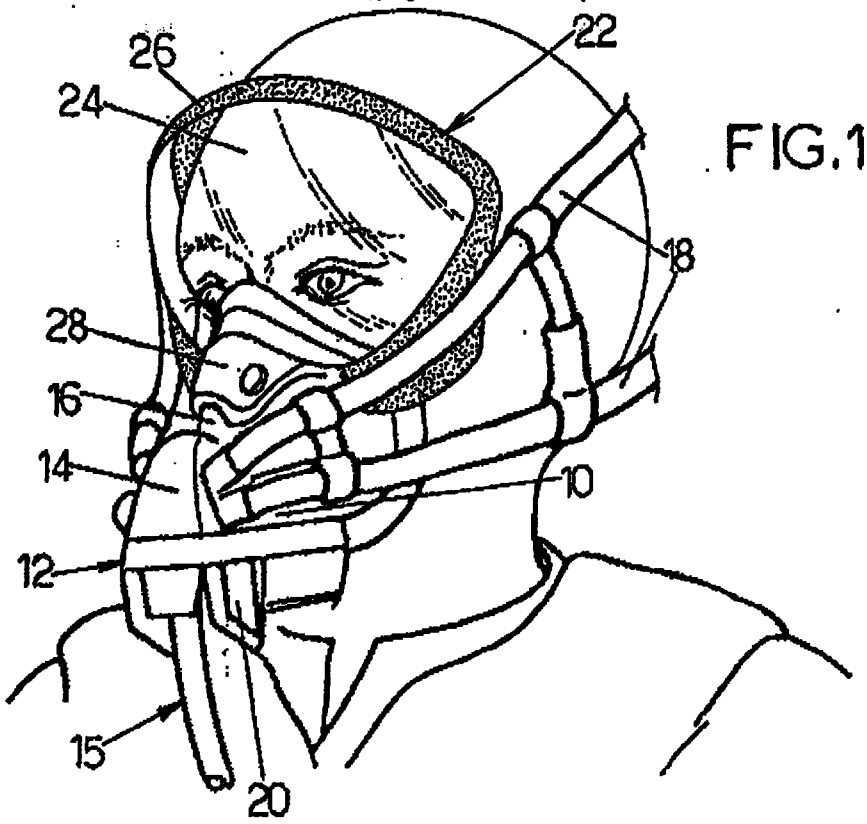

FIG.1.

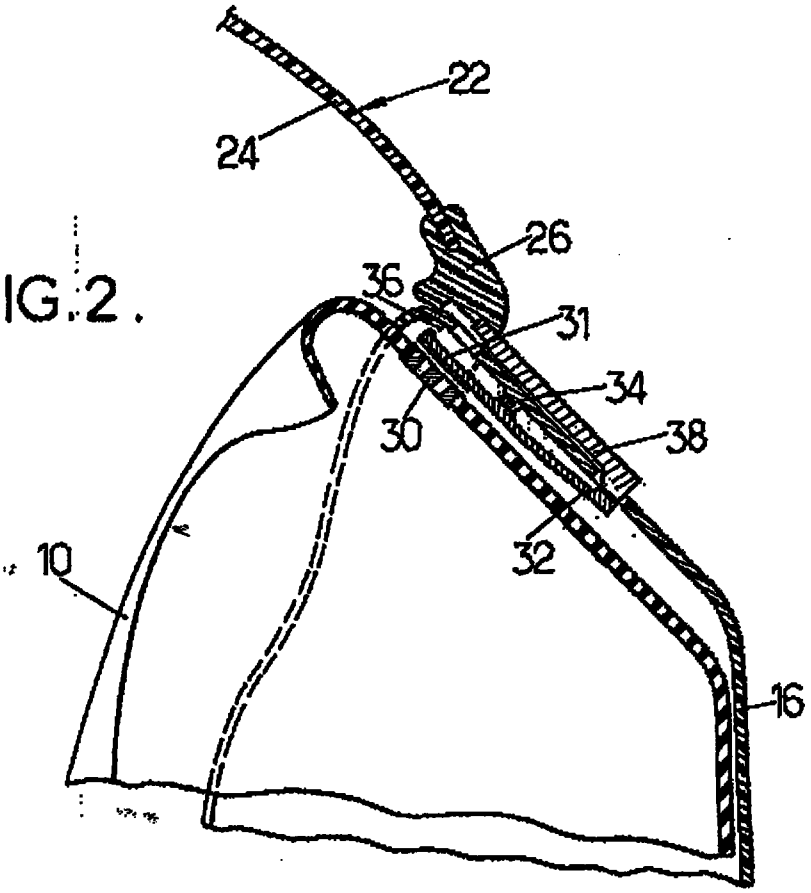

FIG.2.

This Sheet Has Been Replaced

FIG.3.

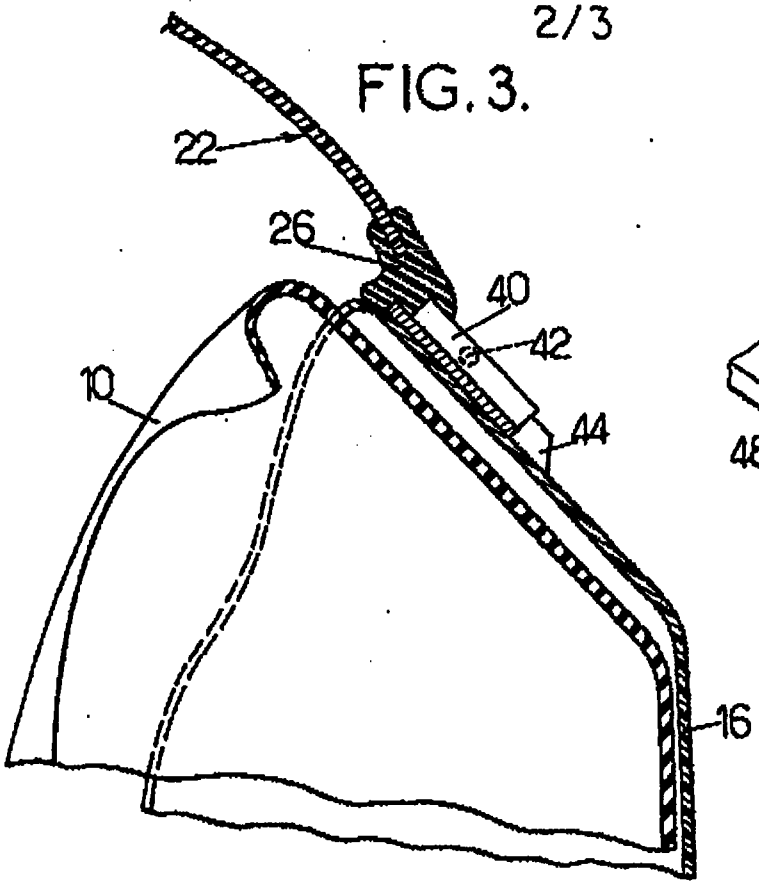

FIG.4.

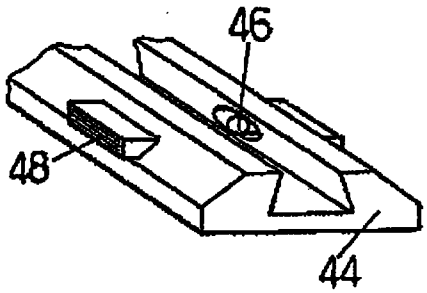

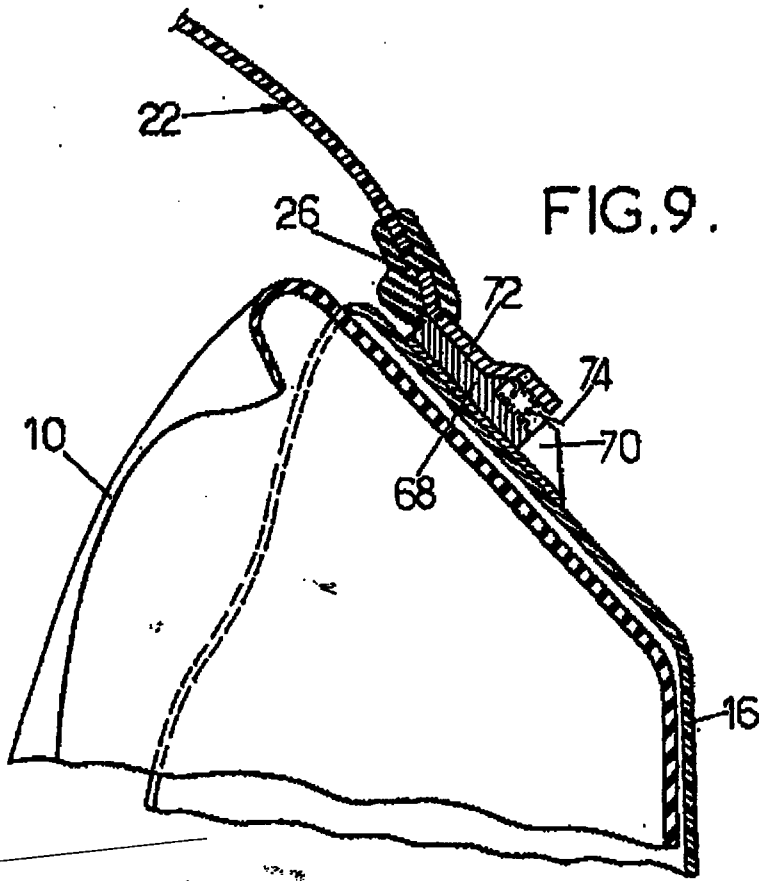

FIG.9.

This Sheet Has Been Replaced

FIG.5.

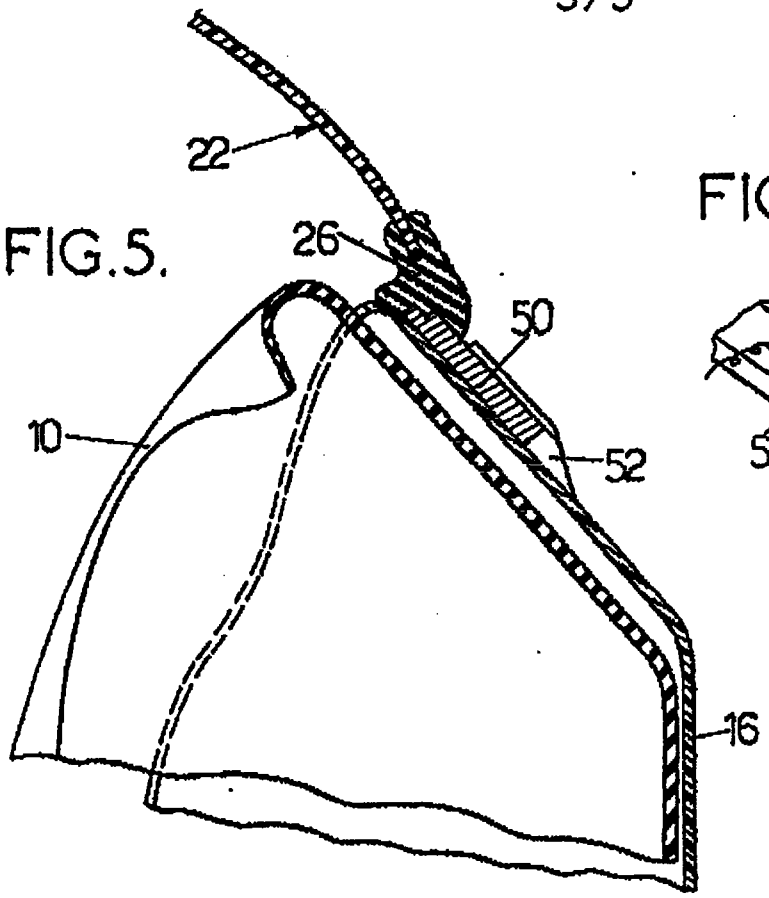

FIG.6.

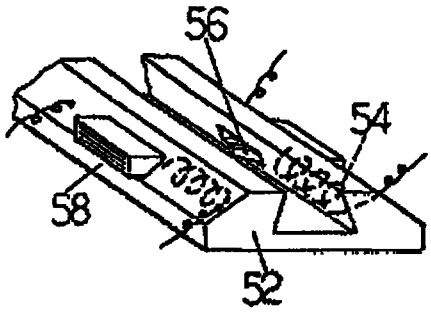

FIG.7.

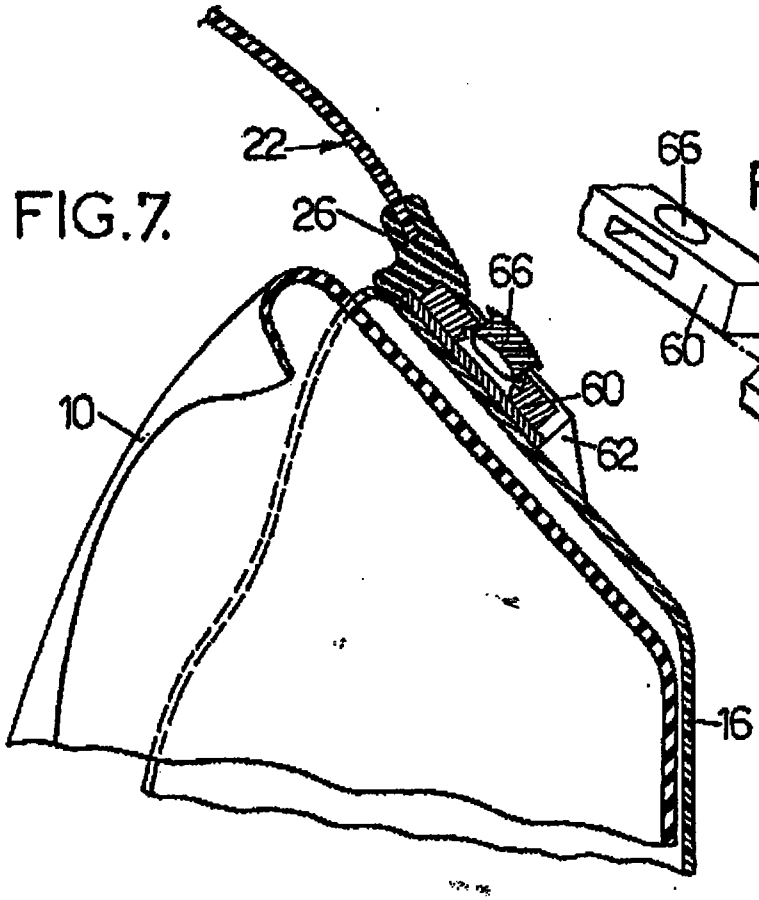

FIG.8

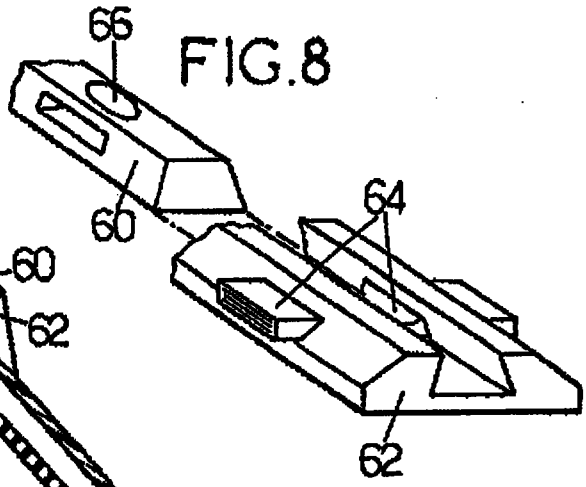

This Sheet Has Been Replaced



REPLACEMENT SHEETS SG
☑ Description : paged ...1. to paged ...8...
☑ Claim(s) : paged ...9. to paged ...10...
☑ Drawing(s) : paged ...1. to paged ...3...
☑ Abstract : paged ..11. to paged .....
DATE OF RECEIPT 27 DEC 1996

PROTECTIVE EQUIPMENT FOR THE HEAD COMPRISING A BREATHING MASK AND AN OPTICAL SCREEN

The present invention relates to protective equipment for the head of the type comprising a breathing mask provided with a harness and connectable to a source of breathing gas enabling the mask to be put under positive pressure relative to the atmosphere, and a screen for protecting the eyes against smoke, the screen being provided with a peripheral sealing gasket for pressing against the face and the mask, the screen and the mask being separate and distinct from each other.

Such protective equipment for the head of the type defined above is already known. The breathing mask, provided with a regulator, protects the wearer of the mask against lack of oxygen and against smoke or toxic gases penetrating into the respiratory tract. The harness serves to press the mask against the face with sufficient pressure to ensure sealing. When it is in place, the protective screen protects the eyes against smoke and irritating gases.

A major, but non-exclusive application of the invention lies in aviation. The mask is then designed in particular to provide protection against lack of oxygen in the event of pressurization being lost at high altitude, thus requiring the mask to be provided with a demand regulator for feeding gas at positive pressure as a function of altitude, and requiring the harness to be capable of pressing the mask against the face with sufficient force to prevent leaks appearing that would otherwise reduce the positive pressure inside the mask. To satisfy these conditions, the harness may be constituted by a strap that exerts a force which is adjustable either automatically (e.g. by modifying an internal pressure when the straps are extensible by inflation), or manually (e.g. when the harness includes not only pneumatically extensible straps, but also cloth

REPLACEMENT SHEET
27 DEC 1996

REPLACEMENT SHEET
27 DEC 1996

straps that are loose while the mask is in the storage position and that can be tightened manually).

Mask-and-screen assemblies have already been proposed that comprise a single block (US design patent 304 384), thereby presenting a solution that is satisfactory when the mask is designed to be installed only an emergency. That solution is often unacceptable in other cases, e.g. equipment for pilots and copilots of transport aircraft which are required by regulations to carry equipment for providing protection against lack of oxygen on a permanent basis under certain flying conditions, in particular at very high altitude or when only one pilot is present in the cockpit. Under such circumstances, the screen constitutes a hindrance and also gives rise to a feeling of claustrophobia.

The present invention seeks in particular to provide protective equipment for the head that satisfies practical requirements better than previously known equipment, in particular with respect to making it possible or at least more convenient to use the mask on its own and to install the screen quickly in the event of need, or else to use the regulator mask with the screen mounted in place and to enable the screen portion to be removed if the user so desires. To this end, the invention provides, in particular, equipment of the type defined above, characterized in that it includes means for locking the screen on the mask, which means are manually releasable, and bear against the mask so as to press the gasket against the face.

To prevent smoke or toxic gas or irritating gas being kept in contact with the eyes, and to prevent condensation forming on the screen, the screen is advantageously provided with means that automatically open an inlet to allow breathing gas inside the mask to pass into the screen when the screen has been put into place and locked in position. The positive pressure relative to the atmosphere (which is always necessary

REPLACEMENT SHEET
27 DEC 1996

inside the mask, even at normal atmospheric pressure, in order to ensure that the same smoke or gases cannot gain access to the respiratory tract) then causes breathing gas to pass into the screen, thereby sweeping out any smoke or gas that may have been captured therein.

The harness may be a harness for fitting rapidly, and suitable for fitting to any size of head or helmet (such as those described in document EP-A-028839 and French patent application FR 9211342, for example); it may be alternatively be constituted by straps provided with buckles for tightening purposes, and that is particularly appropriate when there is no need for the harness to be put on rapidly.

The invention will be better understood on reading the following description of particular embodiments given as non-limiting examples. The description refers to the accompanying drawings, in which:

Figure 1 shows the outside appearance of protective equipment constituting an embodiment of the invention, using a mask that is provided with a demand regulator and with a harness having inflatable straps;

Figure 2 is a fragmentary section through a portion of the mask and the screen, showing the means designed to provide communication between the inside of the mask and the inside of the screen when the screen is put into place;

Figure 3 is a section view showing one possible structure of the means for locking the screen on the mask;

Figure 4 is a detail perspective view showing the portion of the Figure 3 locking means that is carried by the mask;

Figures 5 and 6 are similar to Figures 3 and 4 showing another embodiment of the locking means;

Figures 7 and 8, likewise similar to Figures 3 and 4, show yet another variant; and

REPLACEMENT SHEET
27 DEC 1996

Figure 9 is a diagrammatic section view showing means that enable the pressure with which the mask is applied against the face to be increased when screen locking is being put into place, so as to compensate for the additional lifting force due to the behavior of the face when the mask is used at positive relative pressure.

The protective equipment shown diagrammatically in Figures 1 and 2 comprises a mask and a harness of generally known structure. For example, a description thereof may be found in document EP-A-0 288 391. The mask comprises a facepiece 10 that is fixed to a demand regulator 12 associated with a rigid connection block 14. The block 14 is secured to a shell 16 covering the front of the facepiece. The connection block 14 is designed to be connected to a source of breathing gas under pressure (generally oxygen under pressure) via a flexible hose 15. The harness shown by way of example has two straps 18 each constituted by an inner tube of resilient material contained within an inextensible sheet that puts a limit on elongation of the tube, said straps being connected to the block 14. The sheaths are of a length that enables the harness to be passed over heads of all sizes when both tubes are inflated by pressing on handles 20. The resilience of the tubes is sufficient to ensure suitable clamping on the head to enable the breathing equipment to be used when it is fed with gas under pressure.

The screen 22 includes a transparent window 24 of optical quality whose edges are held captive in a sealing gasket 26 and which is extended by a block 28 for fixing on the shell of the mask.

The top portion of the sealing gasket 26 that is designed to bear against the forehead and the temples may be of conventional structure. The bottom portion of the gasket which needs to bear against zones of the face and of the shell that include concave portions, is advantageously constituted in the form of a strip of foam material so as to achieve a large area of contact. In

REPLACEMENT SHEET
27 DEC 1996

use, this bottom portion is received beneath the top strap 18. To make it easier to put the mask into place, the top strap can be moved away from the face in its zone close to its connection with the shell, e.g. by guiding it for a few centimeters over a length of rigid tube. In a variant embodiment, the bottom portion of the sealing gasket is wedge-shaped so as to lift the top strap when the screen is put into place on a mask that is already being worn by the user.

The screen 22 and the mask are advantageously designed in such a manner as to organize a flow of breathing gas inside the screen when the screen is in place. In particular, it is possible to admit breathing gas automatically or otherwise from the inside of the mask into the inside of the screen via means that are closed so long as the screen is not in place. The breathing gas may escape by leaking between the gasket and the skin. Slots may also be provided in the top portion of the gasket so as to guide the sweeping air.

By way of example, Figure 2 shows breathing gas admission means comprising a valve suitable for placing in part on the top edge of the shell of the mask and in part on the gasket 10. This valve comprises a seat 30 pierced by holes and placed in the facepiece, and a closure lever 32 rotating on a pin 34 belonging to the shell. Sealing is provided by the gasket 31. A spring 36 urges the lever 32 towards the seat 30. The fixing block 28 belonging to the screen includes a tab 38 which, when the screen is in place, bears against one of the levers 32 in such a manner as to raise the other end away from the seat 30, thereby opening communication with the inside of the screen. Other structures would naturally be possible.

The fixing block 28 is designed to allow rapid installation on the shell 16 of the mask. The fixing means may be of very different structures, and only a few embodiments are given by way of example.

REPLACEMENT SHEET
27 DEC 1996

In the embodiment shown in Figures 3 and 4, the fixing block of the screen includes a slide 40 having balls 42 urged towards projecting positions by respective springs. The slide is designed to engage in a slideway 44 secured to the shell 16. Housings 46 are provided in the slideway to receive the balls and to lock the slide 40 automatically. Two pushers 48 are placed on either side of the slideway for pushing in the balls and for allowing the screen to be unlocked manually when it is no longer useful and can be removed. In a variant, the slideway is fixed to the screen and the slide to the shell.

In the variant embodiment shown in Figures 5 and 6, a soft iron bar 50 is incorporated in the fixing block 28. This bar is designed to engage in a slideway 52 that is secured to the shell 16 and to be retained therein by an electromagnetic field created by coils 54 embodied in the slideway, whenever said coils are powered. The coil power supply is provided with means such as a tab 56 placed so as to be actuated by the bar 50 at the end of its insertion stroke. Unlocking can be performed by acting manually on a switch, using a pushbutton 58 similar to the pushbuttons 48 of Figure 4.

It is also possible to provide retention by means of permanent magnets having an attractive force that is selected so as to hold the screen effectively while still leaving it possible to exert manual force to remove the mask against the action of the permanent magnets.

In the embodiment shown in Figures 7 and 8, the mask is locked manually after being put into place. The fixing block secured to the screen again includes a slide 60 which is designed to engage in a slideway 62 secured to the shell 16. Two manually-controlled latches 64 enable the slide to be locked in place once fully engaged, by being moved into engagement therewith under drive from the fingers of the user. Unlocking can then be achieved by using a button 66 that is held captive in

REPLACEMENT SHEET
27 DEC 1996

the slide 60 and that is pushed into a projecting position as shown in Figure 7 when the latches 64 are themselves pushed home. The user unlocks the screen by pressing on the button 66 which acts on sloping surfaces of the latches to move them apart from each other and to disengage them from the slide. In a variant embodiment, the latches 64 are urged towards each other by springs.

When the regulator mask (facepiece) is suitable for being fed at positive relative pressure, it is advantageous to provide a fixing block that increases the pressure with which the screen is pressed against the face. Figure 9 shows means that can be provided for achieving this result.

In the example shown in Figure 9, the fixing block includes a guide 68 designed to engage in a base 70 which may be integral with the slideway belonging to the mask fixing means. The guide is hinged behind a lever 72. A spring 74 is interposed between the other end of the lever and the guide 68.

In general, the screen does not have its own harness and the fixing block 28 is designed to press the sealing gasket 26 against the face with sufficient force in spite of the fact that the screen is cantilevered out relative to the mask. Nevertheless, it is also possible to provide a cloth strap on the harness. This strap is then relaxed or open except during periods of use so that it does not impede putting the screen into place.

In an aircraft, the equipment is generally stored in a box within reach of the pilot. When not in use, the mask is stored together with the screen locked thereon, so that in an emergency the pilot can place the mask-and-screen assembly on the face, can have breathing oxygen available in the locations specified by the regulations in force, and can be protected against smoke. If circumstances then do not require a screen to be worn, the pilot can take it off. To prevent the screen being forgotten, the storage box is advantageously designed in

such a manner that the mask cannot be put back into place therein without the screen being fixed to the mask.

REPLACEMENT SHEET
27 DEC 1996

REPLACEMENT SHEET
27 DEC 1996

* C L M S *

CLAIMS

1/ Protective equipment for the head comprising a breathing mask fitted with a harness and connectable to a source of breathing gas, and including a screen (22) for protecting the eyes against smoke, the screen being provided with a peripheral sealing gasket (26) that presses against the face and against the mask, which mask and screen are separate parts;

the equipment being characterized in that it includes means for locking the screen on the mask, which means are manually releasable, and bear against the mask so as to press the gasket against the face.

2/ Equipment according to claim 1, characterized in that said screen (22) includes means (38) providing communication between the inside of the mask and the inside of the screen on their being locked together.

3/ Equipment according to claim 2, characterized in that said means comprise at least one valve seat (30) placed on the mask in a location such as to open out inside the screen, and means (38) for forced opening of the valve when the screen is put into place.

4/ Equipment according to claim 1, characterized in that the screen and the mask carry means (68, 74) for increasing the mechanical pressure with which the gasket is applied to the face while the screen is locked in place.

5/ Equipment according to claim 4, characterized in that the screen does not have its own harness.

6/ Equipment according to claim 1, characterized in that the locking means comprise a slide (40, 60) fixed to the screen or to a rigid shell of the mask, and a slideway (44, 62) fixed to the shell.

* C L M S *

7/ Equipment according to claim 6, characterized in that the locking means further include balls (42) placed in the slide, urged towards a laterally projecting position in which they engage in housings in the slideway (44), and pushers (48) carried by the slideway and enabling the balls to be expelled from the housings.

8/ Equipment according to claim 6, characterized in that the locking means include latches (64) carried by the slideway (62) and manually displaceable into an engagement position within the slide (60).

9/ Equipment according to claim 6, characterized in that the locking means include magnetic or electromagnetic means (50, 54) carried by the screen and the mask.

10/ Equipment according to claim 1, characterized in that said harness is designed to leave insertion clearance for the bottom portion of the gasket (26) between the face and the portion of the harness close to its connection with the mask.

REPLACEMENT SHEET
27 DEC 1996

PROTECTIVE EQUIPMENT FOR THE HEAD COMPRISING A BREATHING MASK AND AN OPTICAL SCREEN

A B S T R A C T

The protective equipment for the head comprises a breathing mask provided with a harness and connectable to a source of breathing gas, together with a screen (22) for protecting the eyes against smoke, the screen being provided with a peripheral sealing gasket (26) that presses against the face and against the mask. The mask and the screen are distinct and separable. Manually releasable locking means lock the screen to the mask and bear against the mask so as to press the gasket against the face. The equipment is particularly intended for use by aircraft flight crew members.

Fig. 1

REPLACEMENT SHEET
27 DEC 1996

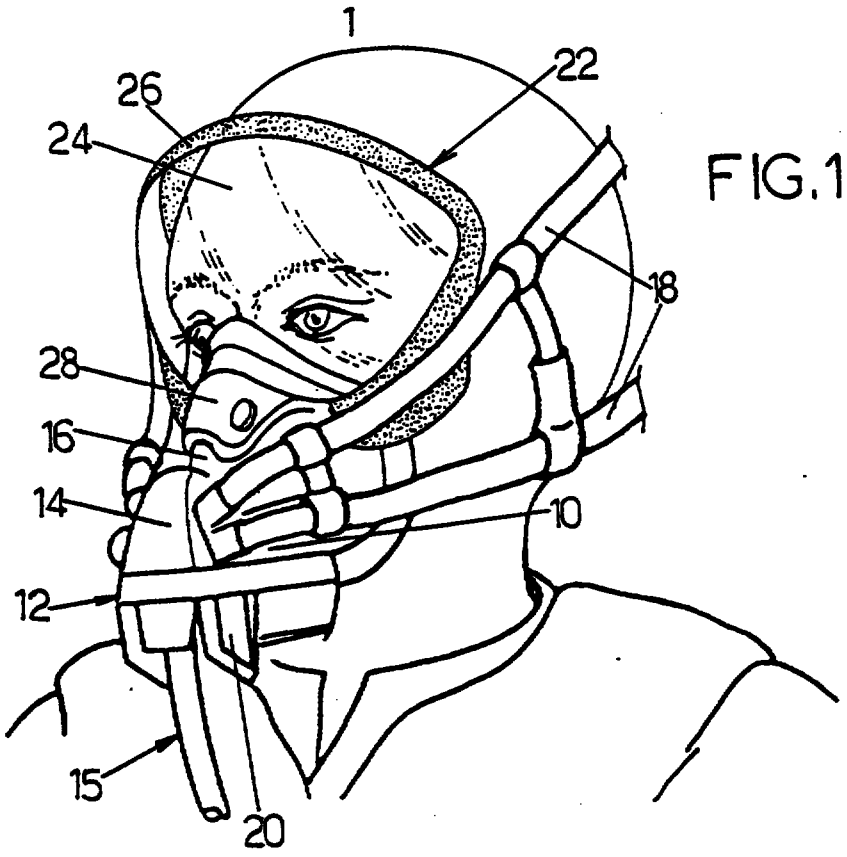

FIG.1.

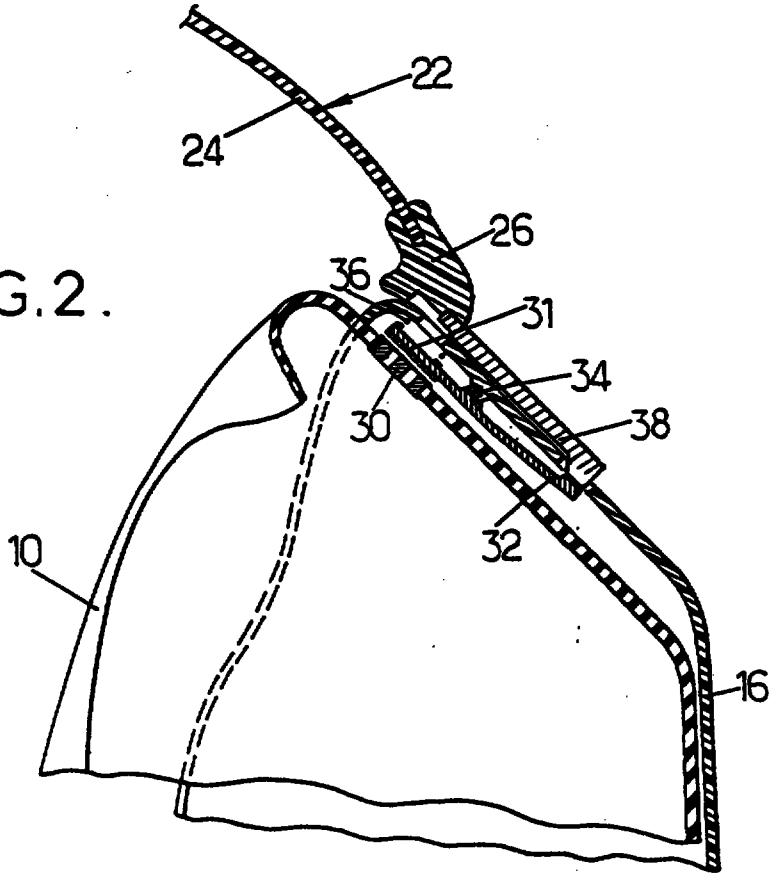

FIG.2.

REPLACEMENT SHEET
27 DEC 1996

FIG. 3.

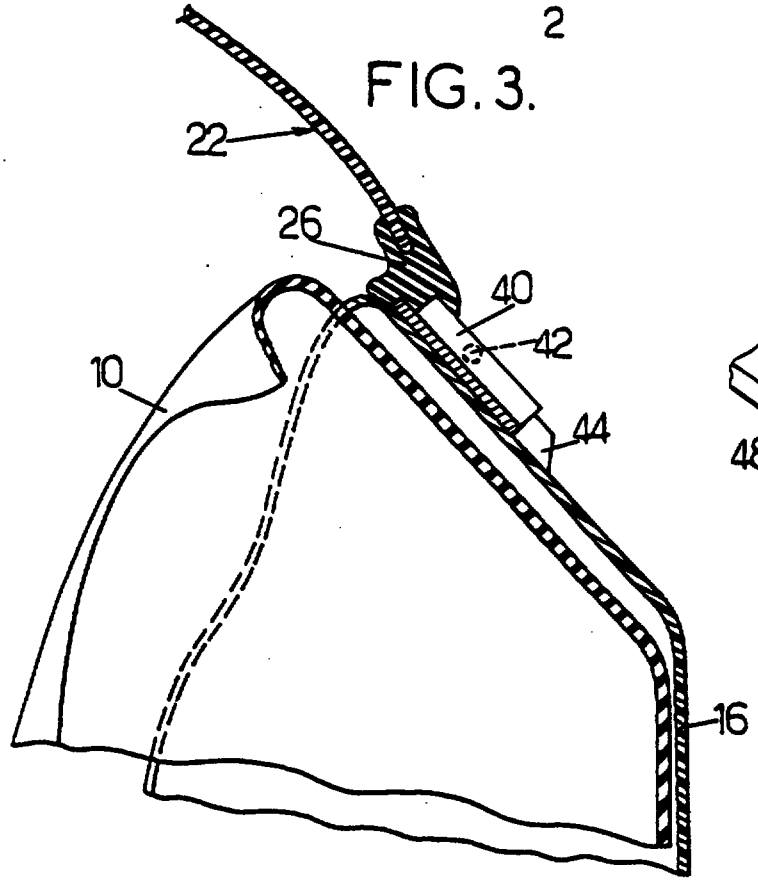

FIG. 4.

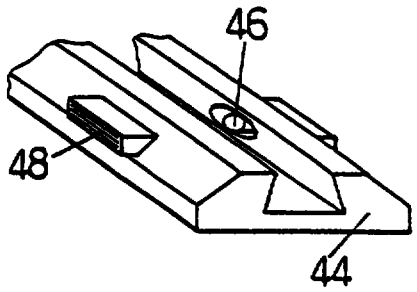

FIG. 9.

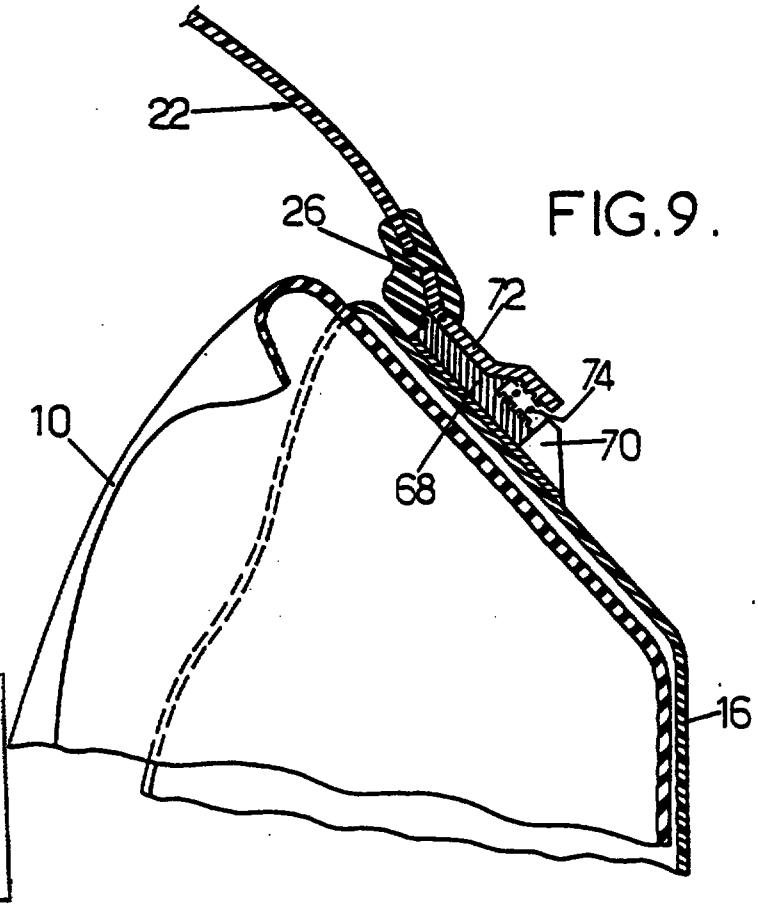

REPLACEMENT SHEET
27 DEC 1996

FIG.5.

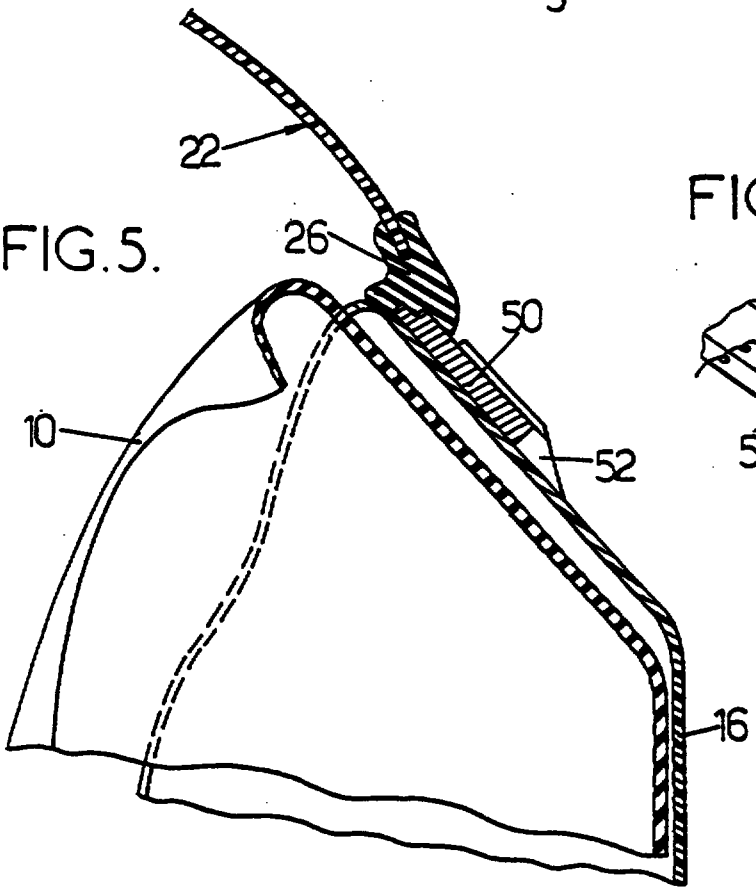

FIG.6.

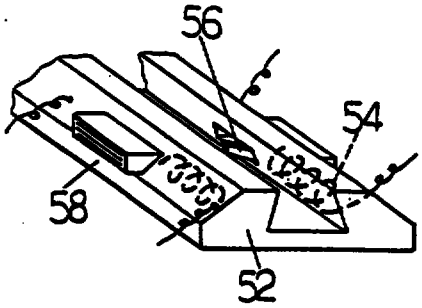

FIG.7.

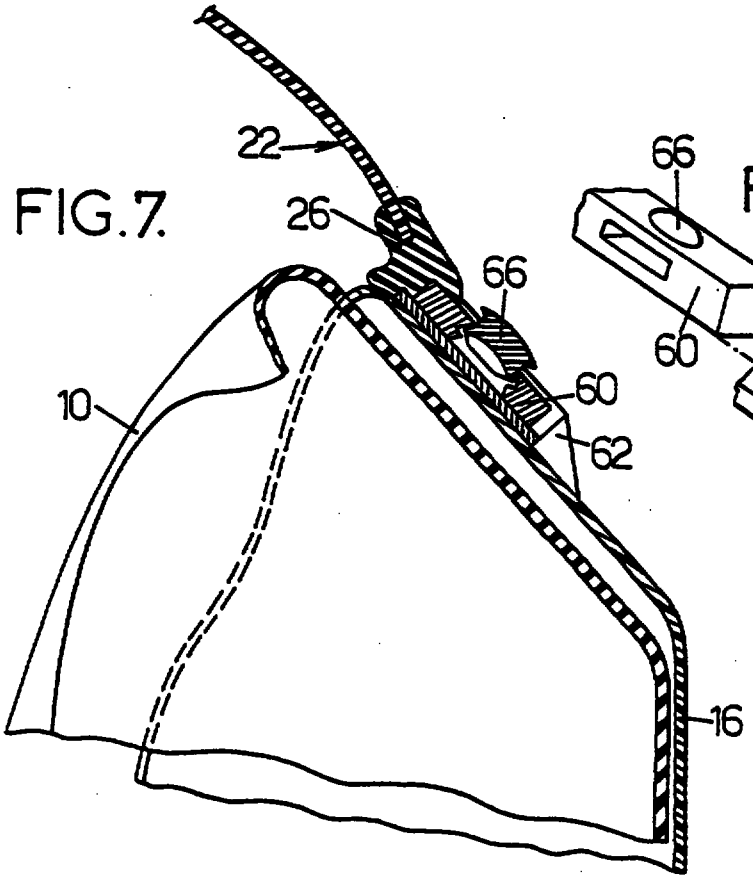

FIG.8

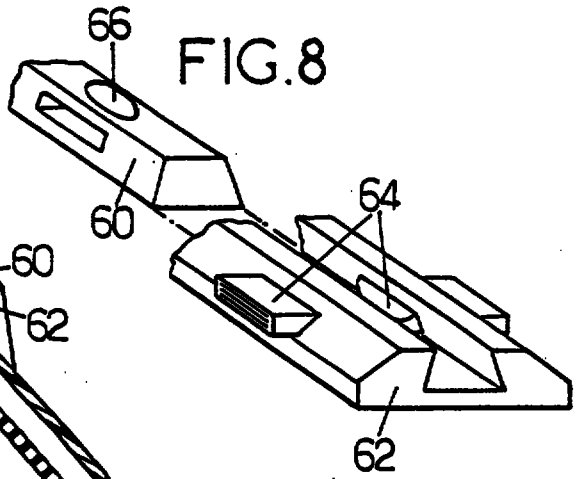

REPLACEMENT SHEET
27 DEC 1996