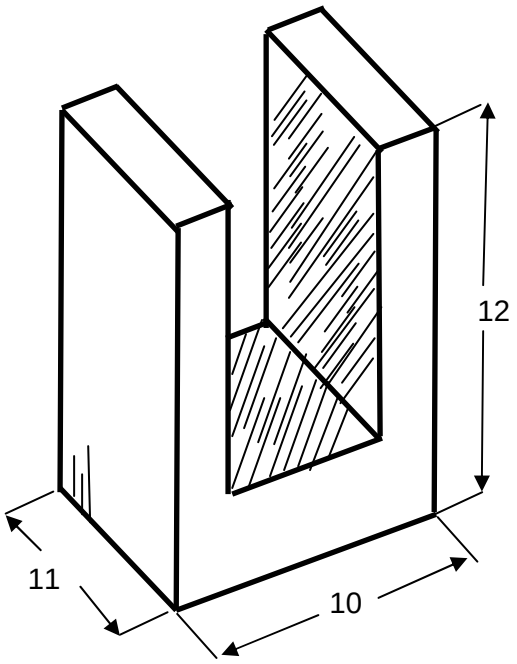

Figure 1: 3-dimenional view of the first material form into a U shape

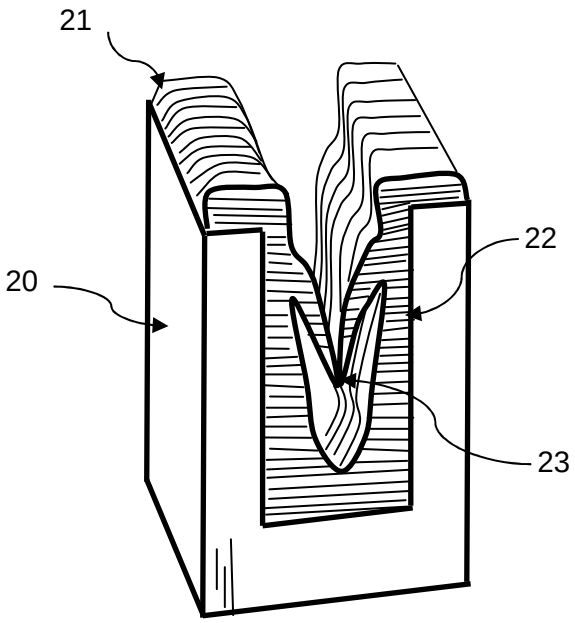

Figure 2: Cross sectional view of the second material partially encapsulating the first material with the ridges pointing down in the cavity

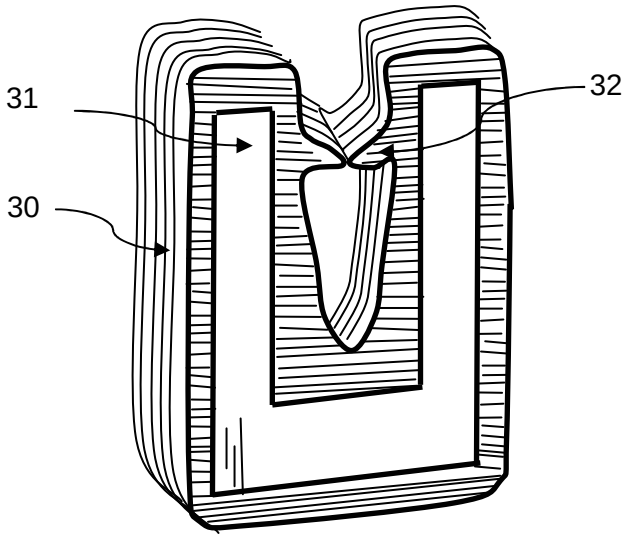

Figure 3: Cross sectional view of the second material fully encapsulating the first material with the ridges pointing at each other in the cavity

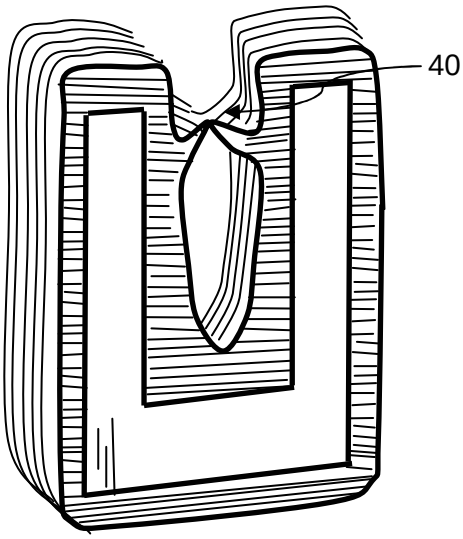

Figure 4: Cross-sectional view of the second material fully encapsulating the first material with the ridges pointing up in the cavity

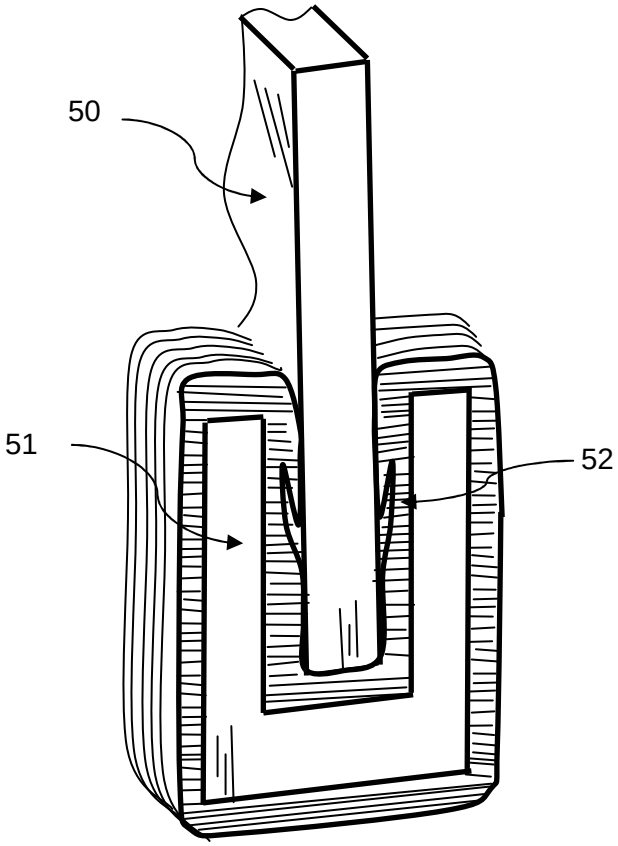

Figure 5: Cross-sectional view of the second material fully encapsulating the first material with a panel inserted in the cavity of the clamp

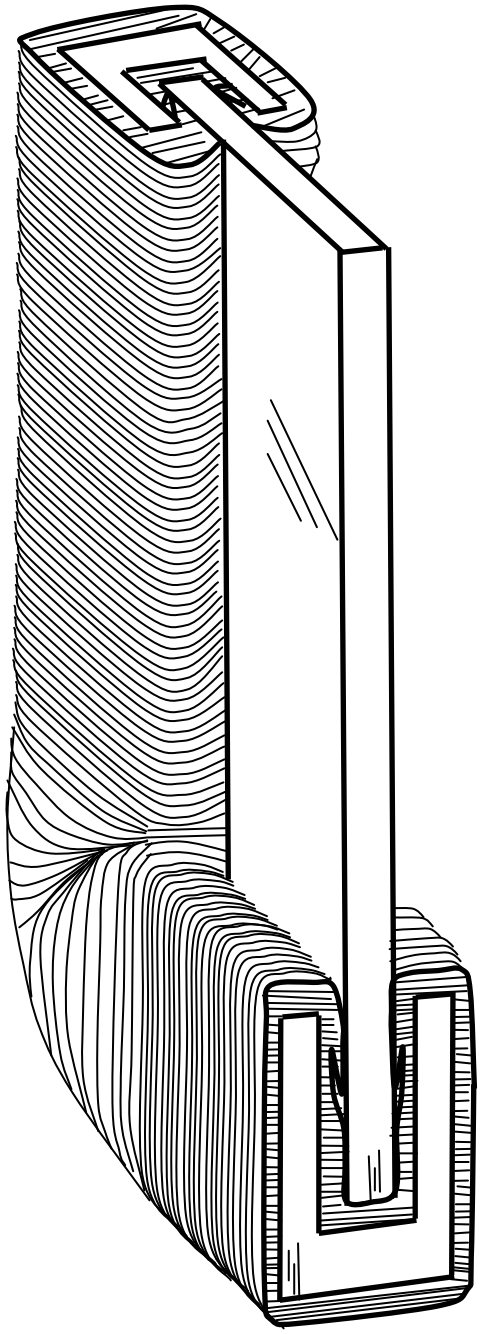

Figure 6: Cross sectional view of the clamp position orthogonally clamping a panel inserted in its cavity

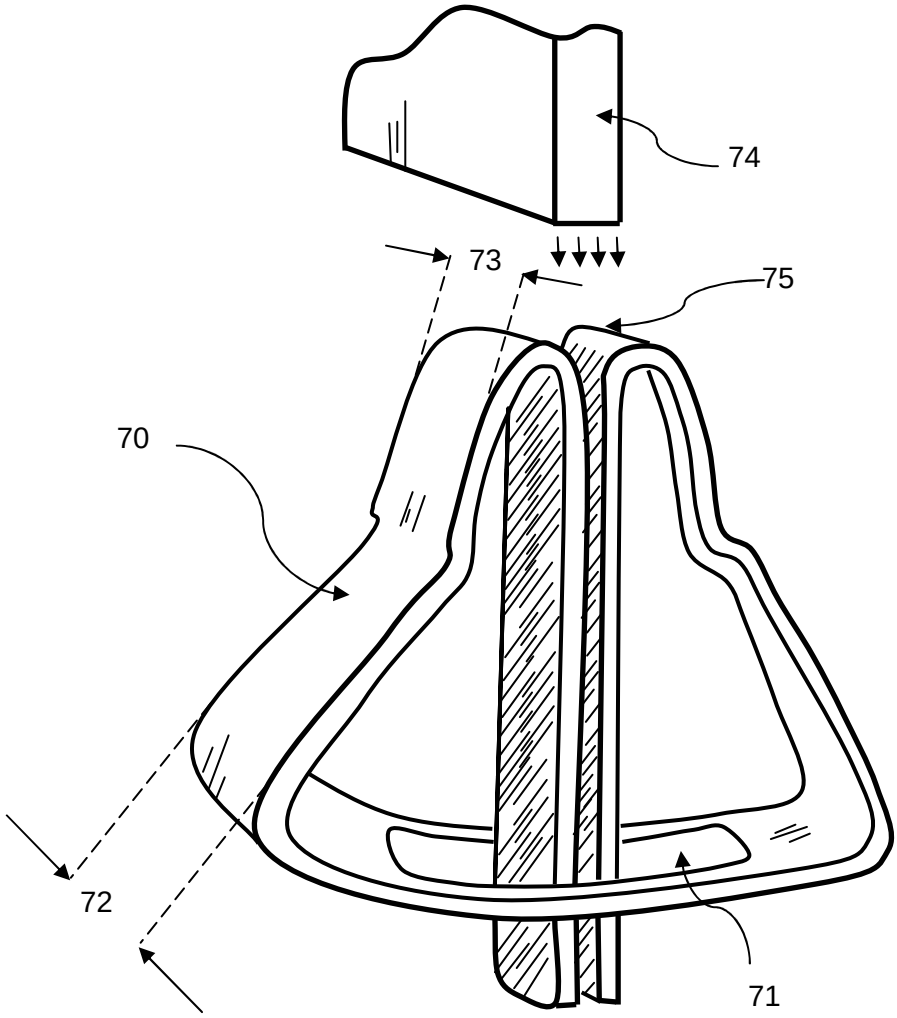

Figure 7: The second preferred embodiment with the core of first material bend into the shape as shown

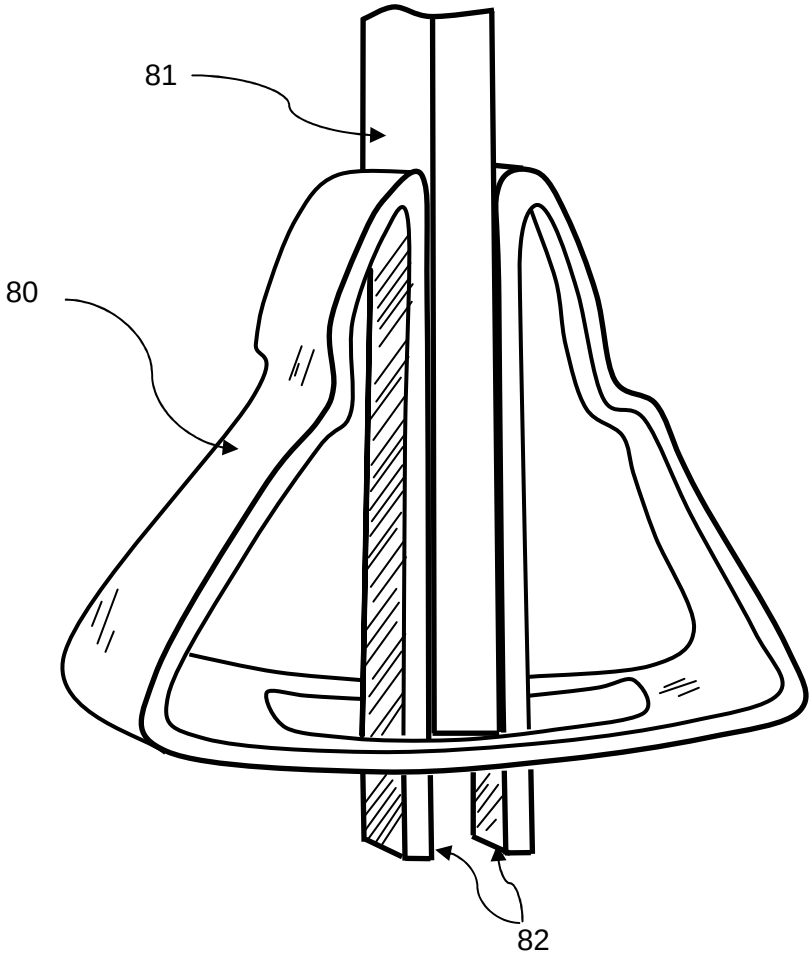

Figure 8: The second preferred embodiment with a panel inserted in the middle

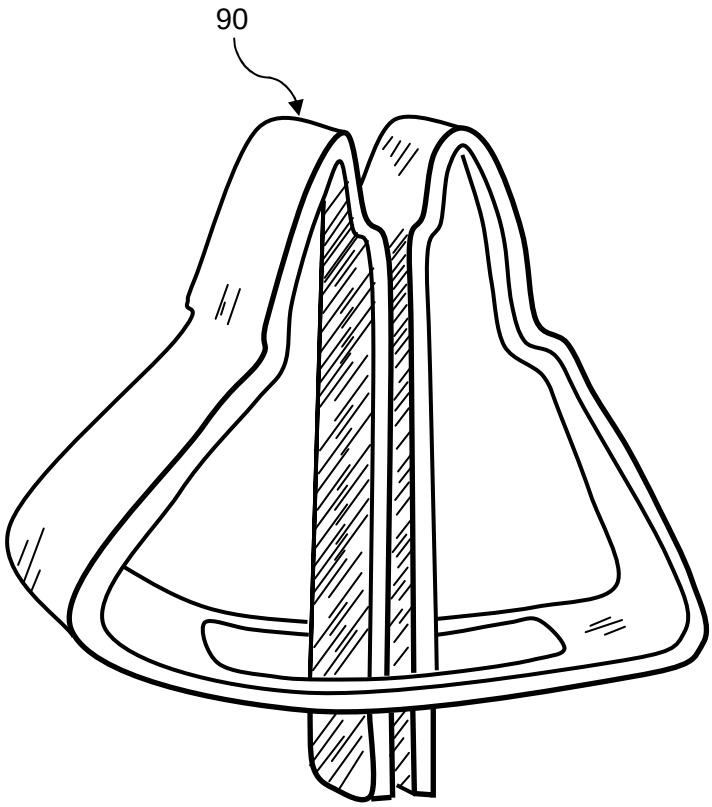

Figure 9: The third preferred embodiment with the core of first material bend into the shape as shown