Fig.1

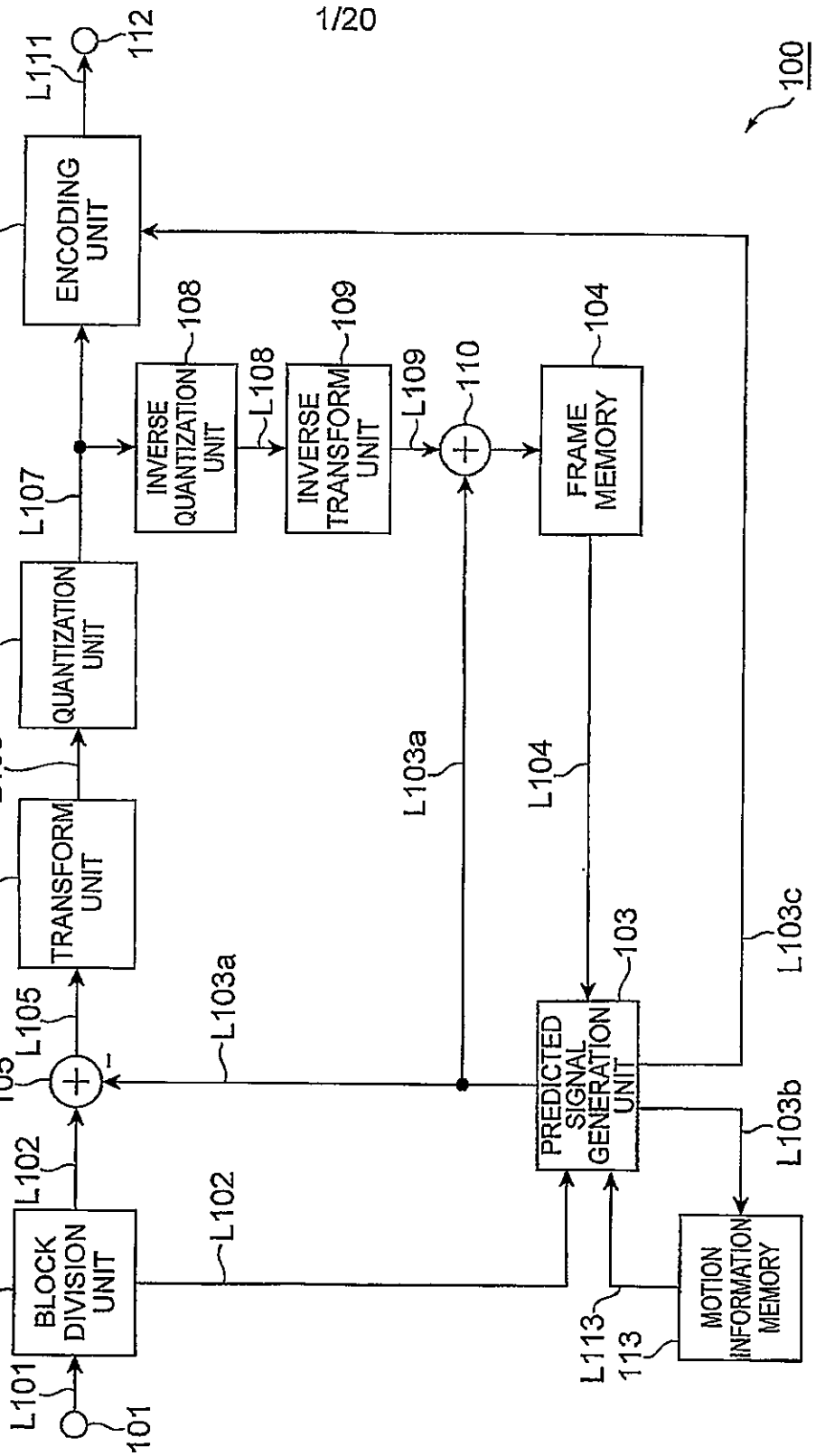
100
101
L101
102
BLOCK DIVISION UNIT
L102
105
L105
106
TRANSFORM UNIT
L106
107
QUANTIZATION UNIT
L107
108
INVERSE QUANTIZATION UNIT
L108
109
INVERSE TRANSFORM UNIT
L109
110
104
FRAME MEMORY
L103a
L104
103
PREDICTED SIGNAL GENERATION UNIT
L103b
L103c
111
ENCODING UNIT
L111
112
113
L113
MOTION INFORMATION MEMORY

Fig.2

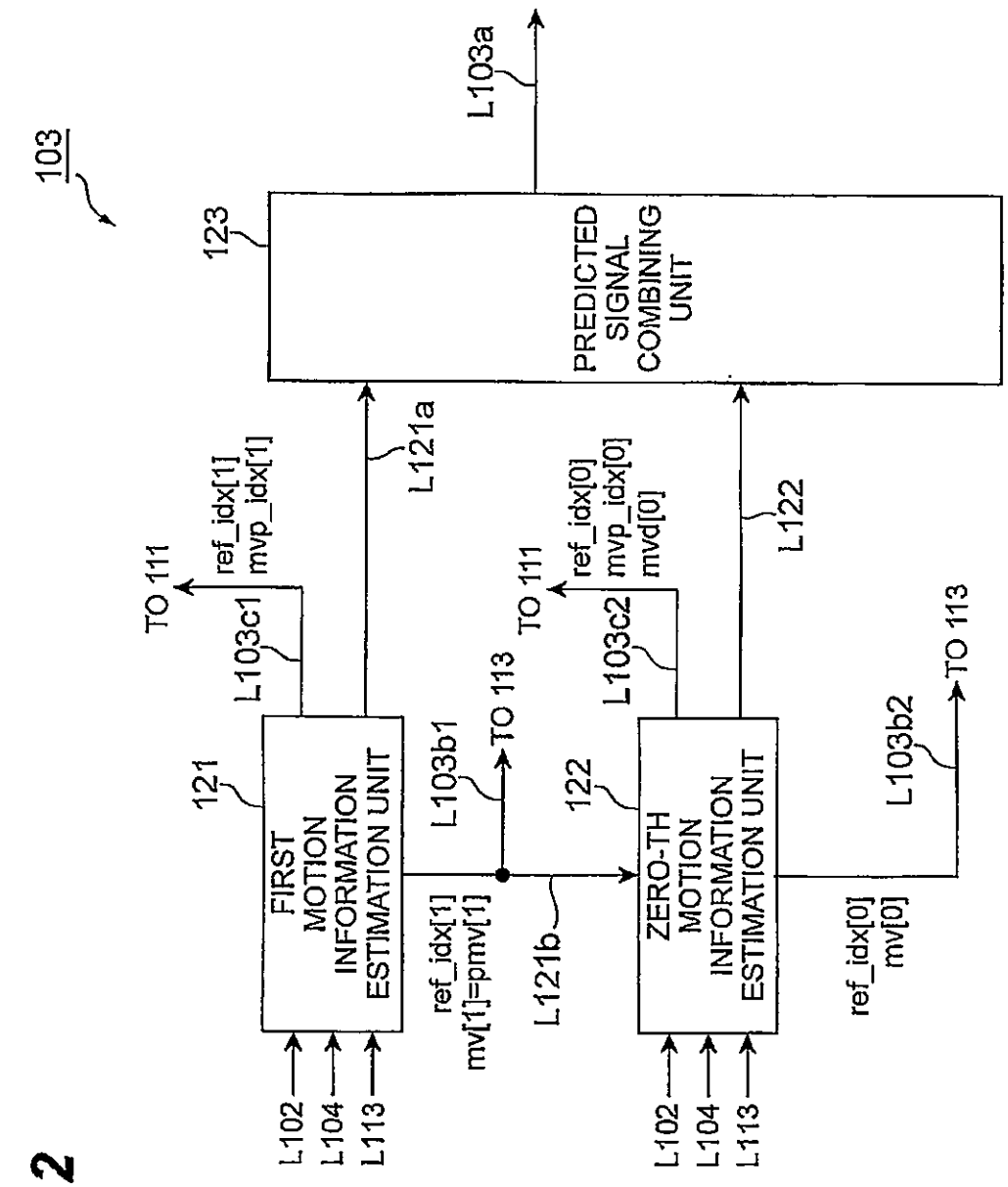
103
123
PREDICTED SIGNAL COMBINING UNIT
L103a
L121a
L122
121
FIRST MOTION INFORMATION ESTIMATION UNIT
122
ZERO-TH MOTION INFORMATION ESTIMATION UNIT
L103c1
L103c2
L103b1
L103b2
L121b
TO 111
TO 113
ref_idx[1]
mvp_idx[1]
ref_idx[0]
mvp_idx[0]
mvd[0]
ref_idx[1]
mv[1]=pmv[1]
ref_idx[0]
mv[0]
L102
L104
L113

Fig.3

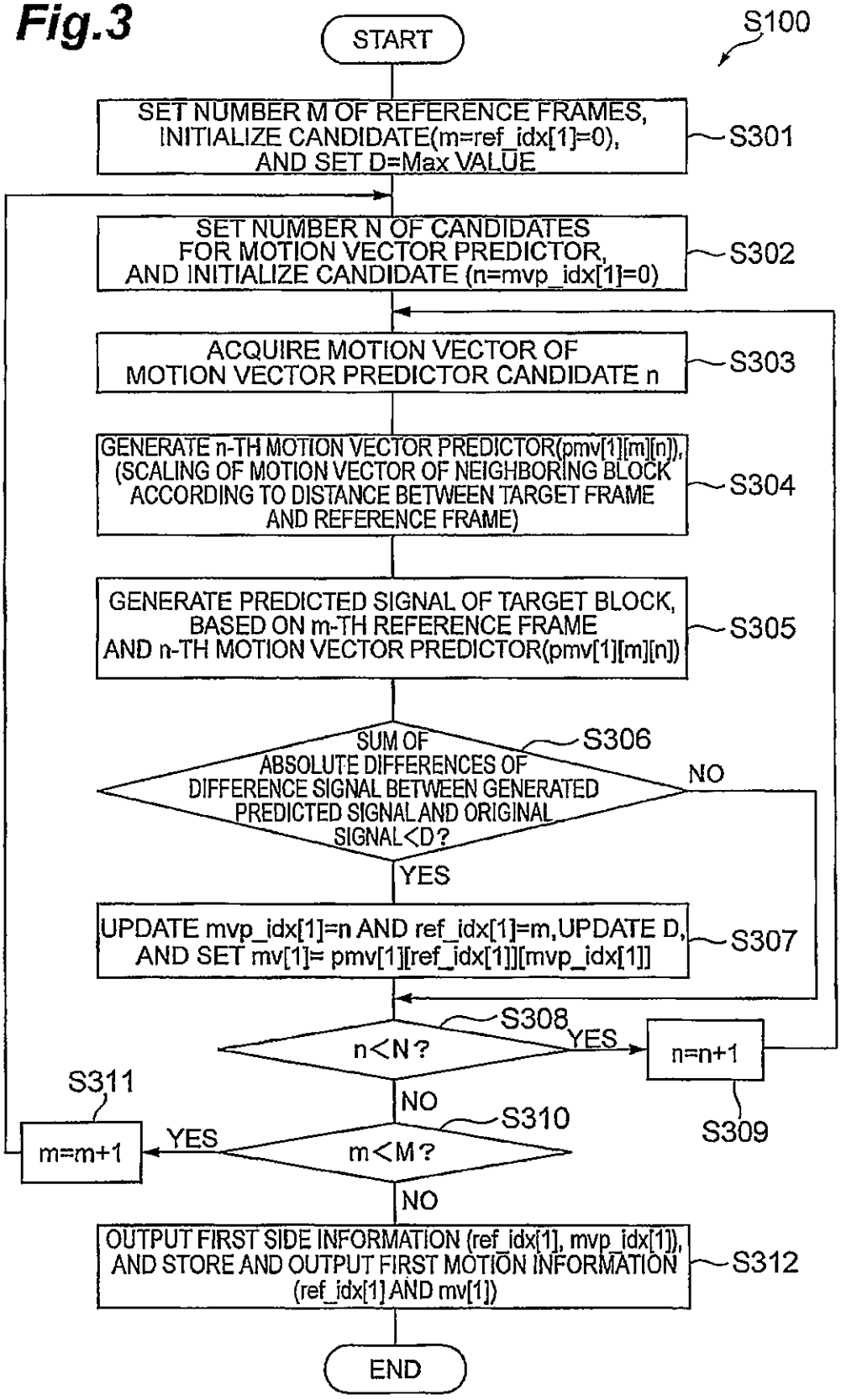
START
S100
SET NUMBER M OF REFERENCE FRAMES, INITIALIZE CANDIDATE(m=ref_idx[1]=0), AND SET D=Max VALUE
S301
SET NUMBER N OF CANDIDATES FOR MOTION VECTOR PREDICTOR, AND INITIALIZE CANDIDATE (n=mvp_idx[1]=0)
S302
ACQUIRE MOTION VECTOR OF MOTION VECTOR PREDICTOR CANDIDATE n
S303
GENERATE n-TH MOTION VECTOR PREDICTOR(pmv[1][m][n]), (SCALING OF MOTION VECTOR OF NEIGHBORING BLOCK ACCORDING TO DISTANCE BETWEEN TARGET FRAME AND REFERENCE FRAME)
S304
GENERATE PREDICTED SIGNAL OF TARGET BLOCK, BASED ON m-TH REFERENCE FRAME AND n-TH MOTION VECTOR PREDICTOR(pmv[1][m][n])
S305
SUM OF ABSOLUTE DIFFERENCES OF DIFFERENCE SIGNAL BETWEEN GENERATED PREDICTED SIGNAL AND ORIGINAL SIGNAL<D?
S306
NO
YES
UPDATE mvp_idx[1]=n AND ref_idx[1]=m, UPDATE D, AND SET mv[1]= pmv[1][ref_idx[1]][mvp_idx[1]]
S307
n<N?
S308
YES
n=n+1
S309
NO
m<M?
S310
YES
m=m+1
S311
NO
OUTPUT FIRST SIDE INFORMATION (ref_idx[1], mvp_idx[1]), AND STORE AND OUTPUT FIRST MOTION INFORMATION (ref_idx[1] AND mv[1])
S312
END

Fig.4

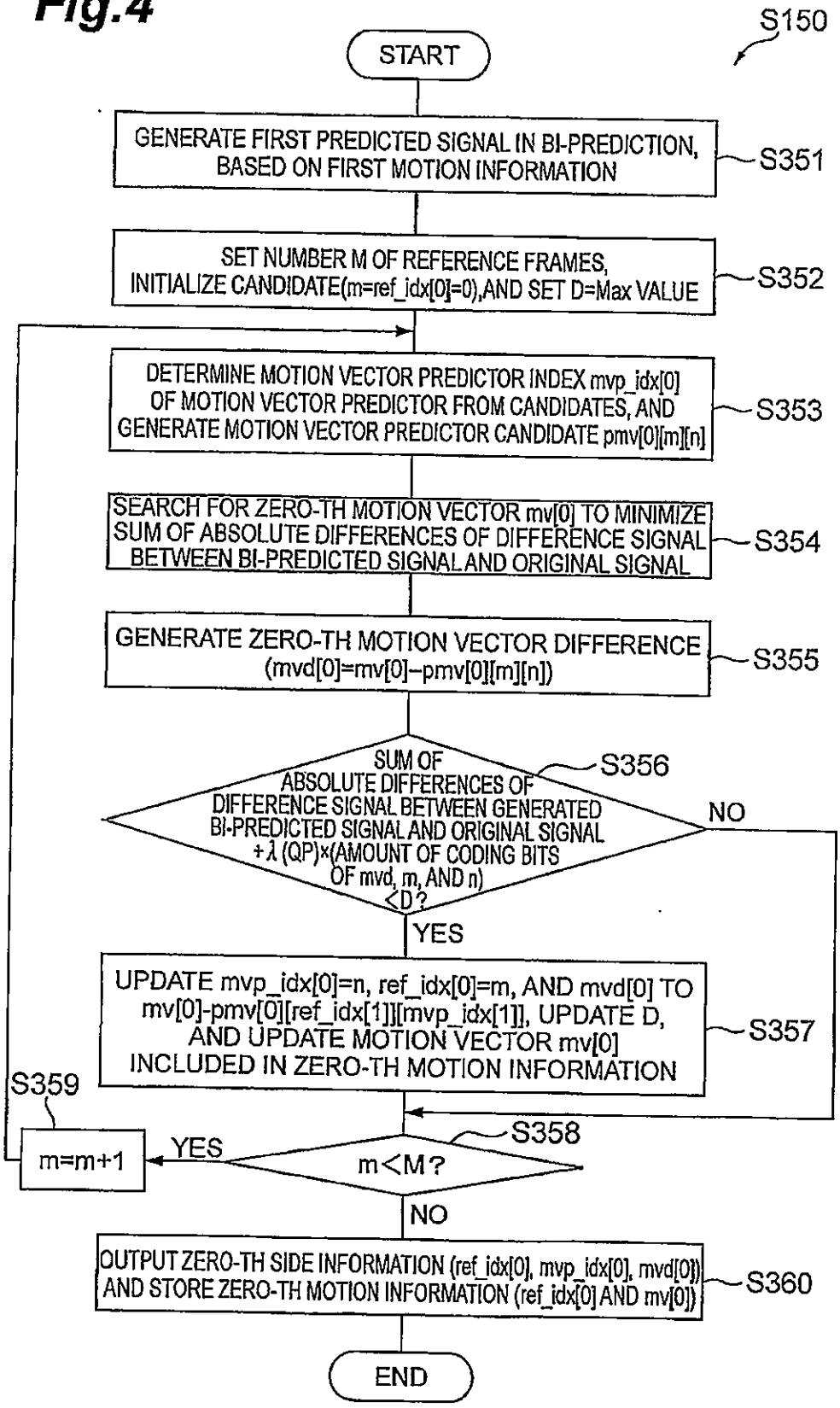
S150
START
GENERATE FIRST PREDICTED SIGNAL IN BI-PREDICTION, BASED ON FIRST MOTION INFORMATION
S351
SET NUMBER M OF REFERENCE FRAMES, INITIALIZE CANDIDATE(m=ref_idx[0]=0),AND SET D=Max VALUE
S352
DETERMINE MOTION VECTOR PREDICTOR INDEX mvp_idx[0] OF MOTION VECTOR PREDICTOR FROM CANDIDATES, AND GENERATE MOTION VECTOR PREDICTOR CANDIDATE pmv[0][m][n]
S353
SEARCH FOR ZERO-TH MOTION VECTOR mv[0] TO MINIMIZE SUM OF ABSOLUTE DIFFERENCES OF DIFFERENCE SIGNAL BETWEEN BI-PREDICTED SIGNAL AND ORIGINAL SIGNAL
S354
GENERATE ZERO-TH MOTION VECTOR DIFFERENCE (mvd[0]=mv[0]−pmv[0][m][n])
S355
SUM OF ABSOLUTE DIFFERENCES OF DIFFERENCE SIGNAL BETWEEN GENERATED BI-PREDICTED SIGNAL AND ORIGINAL SIGNAL + λ (QP)×(AMOUNT OF CODING BITS OF mvd, m, AND n) <D?
S356
NO
YES
UPDATE mvp_idx[0]=n, ref_idx[0]=m, AND mvd[0] TO mv[0]-pmv[0][ref_idx[1]][mvp_idx[1]], UPDATE D, AND UPDATE MOTION VECTOR mv[0] INCLUDED IN ZERO-TH MOTION INFORMATION
S357
S359
m=m+1
YES
m<M?
S358
NO
OUTPUT ZERO-TH SIDE INFORMATION (ref_idx[0], mvp_idx[0], mvd[0]) AND STORE ZERO-TH MOTION INFORMATION (ref_idx[0] AND mv[0])
S360
END

Fig.5

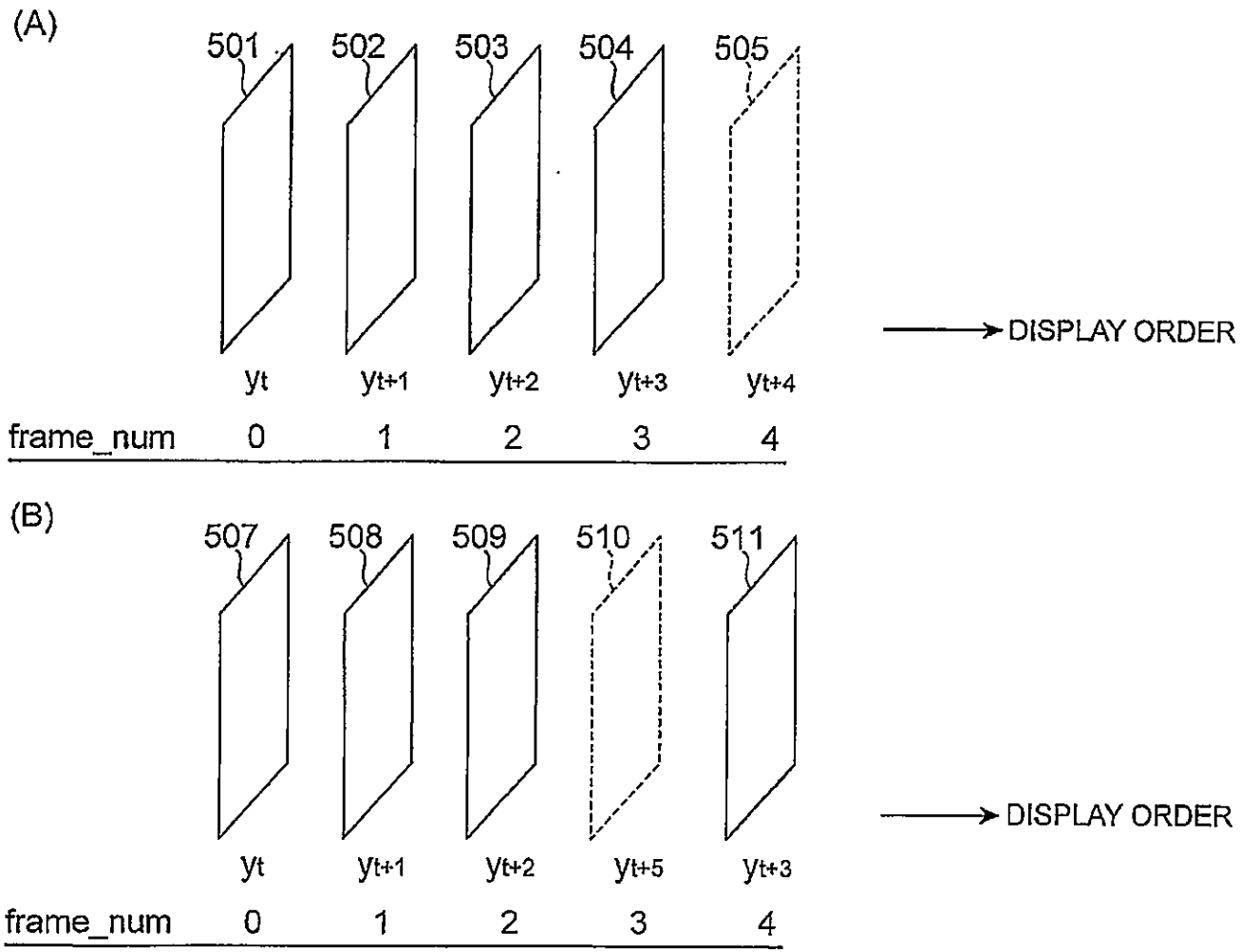
(A)
501
502
503
504
505
DISPLAY ORDER
yt
yt+1
yt+2
yt+3
yt+4
frame_num
0
1
2
3
4
(B)
507
508
509
510
511
DISPLAY ORDER
yt
yt+1
yt+2
yt+5
yt+3
frame_num
0
1
2
3
4

Fig.6

(A)

ref_idx	List0	List1
0	frame_num=3	frame_num=3
1	frame_num=2	frame_num=2
2	frame_num=1	frame_num=1
3	frame_num=0	frame_num=0

521

(B)

ref_idx	List0	List1
0	frame_num=2	frame_num=4
1	frame_num=1	frame_num=0

522

(C)

ref_idx	List0	List1
0	frame_num=2	frame_num=4
1	frame_num=1	frame_num=2
2	frame_num=0	frame_num=1
3	frame_num=4	frame_num=0

523

Fig.7

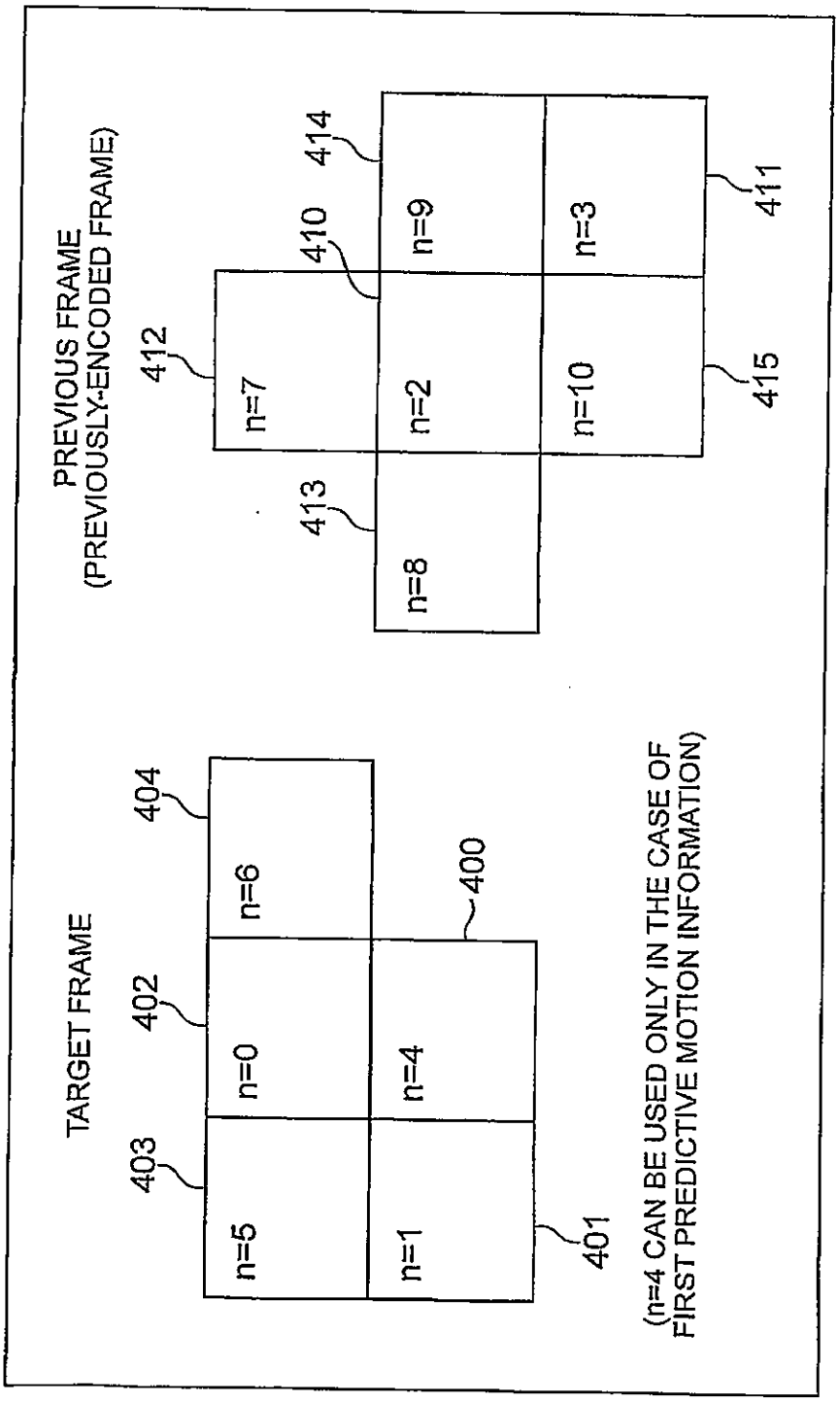
TARGET FRAME
PREVIOUS FRAME
(PREVIOUSLY-ENCODED FRAME)
n=5
n=0
n=6
n=1
n=4
n=7
n=2
n=9
n=8
n=10
n=3
400
401
402
403
404
410
411
412
413
414
415
(n=4 CAN BE USED ONLY IN THE CASE OF
FIRST PREDICTIVE MOTION INFORMATION)

Fig.8

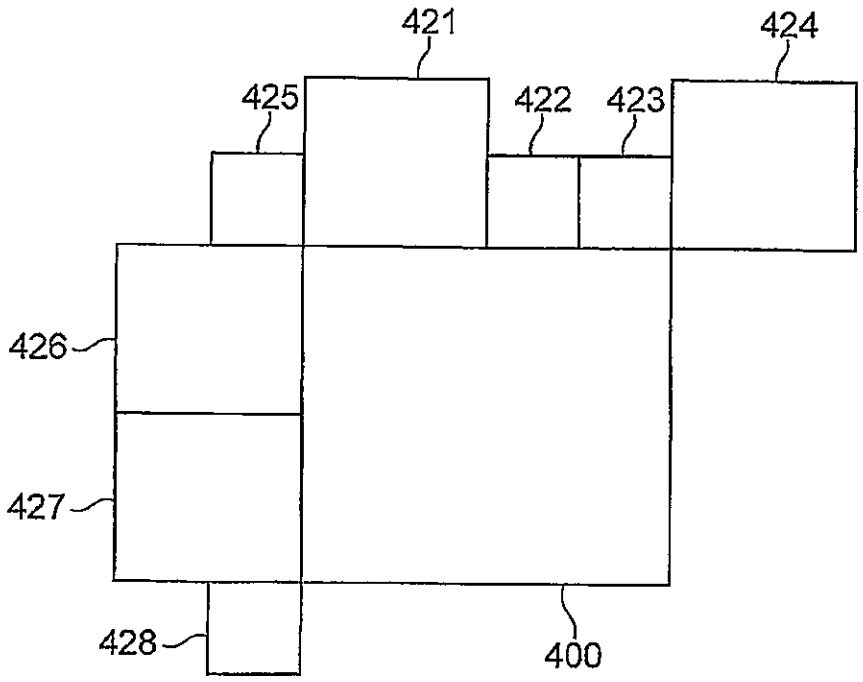

Fig.9

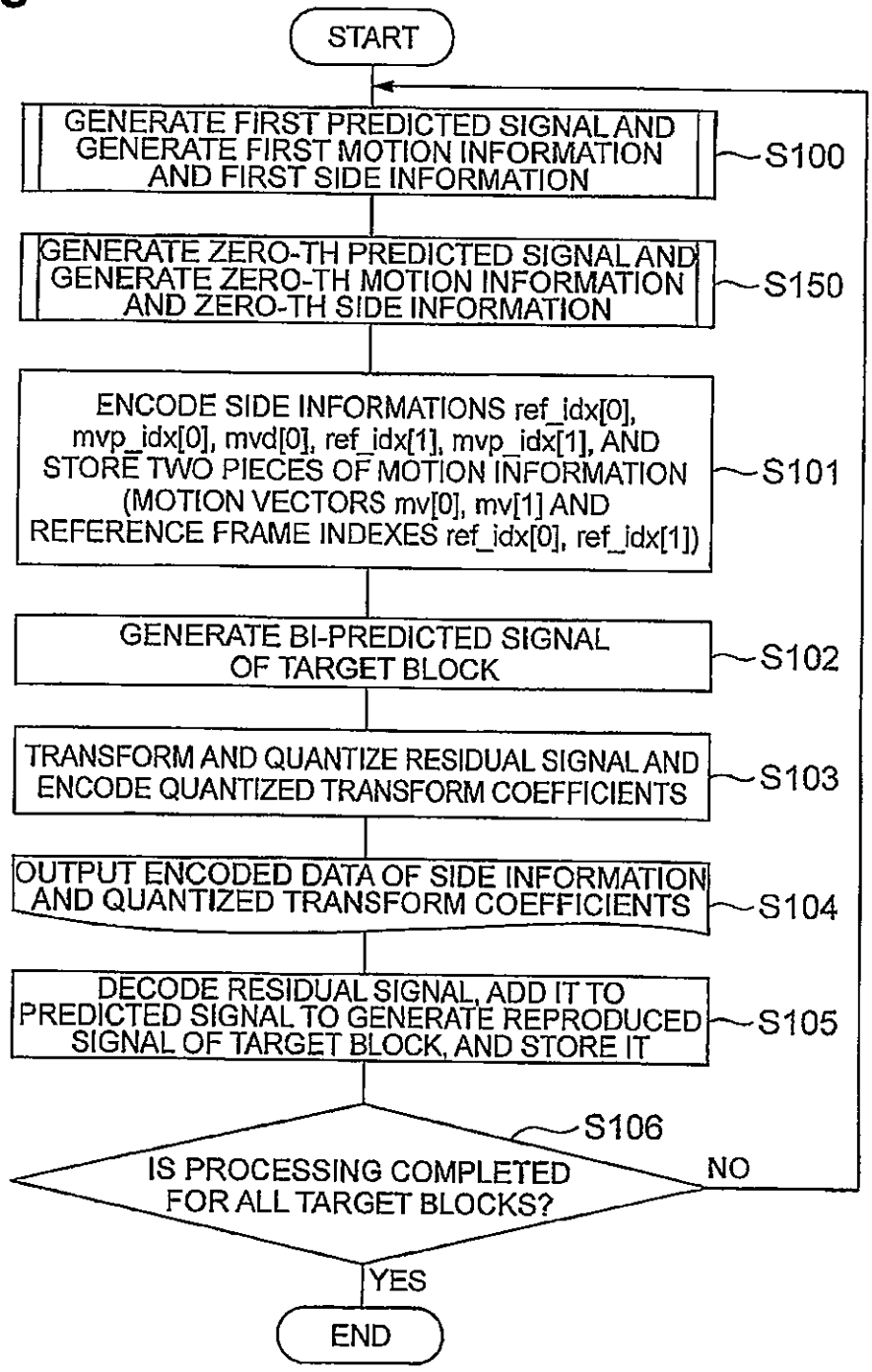
START
GENERATE FIRST PREDICTED SIGNAL AND GENERATE FIRST MOTION INFORMATION AND FIRST SIDE INFORMATION
S100
GENERATE ZERO-TH PREDICTED SIGNAL AND GENERATE ZERO-TH MOTION INFORMATION AND ZERO-TH SIDE INFORMATION
S150
ENCODE SIDE INFORMATIONS ref_idx[0], mvp_idx[0], mvd[0], ref_idx[1], mvp_idx[1], AND STORE TWO PIECES OF MOTION INFORMATION (MOTION VECTORS mv[0], mv[1] AND REFERENCE FRAME INDEXES ref_idx[0], ref_idx[1])
S101
GENERATE BI-PREDICTED SIGNAL OF TARGET BLOCK
S102
TRANSFORM AND QUANTIZE RESIDUAL SIGNAL AND ENCODE QUANTIZED TRANSFORM COEFFICIENTS
S103
OUTPUT ENCODED DATA OF SIDE INFORMATION AND QUANTIZED TRANSFORM COEFFICIENTS
S104
DECODE RESIDUAL SIGNAL, ADD IT TO PREDICTED SIGNAL TO GENERATE REPRODUCED SIGNAL OF TARGET BLOCK, AND STORE IT
S105
S106
IS PROCESSING COMPLETED FOR ALL TARGET BLOCKS?
NO
YES
END

Fig.10

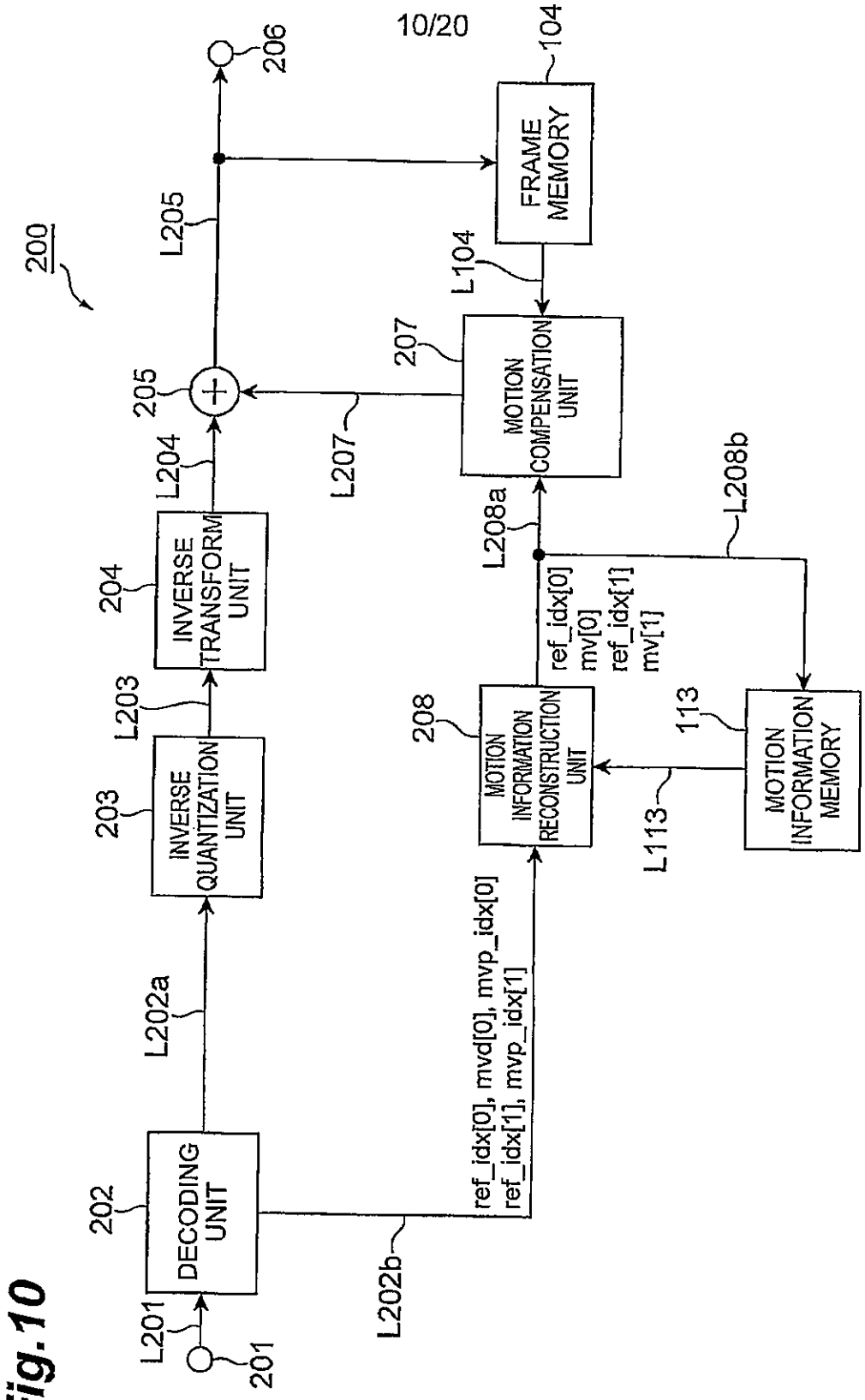
200
201
L201
202
DECODING UNIT
L202a
203
INVERSE QUANTIZATION UNIT
L203
204
INVERSE TRANSFORM UNIT
L204
205
206
L205
FRAME MEMORY
104
L104
207
MOTION COMPENSATION UNIT
L207
L208a
L208b
ref_idx[0]
mv[0]
ref_idx[1]
mv[1]
208
MOTION INFORMATION RECONSTRUCTION UNIT
113
MOTION INFORMATION MEMORY
L113
L202b
ref_idx[0], mvd[0], mvp_idx[0]
ref_idx[1], mvp_idx[1]

Fig.11

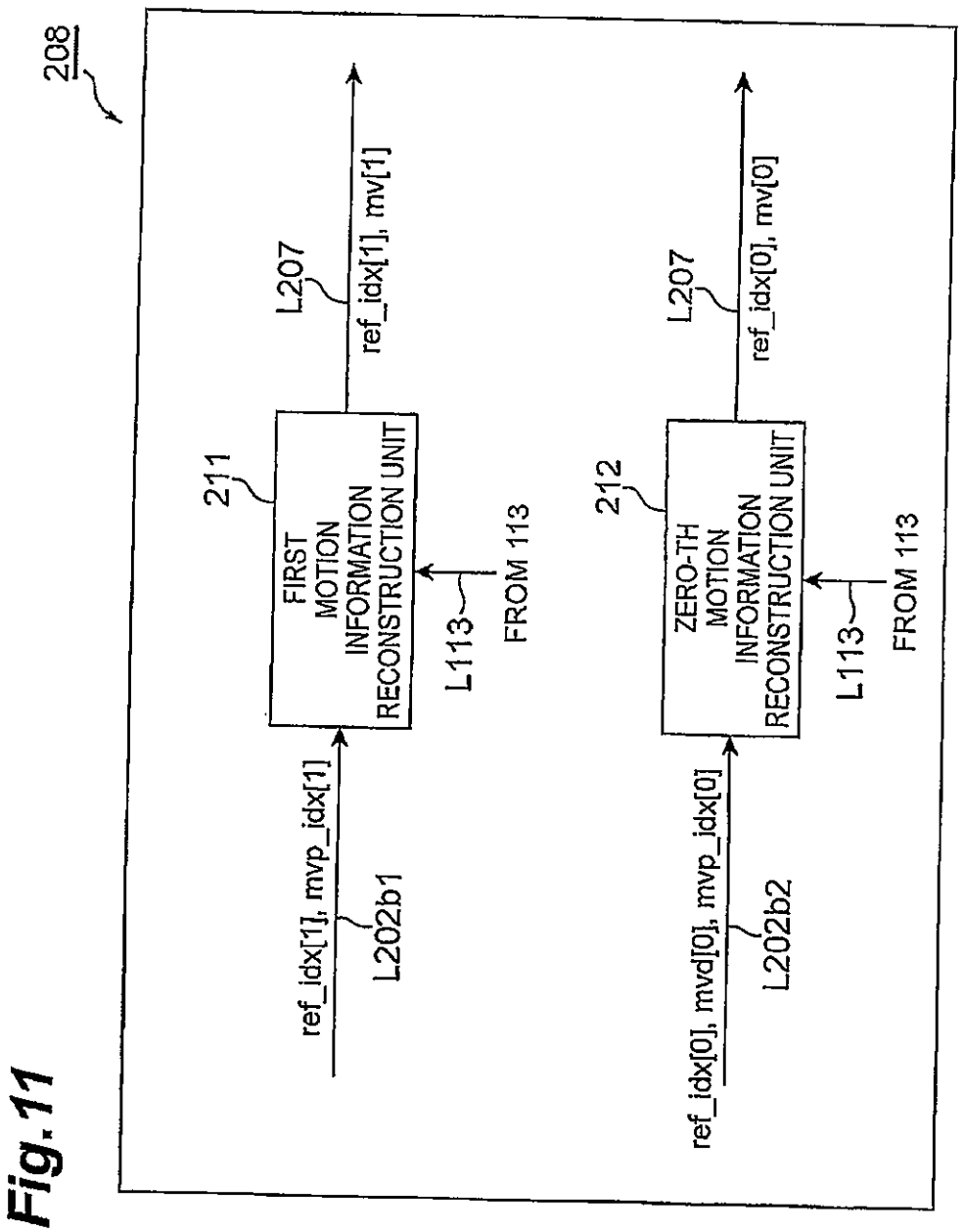
208
211
FIRST MOTION INFORMATION RECONSTRUCTION UNIT
L207
ref_idx[1], mv[1]
ref_idx[1], mvp_idx[1]
L202b1
L113
FROM 113
212
ZERO-TH MOTION INFORMATION RECONSTRUCTION UNIT
L207
ref_idx[0], mv[0]
ref_idx[0], mvd[0], mvp_idx[0]
L202b2
L113
FROM 113

Fig.12

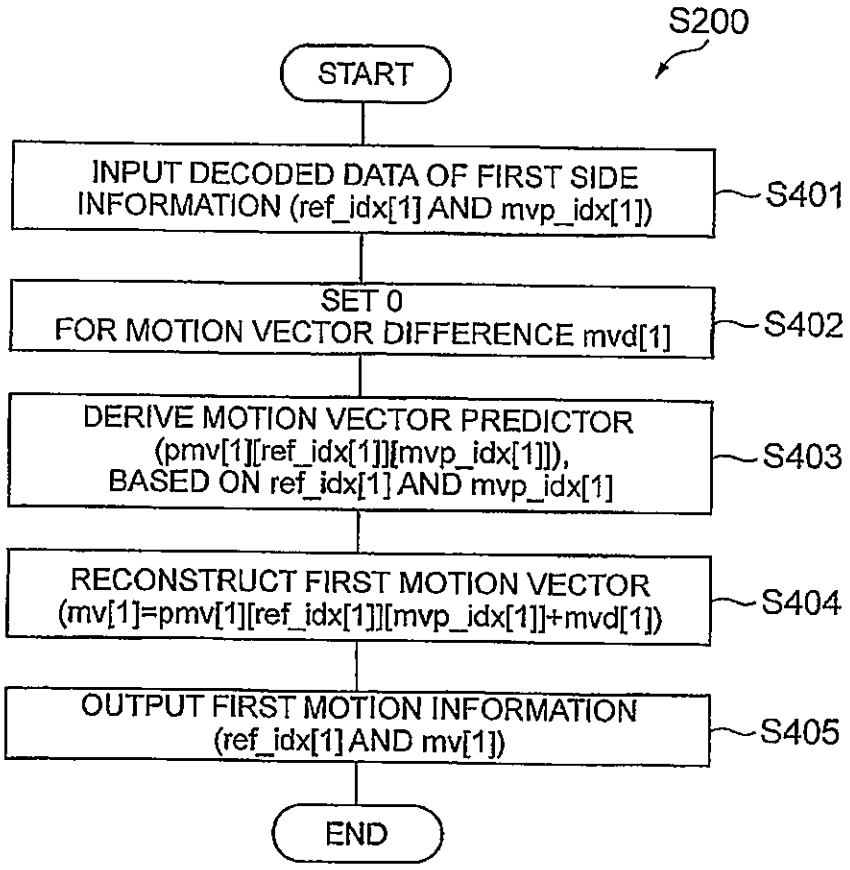
S200
START
INPUT DECODED DATA OF FIRST SIDE INFORMATION (ref_idx[1] AND mvp_idx[1])
S401
SET 0 FOR MOTION VECTOR DIFFERENCE mvd[1]
S402
DERIVE MOTION VECTOR PREDICTOR (pmv[1][ref_idx[1]][mvp_idx[1]]), BASED ON ref_idx[1] AND mvp_idx[1]
S403
RECONSTRUCT FIRST MOTION VECTOR (mv[1]=pmv[1][ref_idx[1]][mvp_idx[1]]+mvd[1])
S404
OUTPUT FIRST MOTION INFORMATION (ref_idx[1] AND mv[1])
S405
END

Fig.13

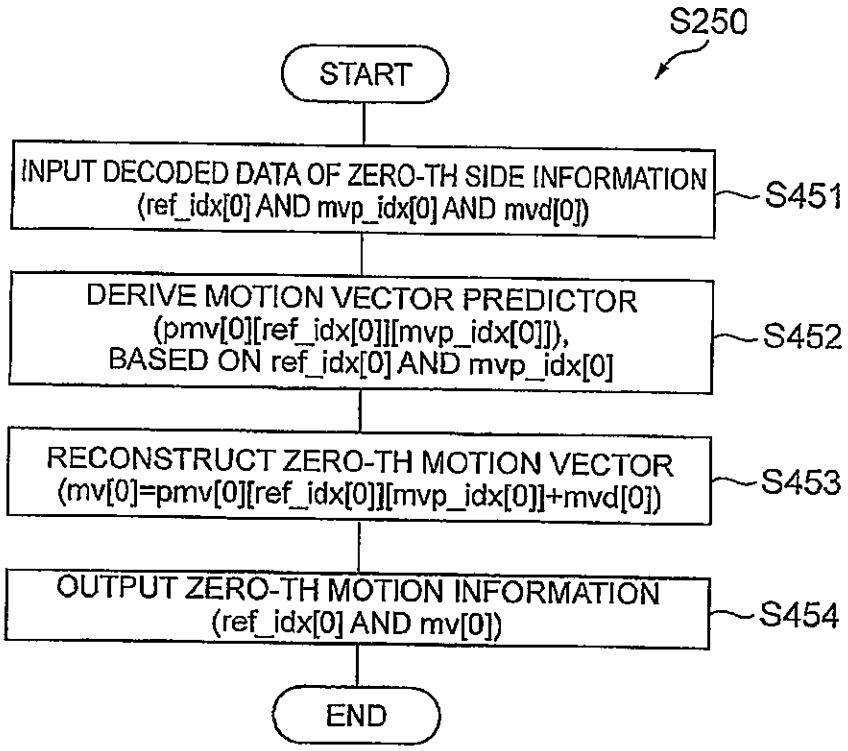
S250
START
INPUT DECODED DATA OF ZERO-TH SIDE INFORMATION (ref_idx[0] AND mvp_idx[0] AND mvd[0])
S451
DERIVE MOTION VECTOR PREDICTOR (pmv[0][ref_idx[0]][mvp_idx[0]]), BASED ON ref_idx[0] AND mvp_idx[0]
S452
RECONSTRUCT ZERO-TH MOTION VECTOR (mv[0]=pmv[0][ref_idx[0]][mvp_idx[0]]+mvd[0])
S453
OUTPUT ZERO-TH MOTION INFORMATION (ref_idx[0] AND mv[0])
S454
END

Fig.14

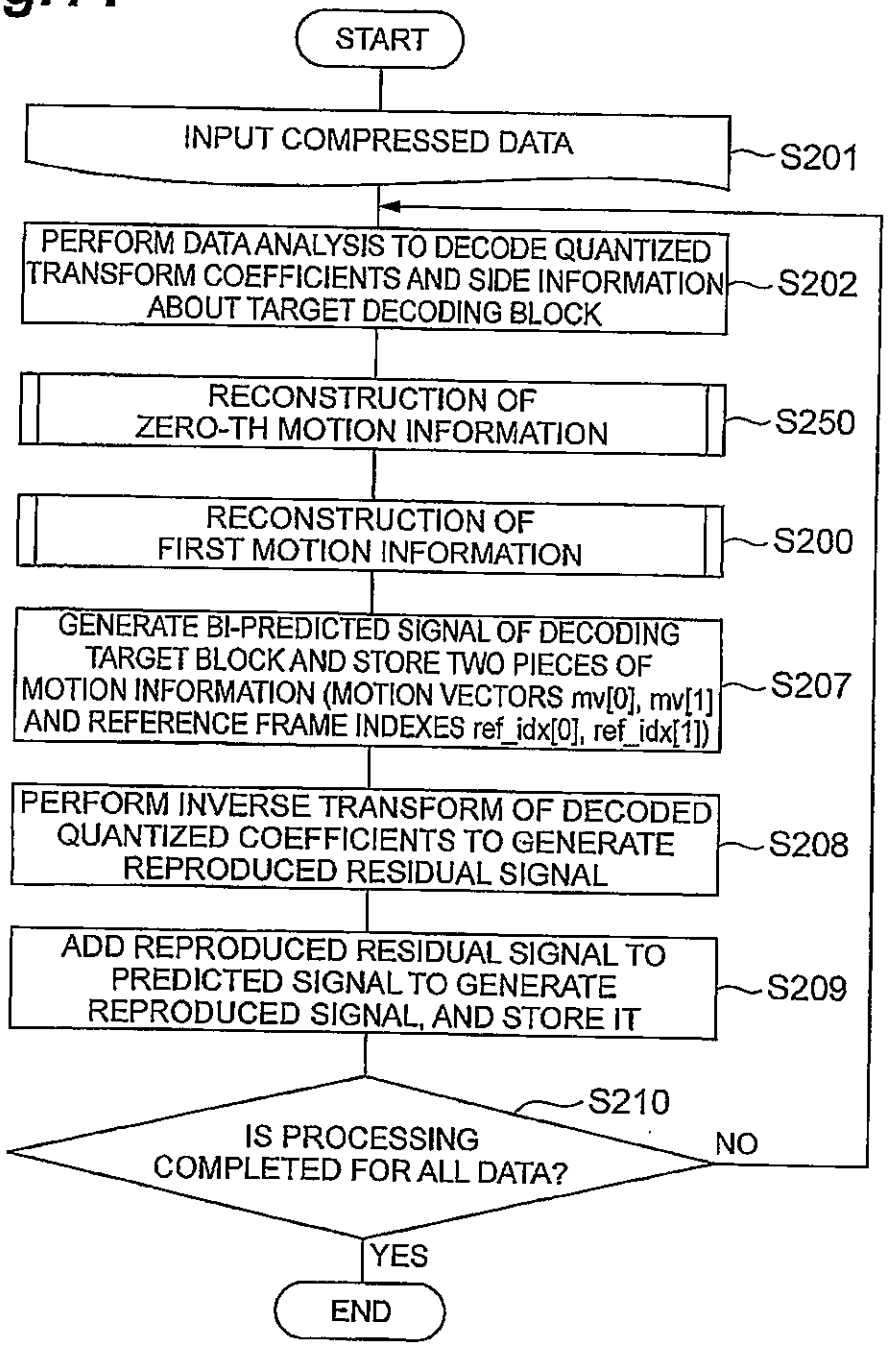
START
INPUT COMPRESSED DATA
S201
PERFORM DATA ANALYSIS TO DECODE QUANTIZED TRANSFORM COEFFICIENTS AND SIDE INFORMATION ABOUT TARGET DECODING BLOCK
S202
RECONSTRUCTION OF ZERO-TH MOTION INFORMATION
S250
RECONSTRUCTION OF FIRST MOTION INFORMATION
S200
GENERATE BI-PREDICTED SIGNAL OF DECODING TARGET BLOCK AND STORE TWO PIECES OF MOTION INFORMATION (MOTION VECTORS mv[0], mv[1] AND REFERENCE FRAME INDEXES ref_idx[0], ref_idx[1])
S207
PERFORM INVERSE TRANSFORM OF DECODED QUANTIZED COEFFICIENTS TO GENERATE REPRODUCED RESIDUAL SIGNAL
S208
ADD REPRODUCED RESIDUAL SIGNAL TO PREDICTED SIGNAL TO GENERATE REPRODUCED SIGNAL, AND STORE IT
S209
S210
IS PROCESSING COMPLETED FOR ALL DATA?
NO
YES
END

Fig.15

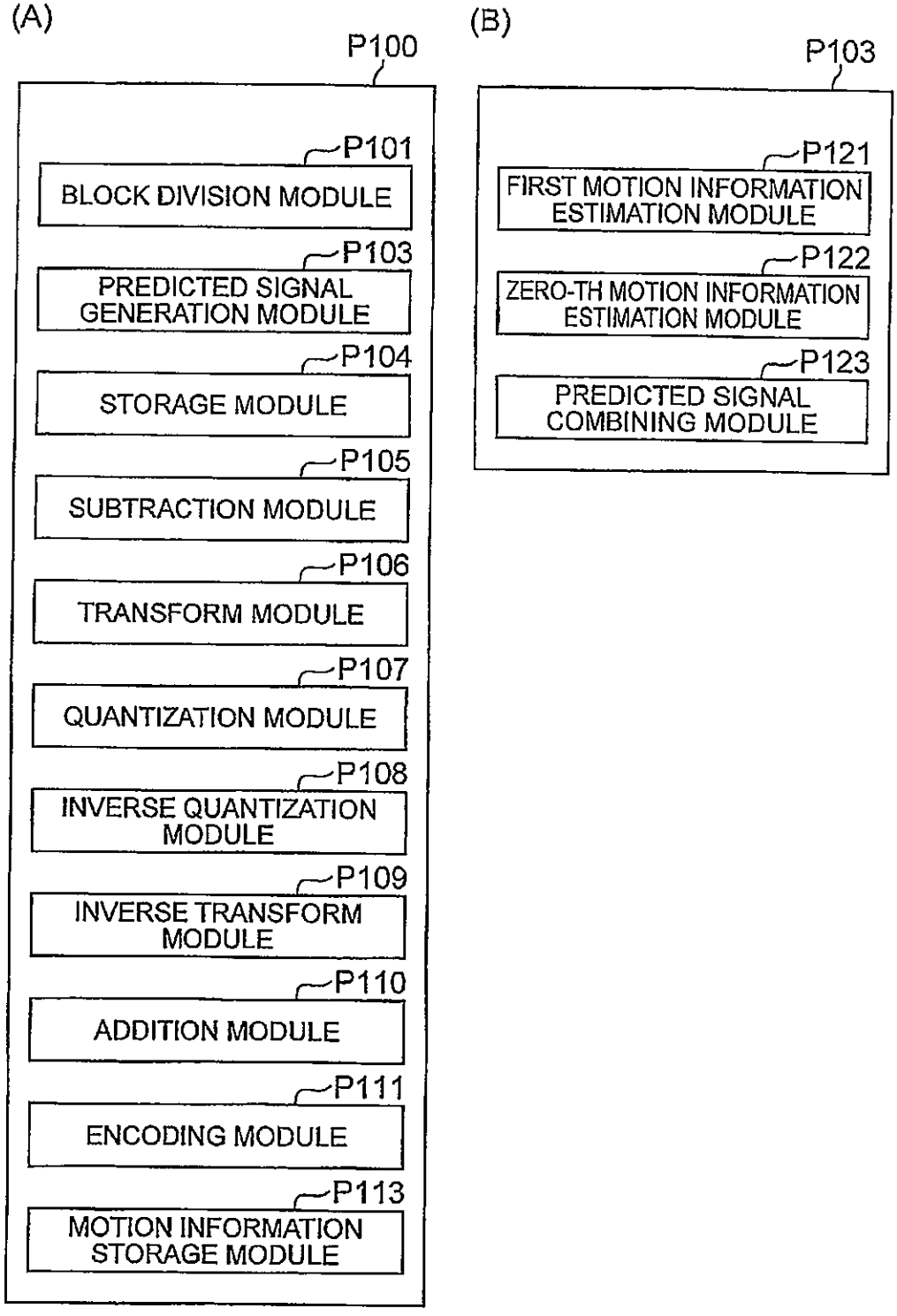
(A)
P100
P101
BLOCK DIVISION MODULE
P103
PREDICTED SIGNAL GENERATION MODULE
P104
STORAGE MODULE
P105
SUBTRACTION MODULE
P106
TRANSFORM MODULE
P107
QUANTIZATION MODULE
P108
INVERSE QUANTIZATION MODULE
P109
INVERSE TRANSFORM MODULE
P110
ADDITION MODULE
P111
ENCODING MODULE
P113
MOTION INFORMATION STORAGE MODULE
(B)
P103
P121
FIRST MOTION INFORMATION ESTIMATION MODULE
P122
ZERO-TH MOTION INFORMATION ESTIMATION MODULE
P123
PREDICTED SIGNAL COMBINING MODULE

Fig.16

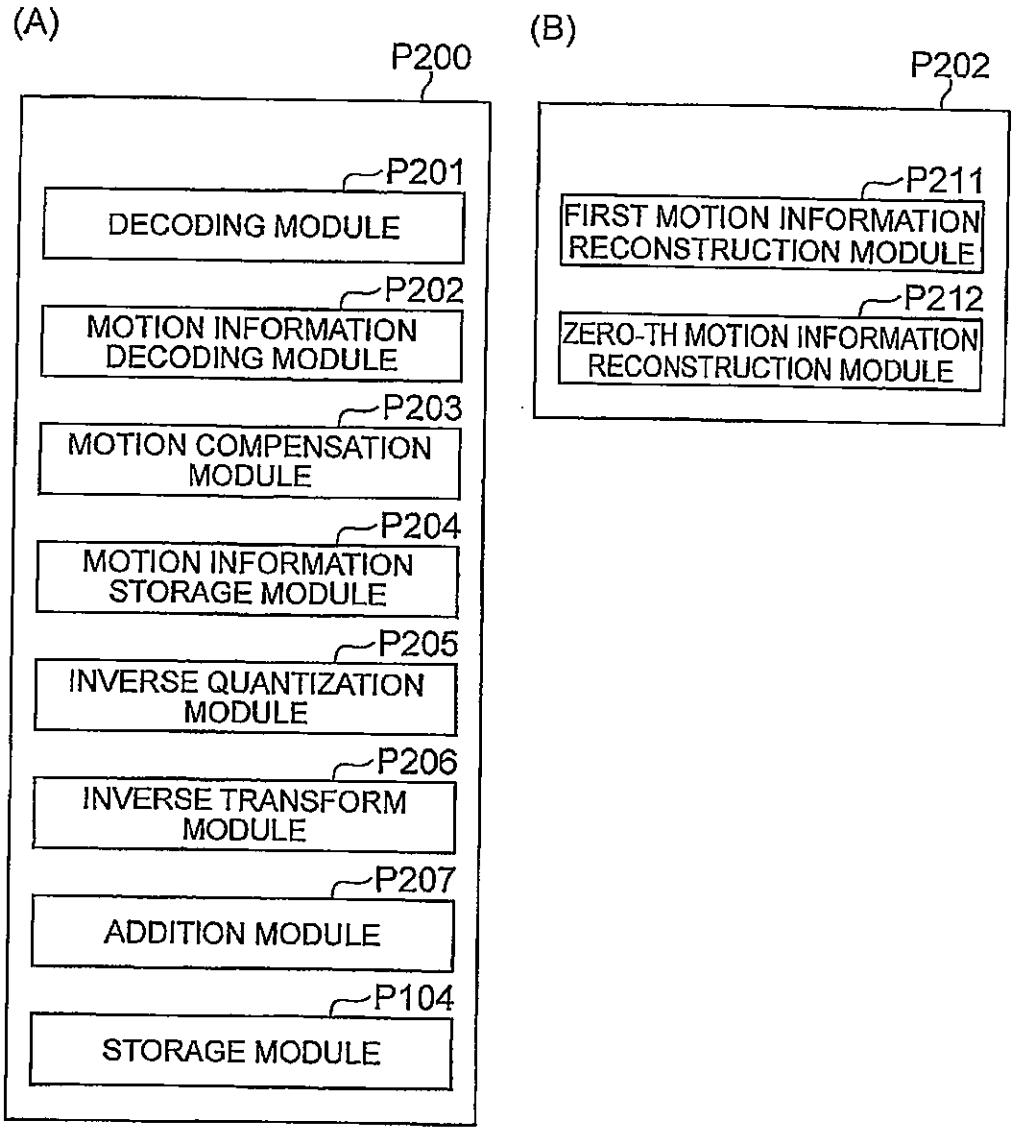
(A)
P200
P201
DECODING MODULE
P202
MOTION INFORMATION DECODING MODULE
P203
MOTION COMPENSATION MODULE
P204
MOTION INFORMATION STORAGE MODULE
P205
INVERSE QUANTIZATION MODULE
P206
INVERSE TRANSFORM MODULE
P207
ADDITION MODULE
P104
STORAGE MODULE
(B)
P202
P211
FIRST MOTION INFORMATION RECONSTRUCTION MODULE
P212
ZERO-TH MOTION INFORMATION RECONSTRUCTION MODULE

Fig.17

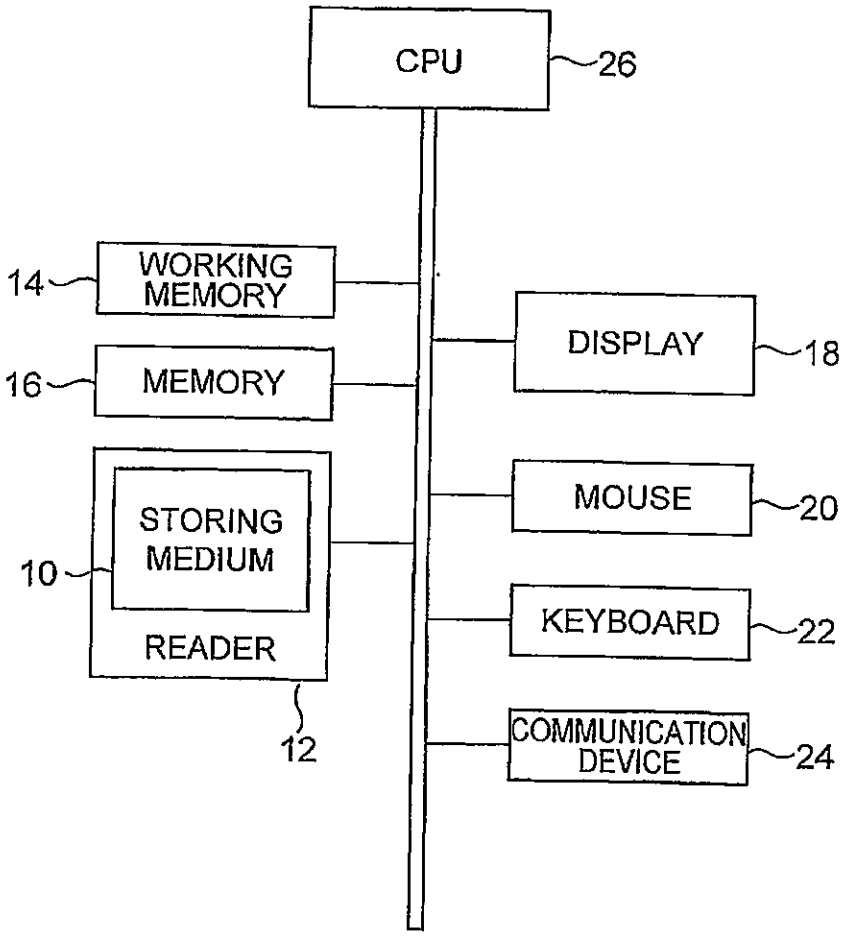
CPU
26
14
WORKING MEMORY
16
MEMORY
10
STORING MEDIUM
READER
12
DISPLAY
18
MOUSE
20
KEYBOARD
22
COMMUNICATION DEVICE
24

Fig.18

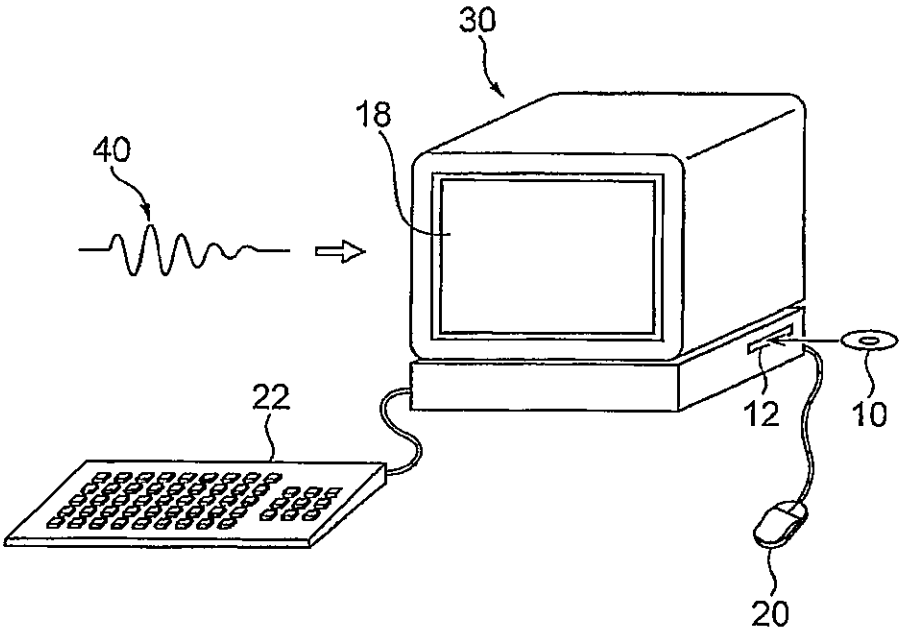

Fig.19

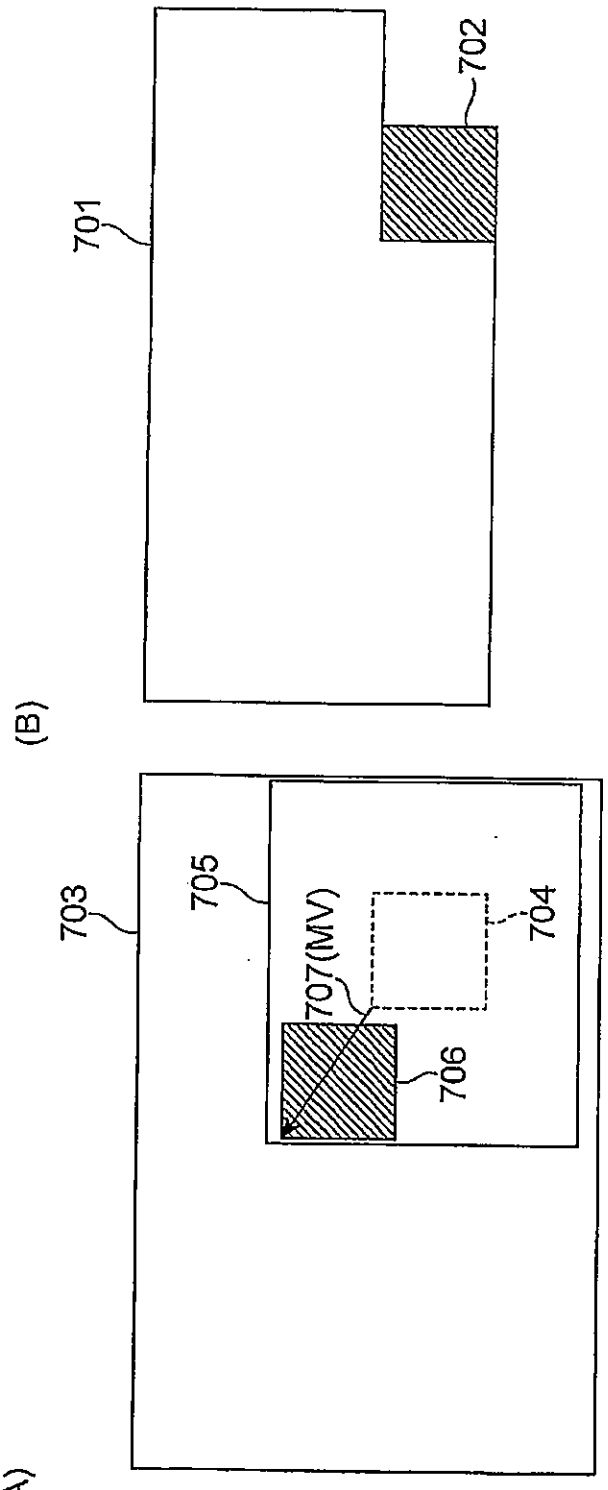

Fig.20

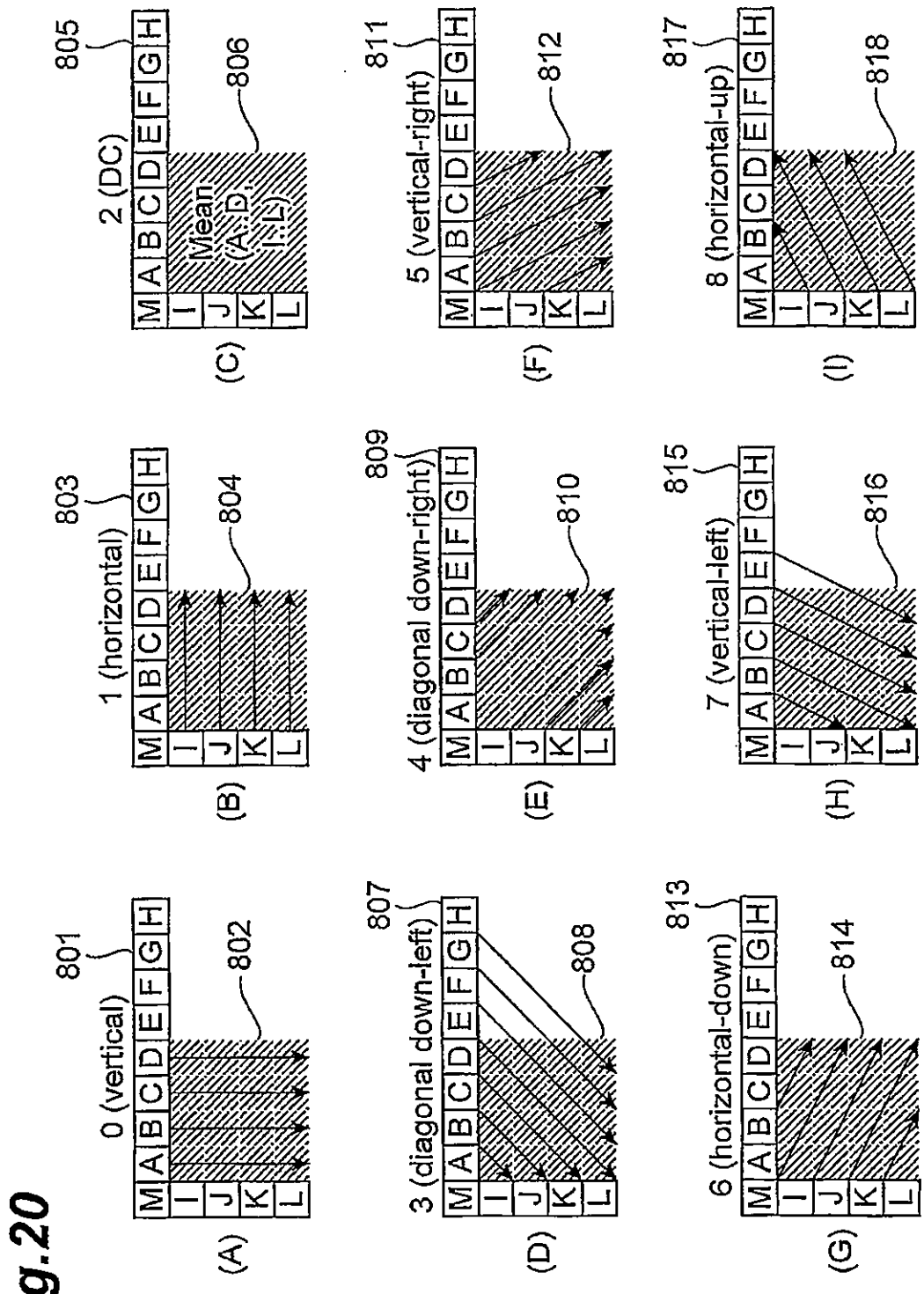
801
0 (vertical)
802
(A)
803
1 (horizontal)
804
(B)
805
2 (DC)
Mean
(A:D;
I:L)
806
(C)
807
3 (diagonal down-left)
808
(D)
809
4 (diagonal down-right)
810
(E)
811
5 (vertical-right)
812
(F)
813
6 (horizontal-down)
814
(G)
815
7 (vertical-left)
816
(H)
817
8 (horizontal-up)
818
(I)
M A B C D E F G H
I J K L