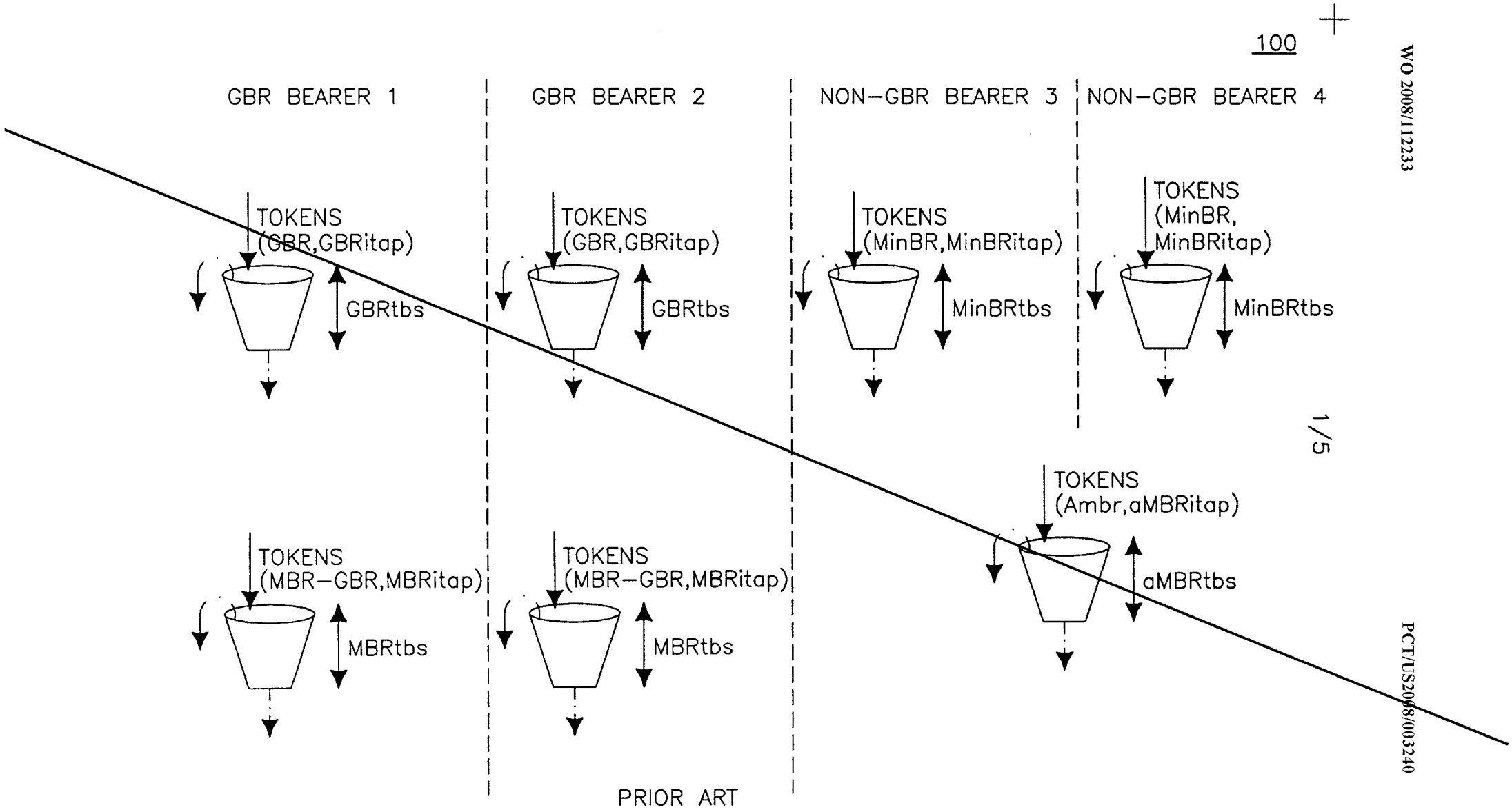

PRIOR ART

FIG.1

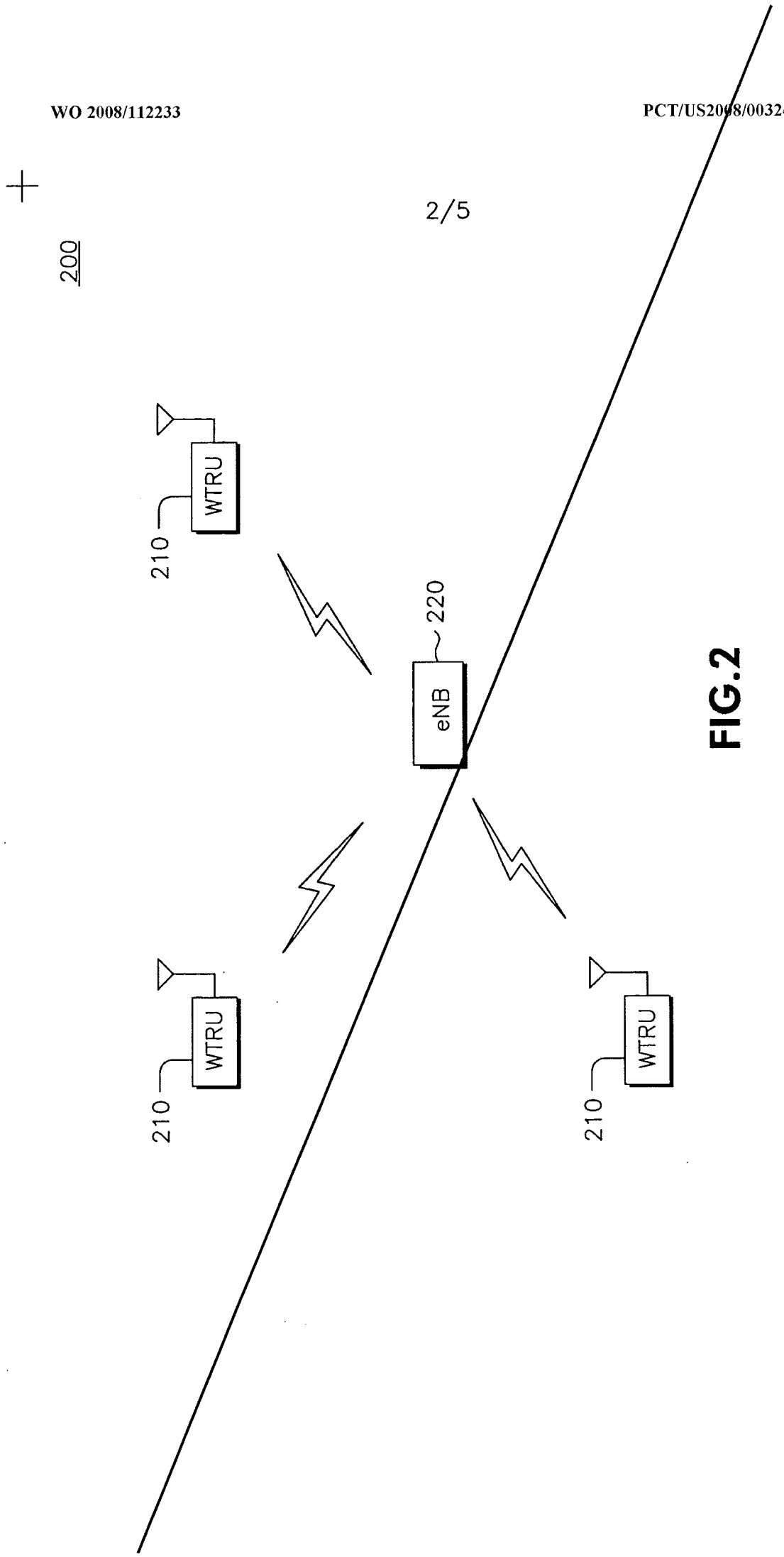

FIG.2

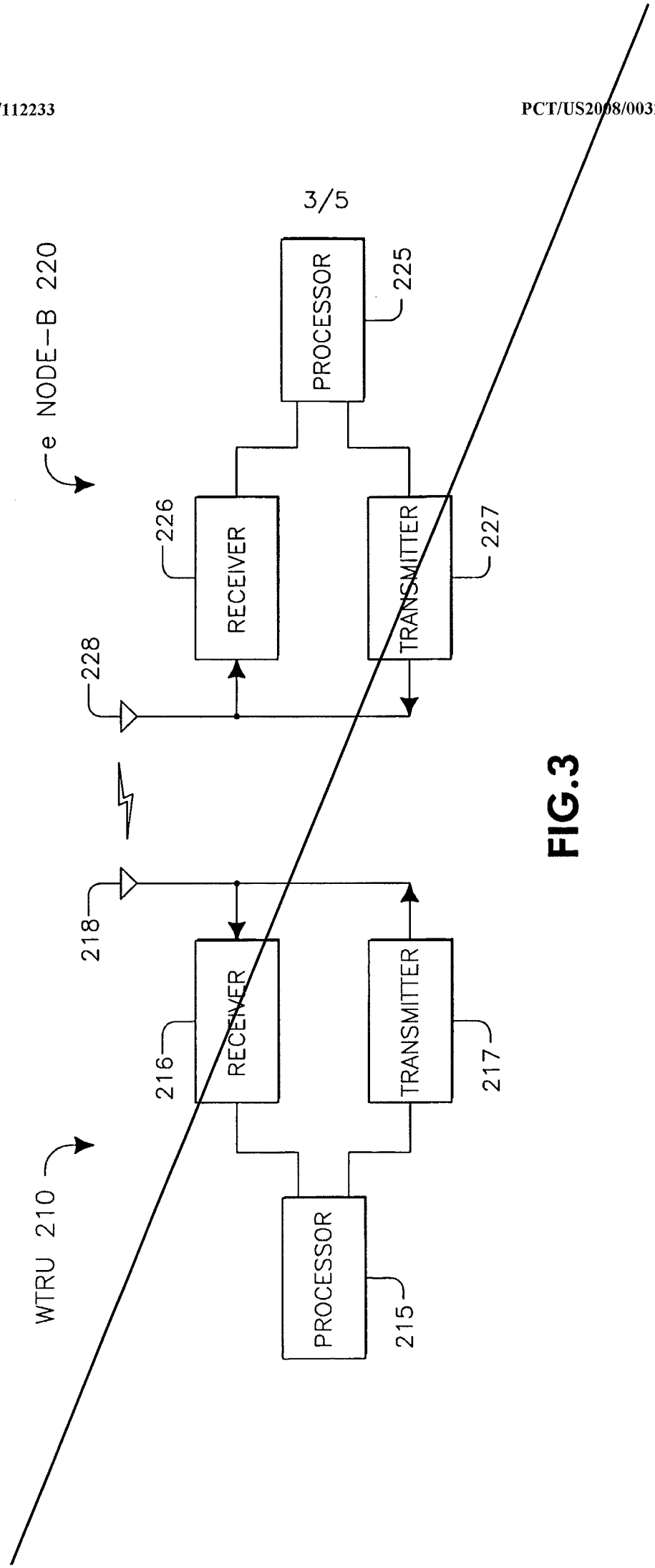
300
e NODE-B 220
PROCESSOR
225
RECEIVER
226
TRANSMITTER
227
228
218
RECEIVER
216
TRANSMITTER
217
WTRU 210
PROCESSOR
215

FIG.3

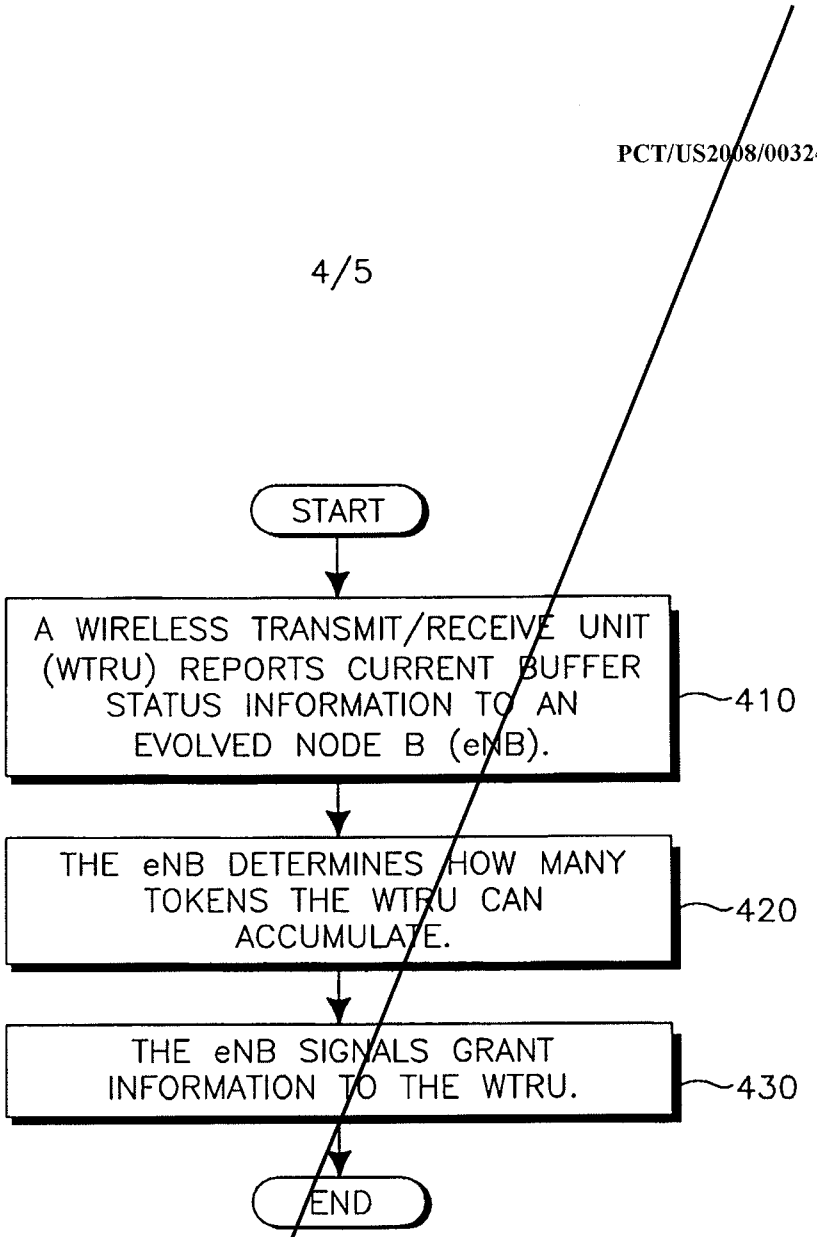
400
START
A WIRELESS TRANSMIT/RECEIVE UNIT (WTRU) REPORTS CURRENT BUFFER STATUS INFORMATION TO AN EVOLVED NODE B (eNB).
410
THE eNB DETERMINES HOW MANY TOKENS THE WTRU CAN ACCUMULATE.
420
THE eNB SIGNALS GRANT INFORMATION TO THE WTRU.
430
END

FIG.4

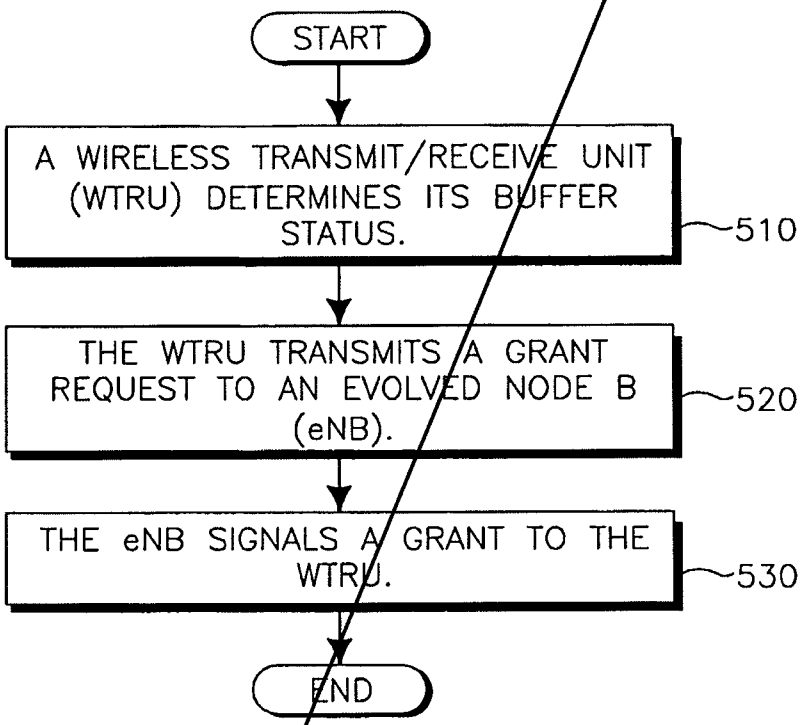
500
START
A WIRELESS TRANSMIT/RECEIVE UNIT (WTRU) DETERMINES ITS BUFFER STATUS.
510
THE WTRU TRANSMITS A GRANT REQUEST TO AN EVOLVED NODE B (eNB).
520
THE eNB SIGNALS A GRANT TO THE WTRU.
530
END

FIG.5

[Figures]
[Fig. 1]

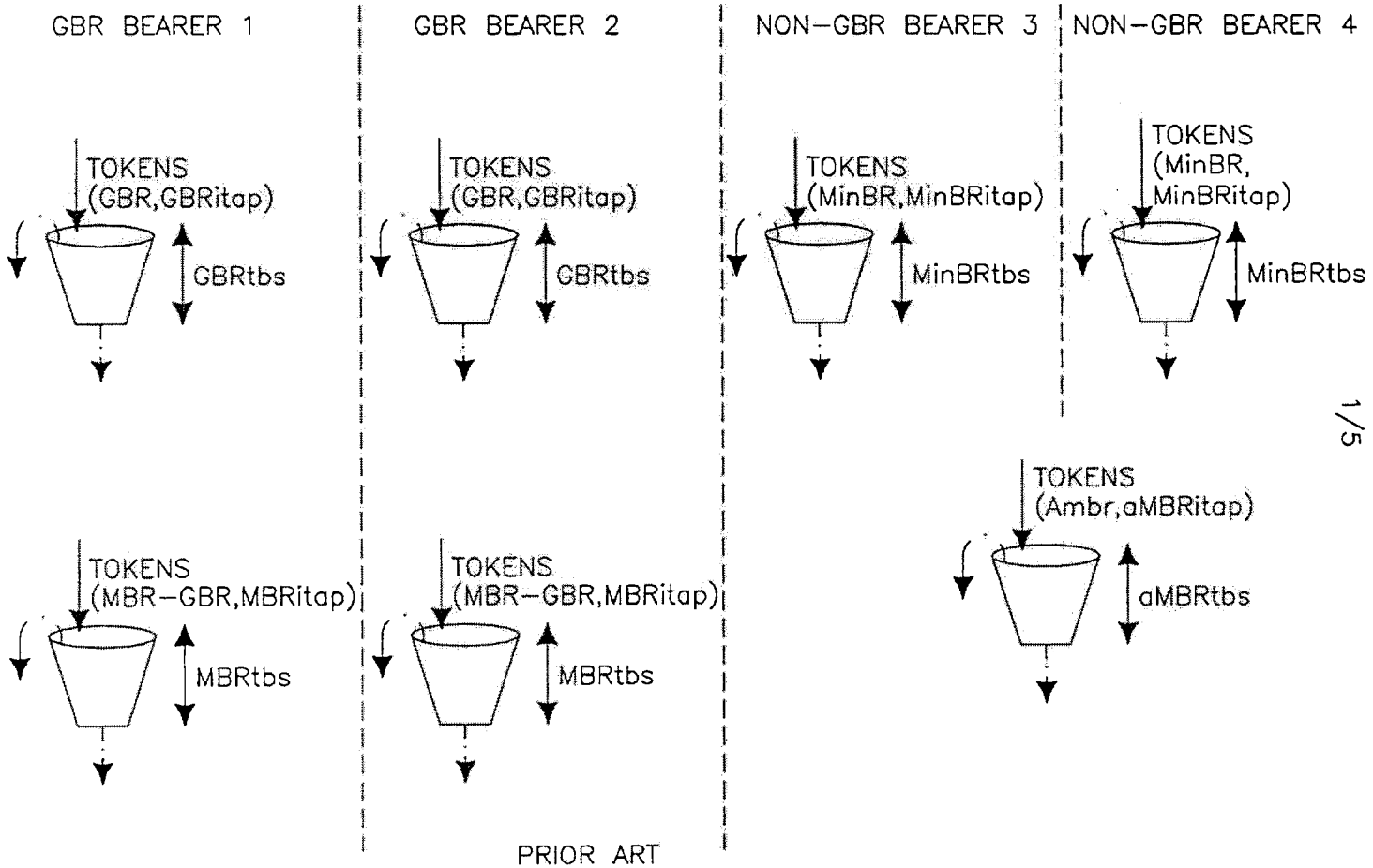

PRIOR ART

FIG.1

[Fig. 2]

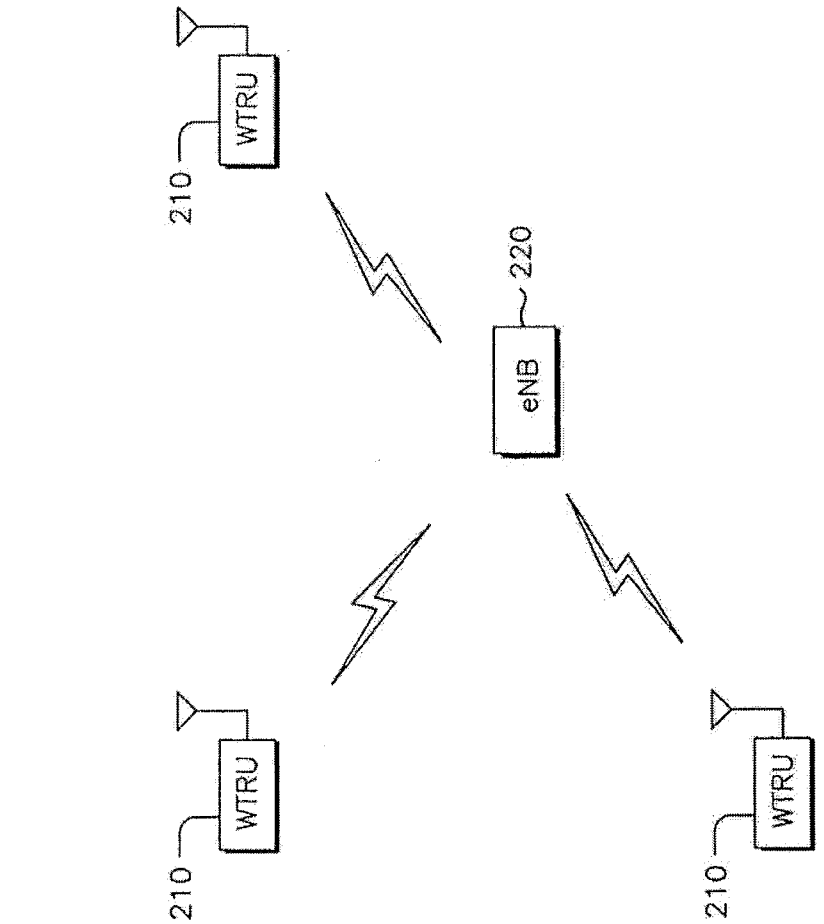

FIG.2

[Fig. 3]

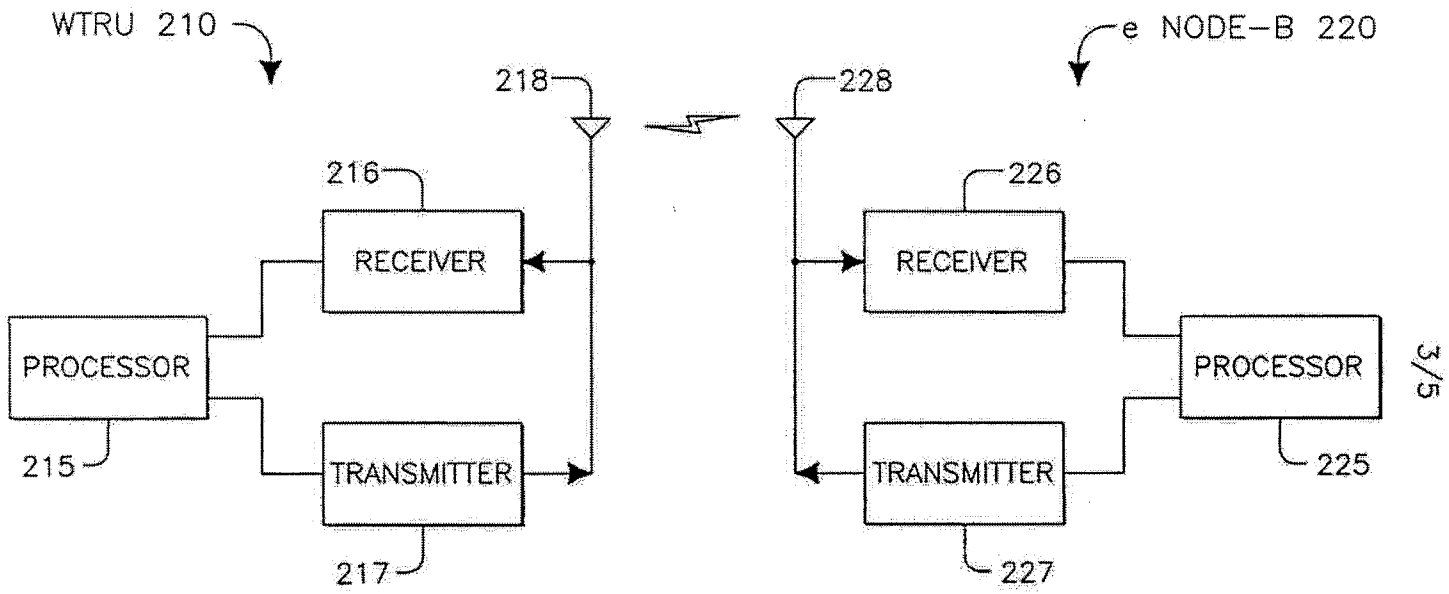
300
WTRU 210
e NODE-B 220
218
228
216
226
RECEIVER
RECEIVER
PROCESSOR
PROCESSOR
215
TRANSMITTER
TRANSMITTER
225
217
227

FIG.3

[Fig. 4]

400

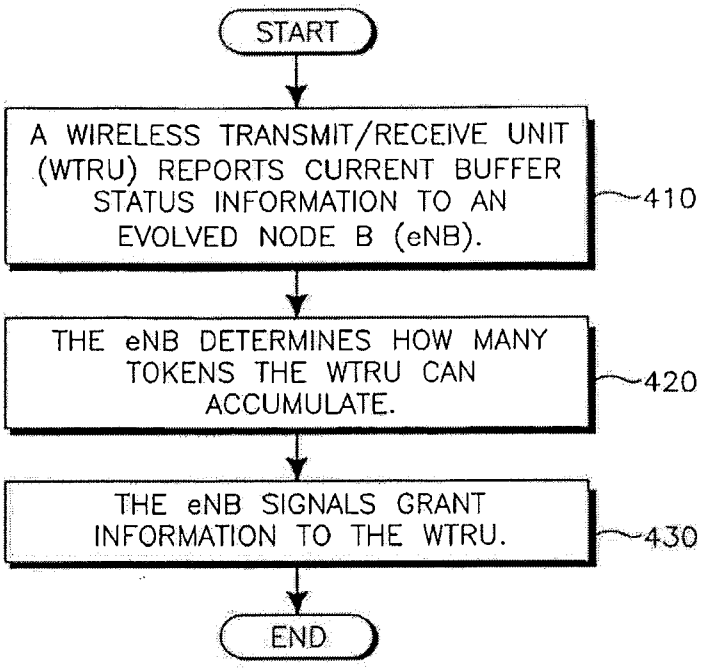

FIG.4

[Fig. 5]

500

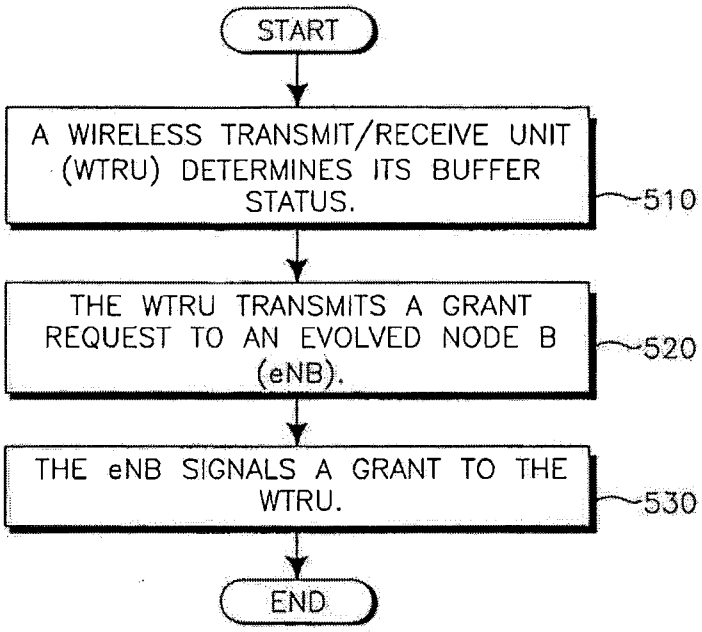
START
A WIRELESS TRANSMIT/RECEIVE UNIT (WTRU) DETERMINES ITS BUFFER STATUS.
510
THE WTRU TRANSMITS A GRANT REQUEST TO AN EVOLVED NODE B (eNB).
520
THE eNB SIGNALS A GRANT TO THE WTRU.
530
END

FIG.5