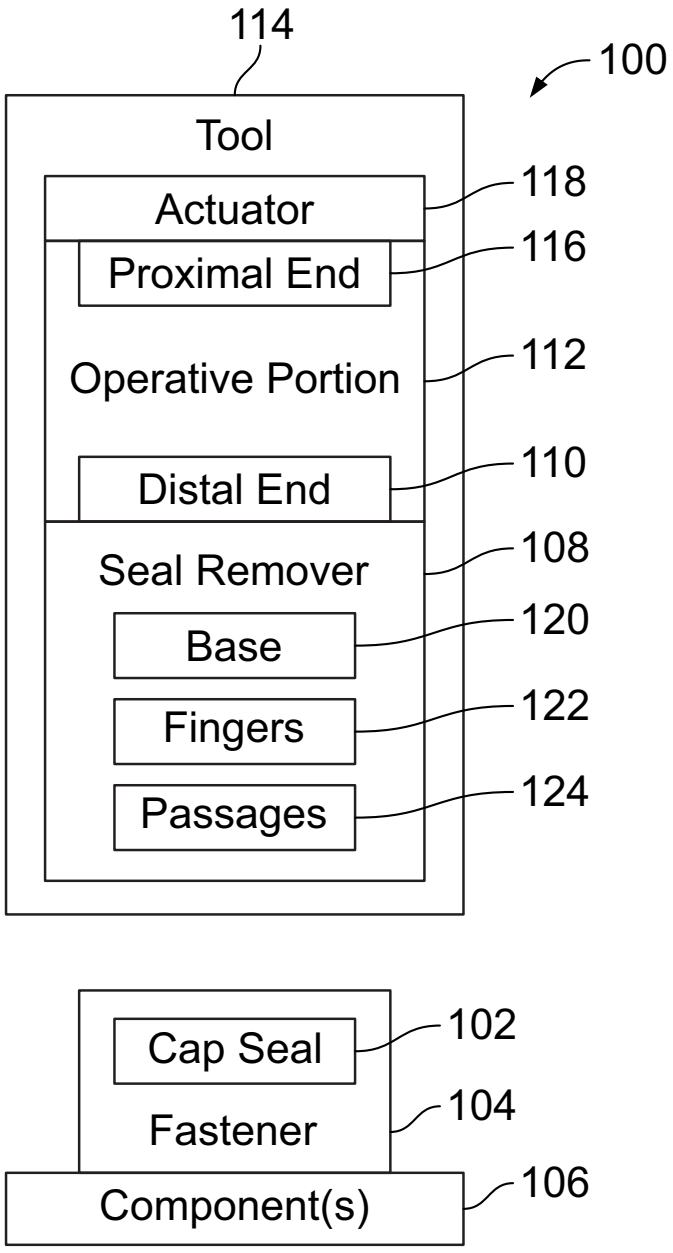
114
100
Tool
Actuator
118
Proximal End
116
Operative Portion
112
Distal End
110
Seal Remover
108
Base
120
Fingers
122
Passages
124
Cap Seal
102
Fastener
104
Component(s)
106

FIG. 1

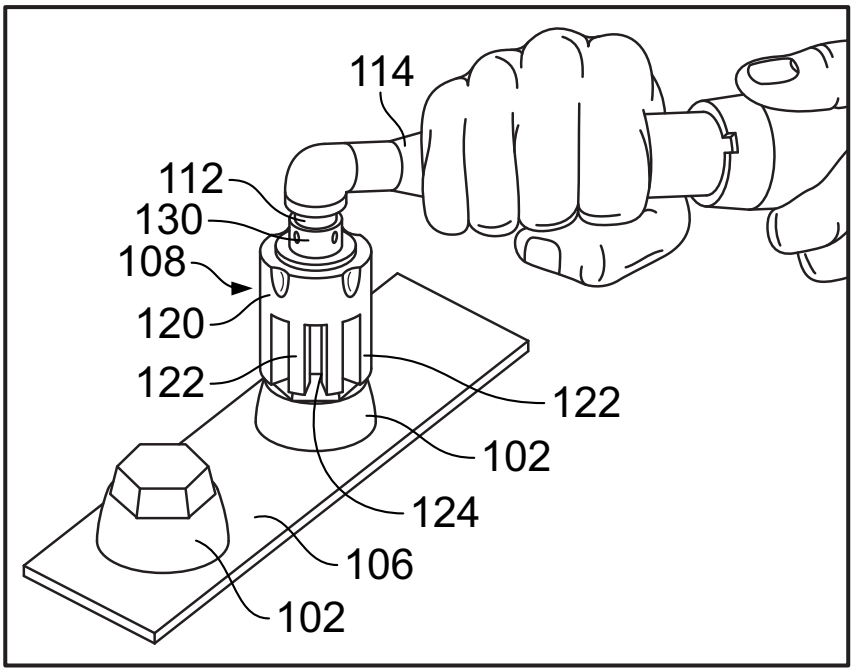
114
112
130
108
120
122
122
102
124
106
102

FIG. 2

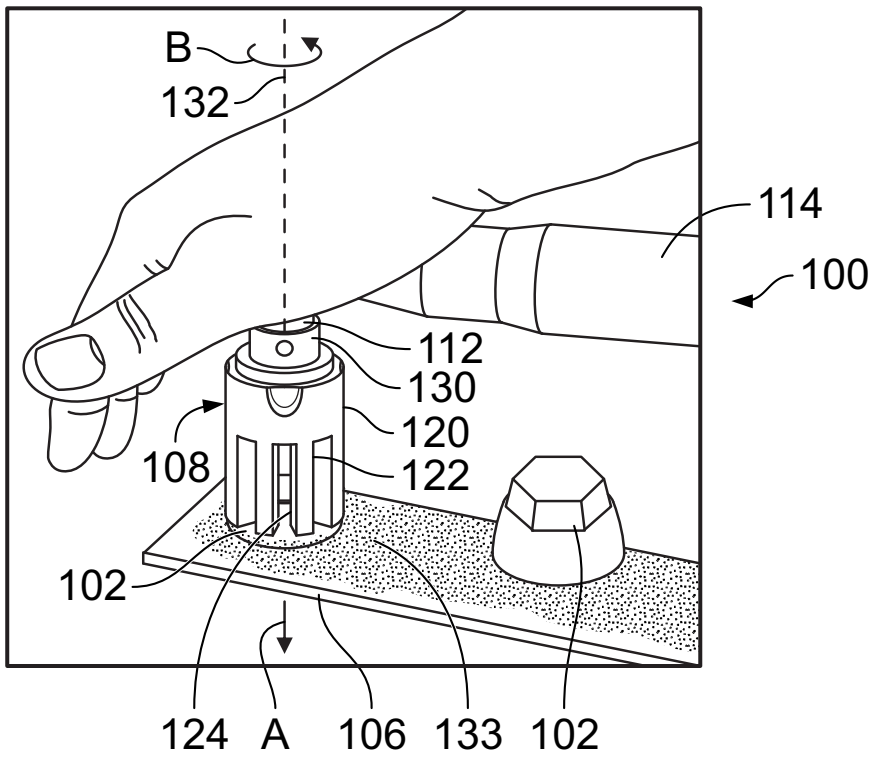
B
132
114
100
112
130
120
108
122
102
124
A
106
133
102

FIG. 3

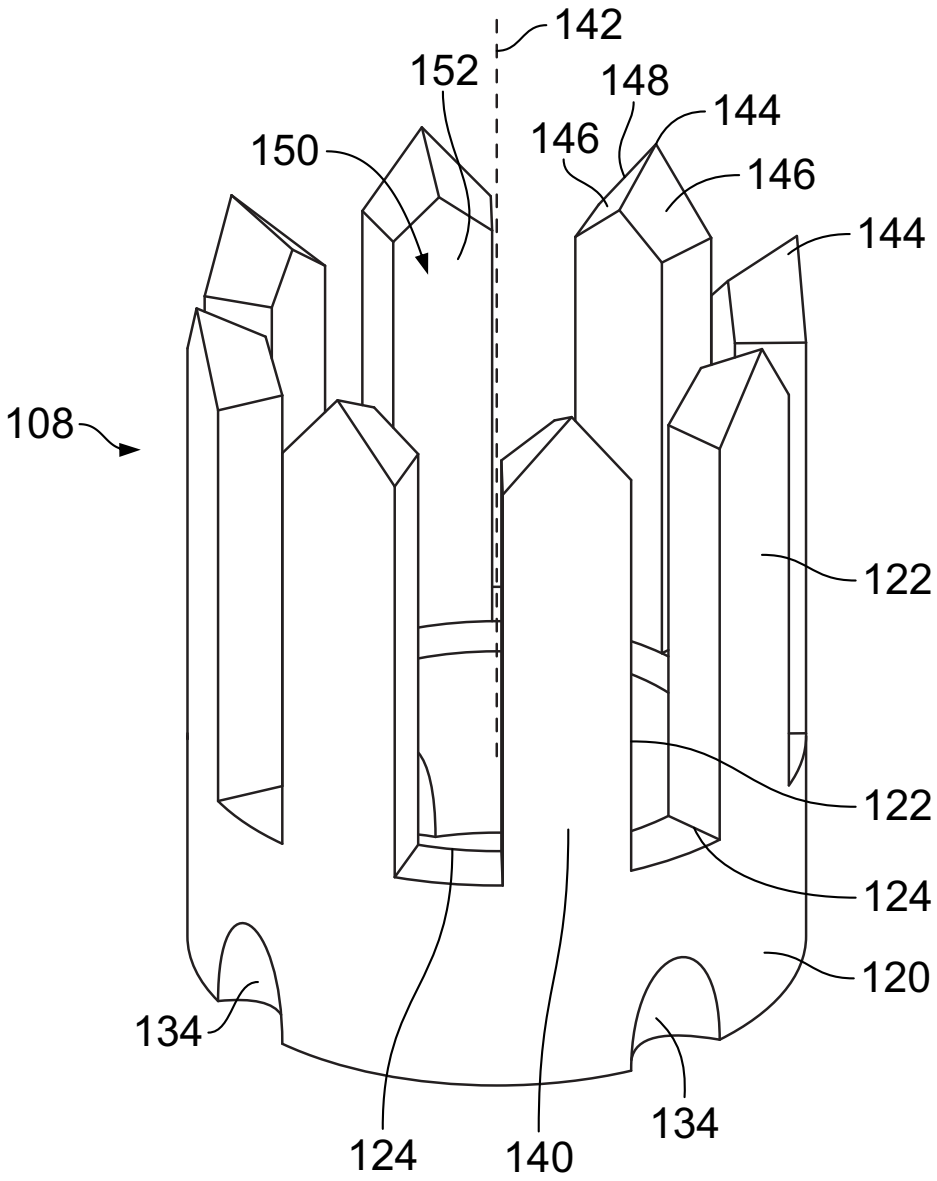
142
152
148
144
150
146
146
144
108
122
122
124
120
134
124
140
134

FIG. 4

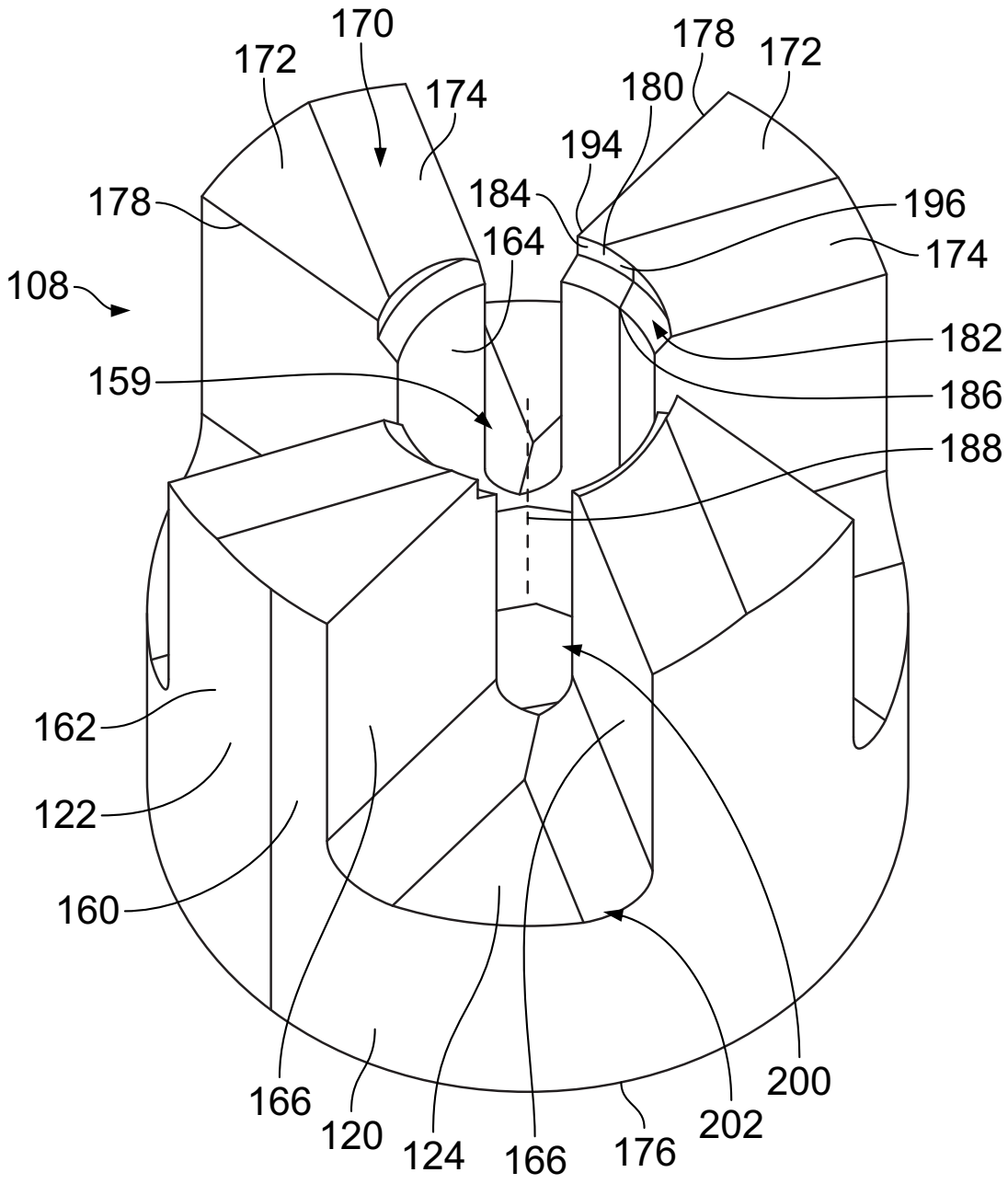
170
172
178
172
174
180
194
178
184
196
164
174
108
182
159
186
188
162
122
160
166
120
124
166
176
202
200

FIG. 5

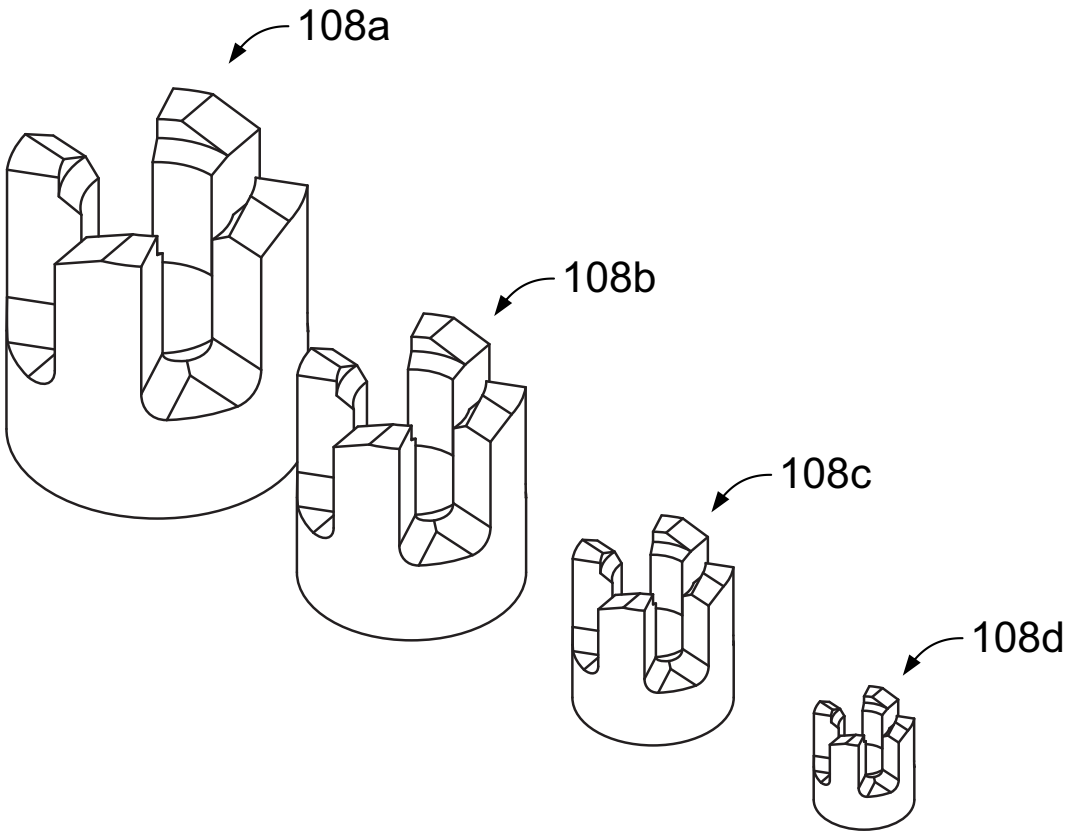

FIG. 6

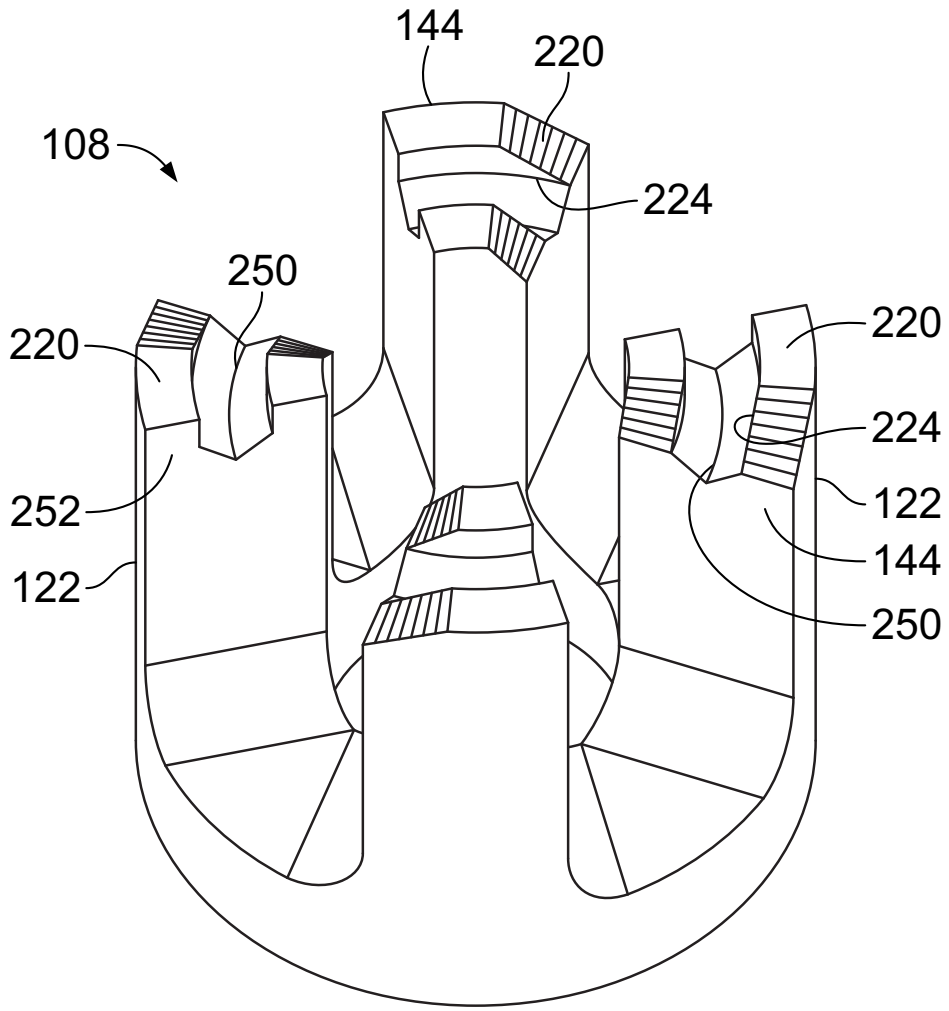

FIG. 7

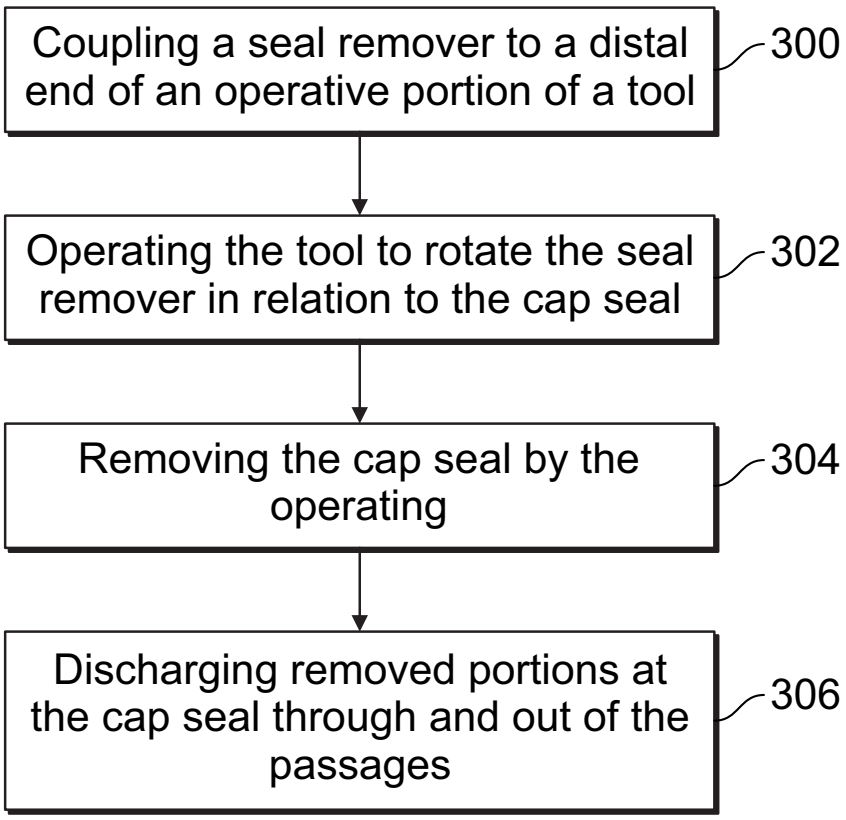
Coupling a seal remover to a distal end of an operative portion of a tool
300
Operating the tool to rotate the seal remover in relation to the cap seal
302
Removing the cap seal by the operating
304
Discharging removed portions at the cap seal through and out of the passages
306

FIG. 8