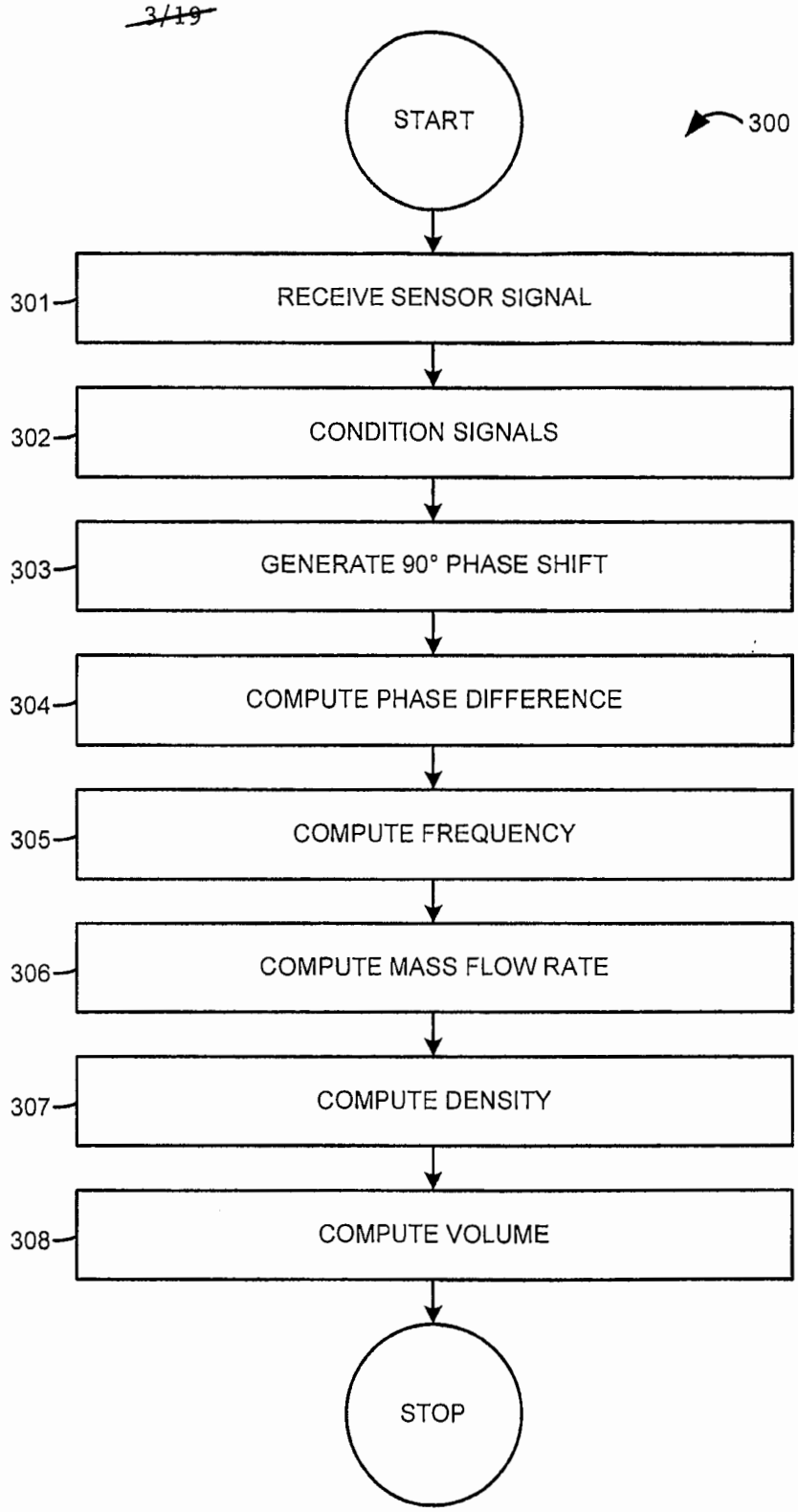
START
300
301
RECEIVE SENSOR SIGNAL
302
CONDITION SIGNALS
303
GENERATE 90° PHASE SHIFT
304
COMPUTE PHASE DIFFERENCE
305
COMPUTE FREQUENCY
306
COMPUTE MASS FLOW RATE
307
COMPUTE DENSITY
308
COMPUTE VOLUME
STOP

FIG. 3

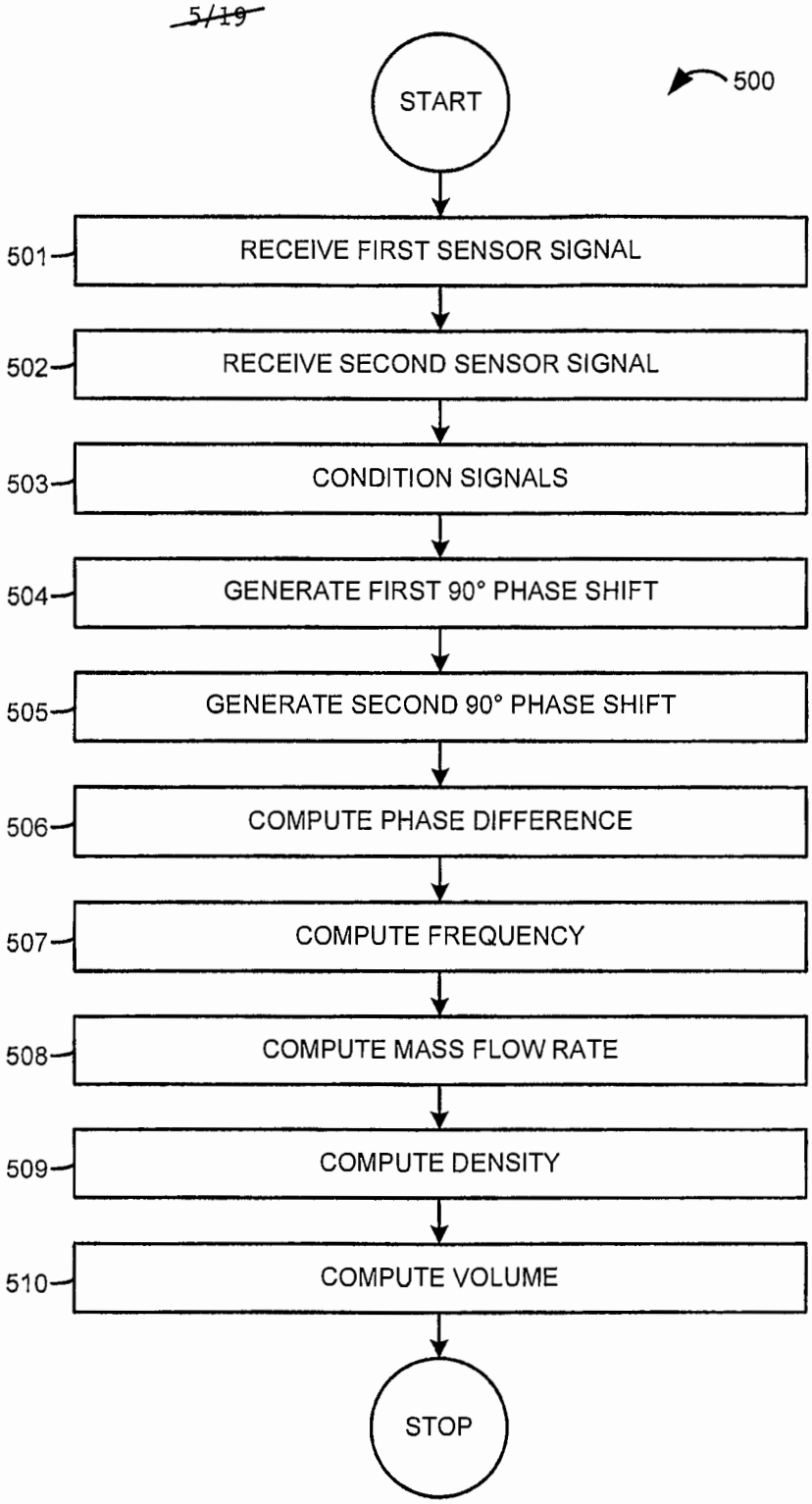
START
500
501
RECEIVE FIRST SENSOR SIGNAL
502
RECEIVE SECOND SENSOR SIGNAL
503
CONDITION SIGNALS
504
GENERATE FIRST 90° PHASE SHIFT
505
GENERATE SECOND 90° PHASE SHIFT
506
COMPUTE PHASE DIFFERENCE
507
COMPUTE FREQUENCY
508
COMPUTE MASS FLOW RATE
509
COMPUTE DENSITY
510
COMPUTE VOLUME
STOP

FIG. 5

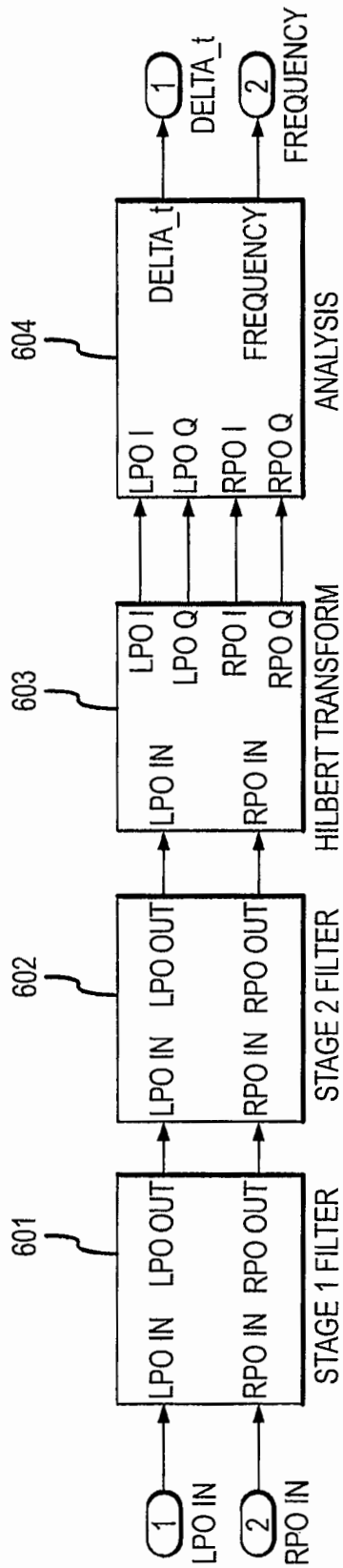
1
LPO IN
2
RPO IN
601
LPO IN
RPO IN
LPO OUT
RPO OUT
STAGE 1 FILTER
602
LPO IN
RPO IN
LPO OUT
RPO OUT
STAGE 2 FILTER
603
LPO IN
RPO IN
LPO I
LPO Q
RPO I
RPO Q
HILBERT TRANSFORM
604
LPO I
LPO Q
RPO I
RPO Q
DELTA_t
FREQUENCY
ANALYSIS
1
DELTA_t
2
FREQUENCY

FIG. 6

600

~~11/19~~

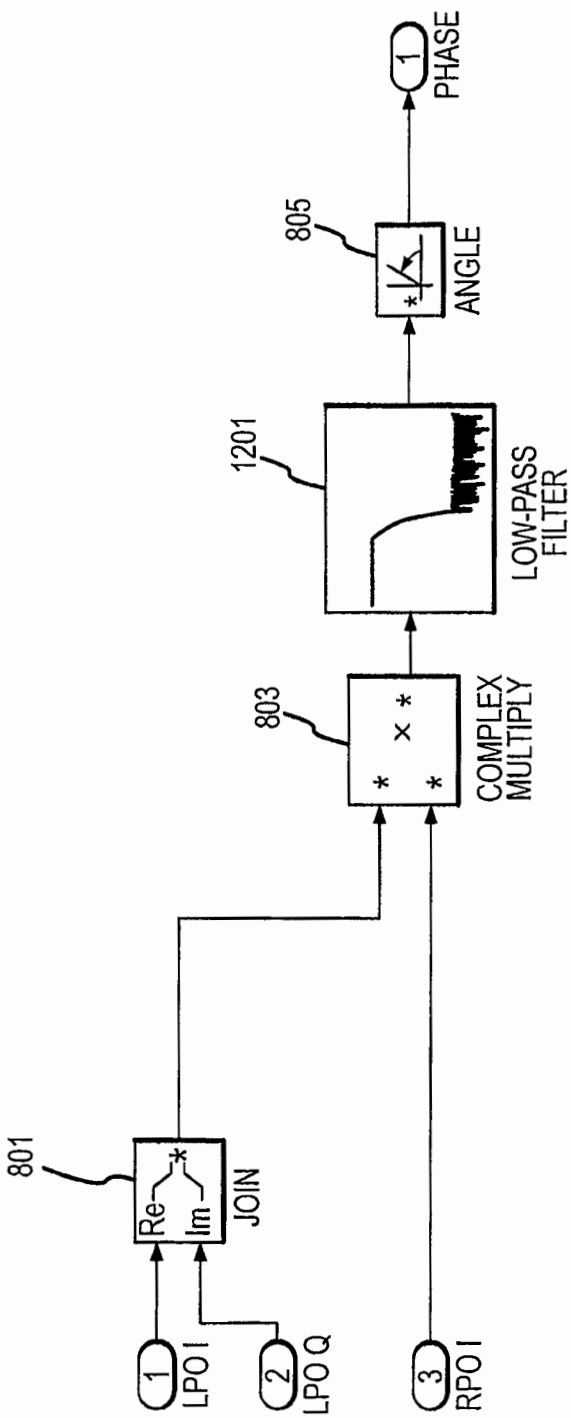
801
Re
Im
JOIN
1
LPO I
2
LPO Q
3
RPO I
803
COMPLEX MULTIPLY
1201
LOW-PASS FILTER
805
ANGLE
1
PHASE
604a'

FIG. 12

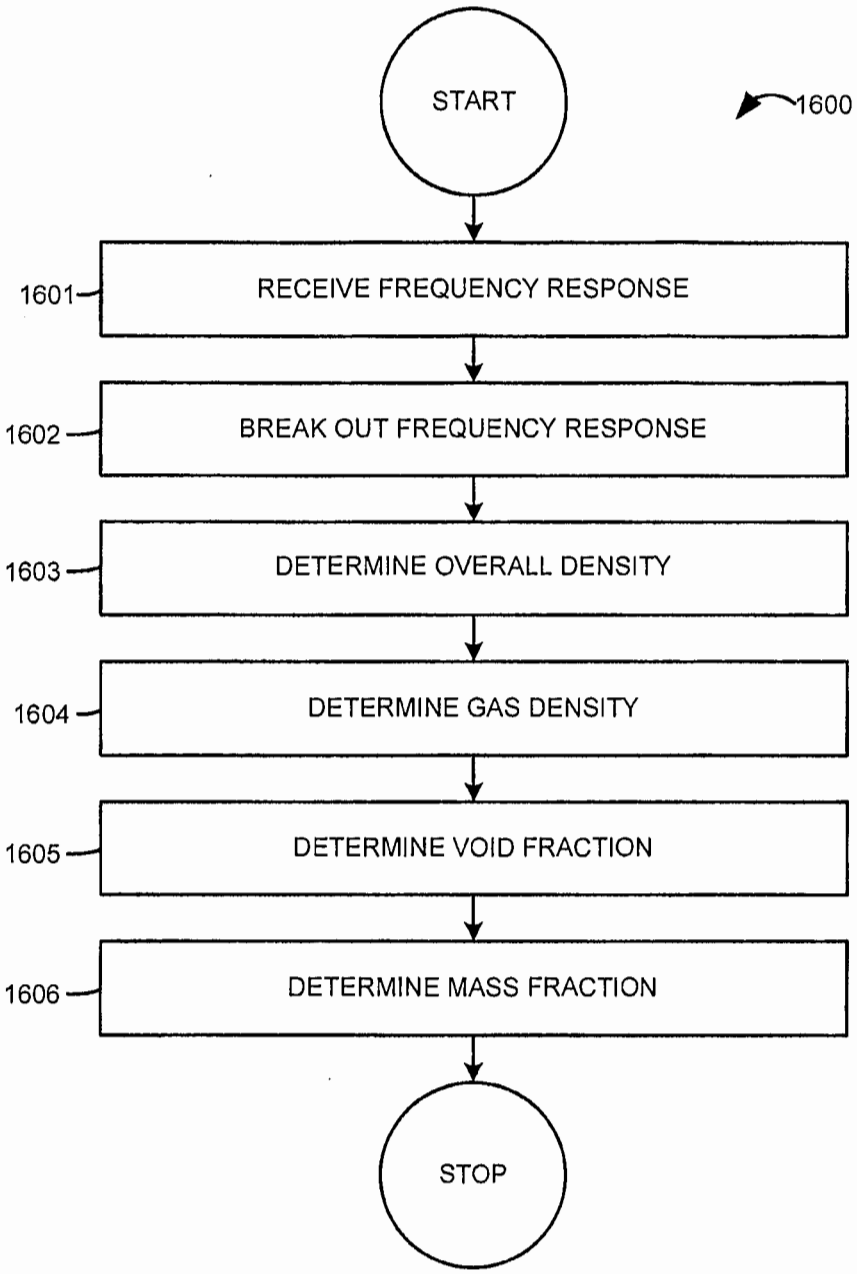
START
1600
1601
RECEIVE FREQUENCY RESPONSE
1602
BREAK OUT FREQUENCY RESPONSE
1603
DETERMINE OVERALL DENSITY
1604
DETERMINE GAS DENSITY
1605
DETERMINE VOID FRACTION
1606
DETERMINE MASS FRACTION
STOP

FIG. 16

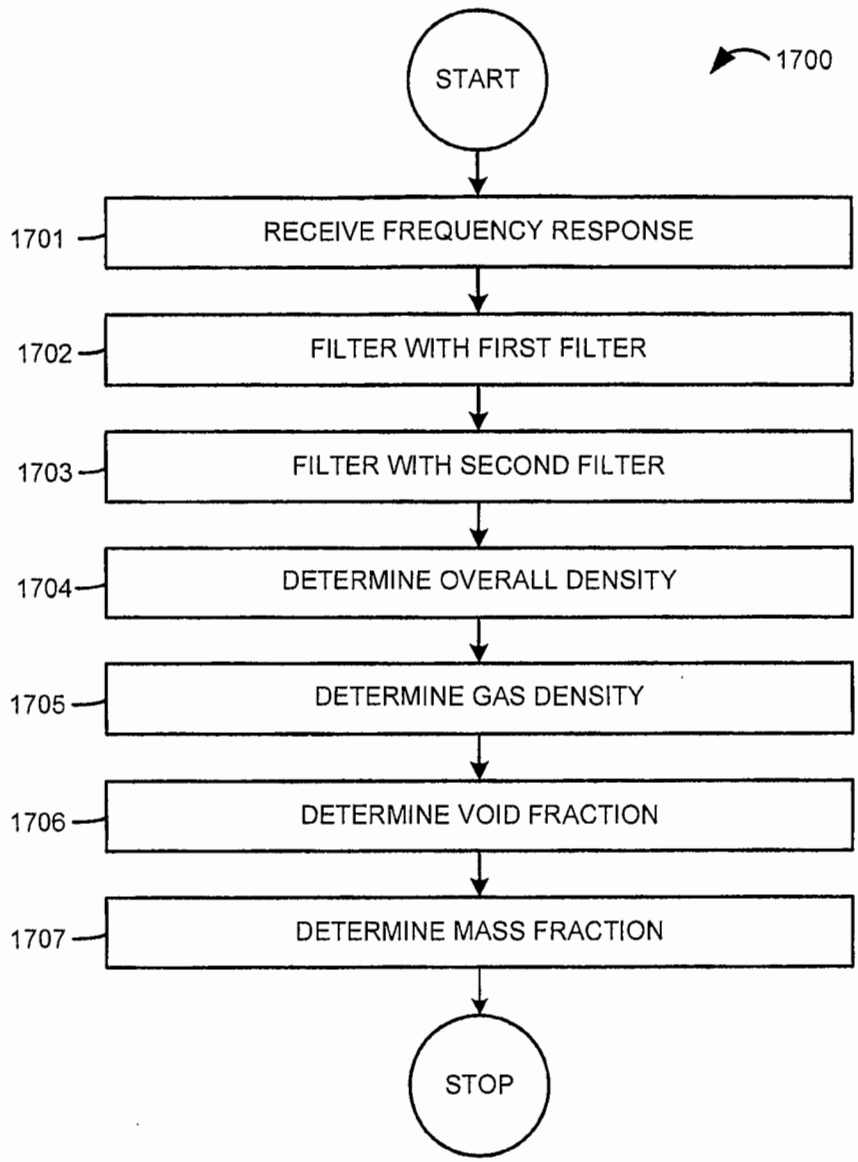
START
1700
1701
RECEIVE FREQUENCY RESPONSE
1702
FILTER WITH FIRST FILTER
1703
FILTER WITH SECOND FILTER
1704
DETERMINE OVERALL DENSITY
1705
DETERMINE GAS DENSITY
1706
DETERMINE VOID FRACTION
1707
DETERMINE MASS FRACTION
STOP

FIG. 17

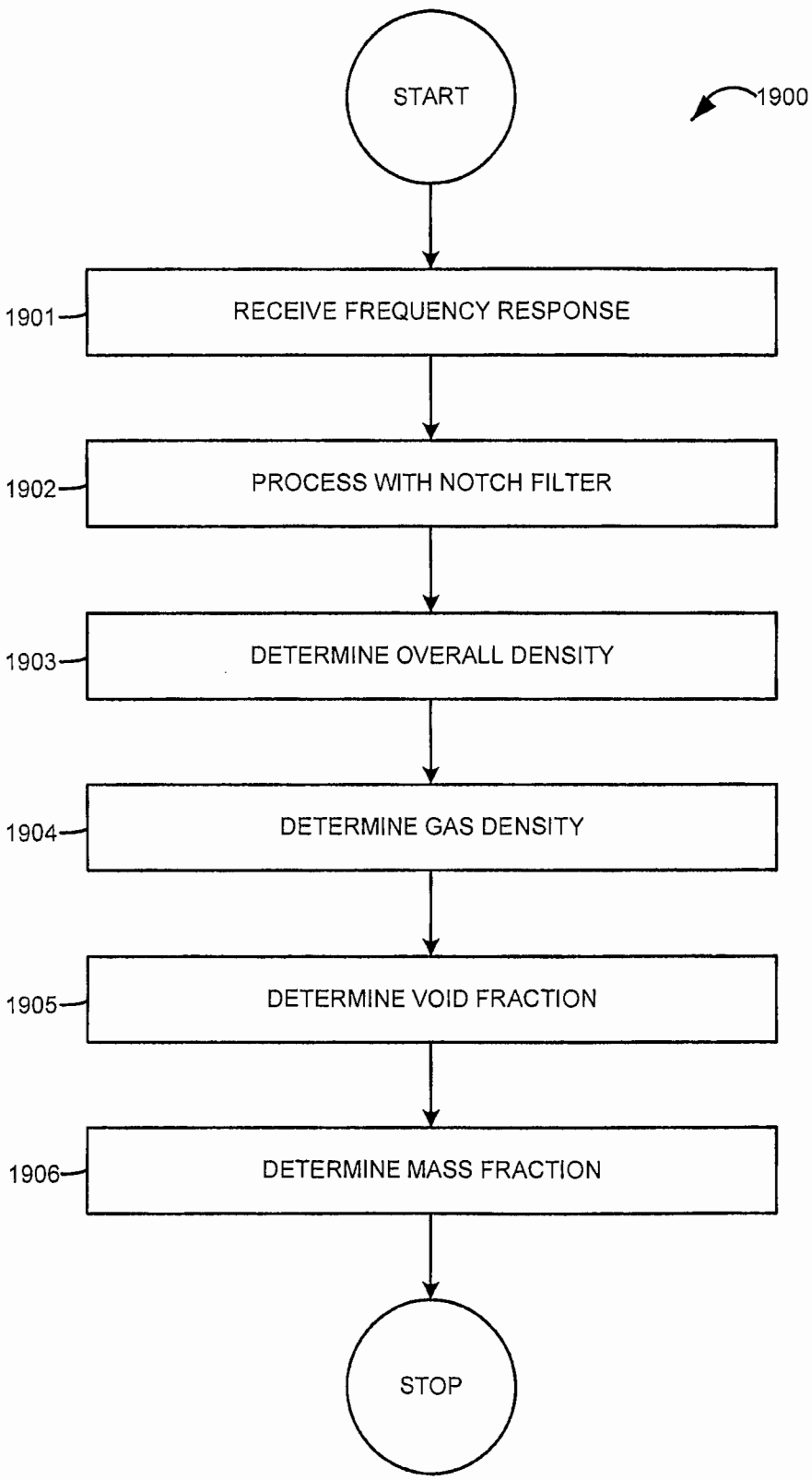
START
1900
1901
RECEIVE FREQUENCY RESPONSE
1902
PROCESS WITH NOTCH FILTER
1903
DETERMINE OVERALL DENSITY
1904
DETERMINE GAS DENSITY
1905
DETERMINE VOID FRACTION
1906
DETERMINE MASS FRACTION
STOP

FIG. 19

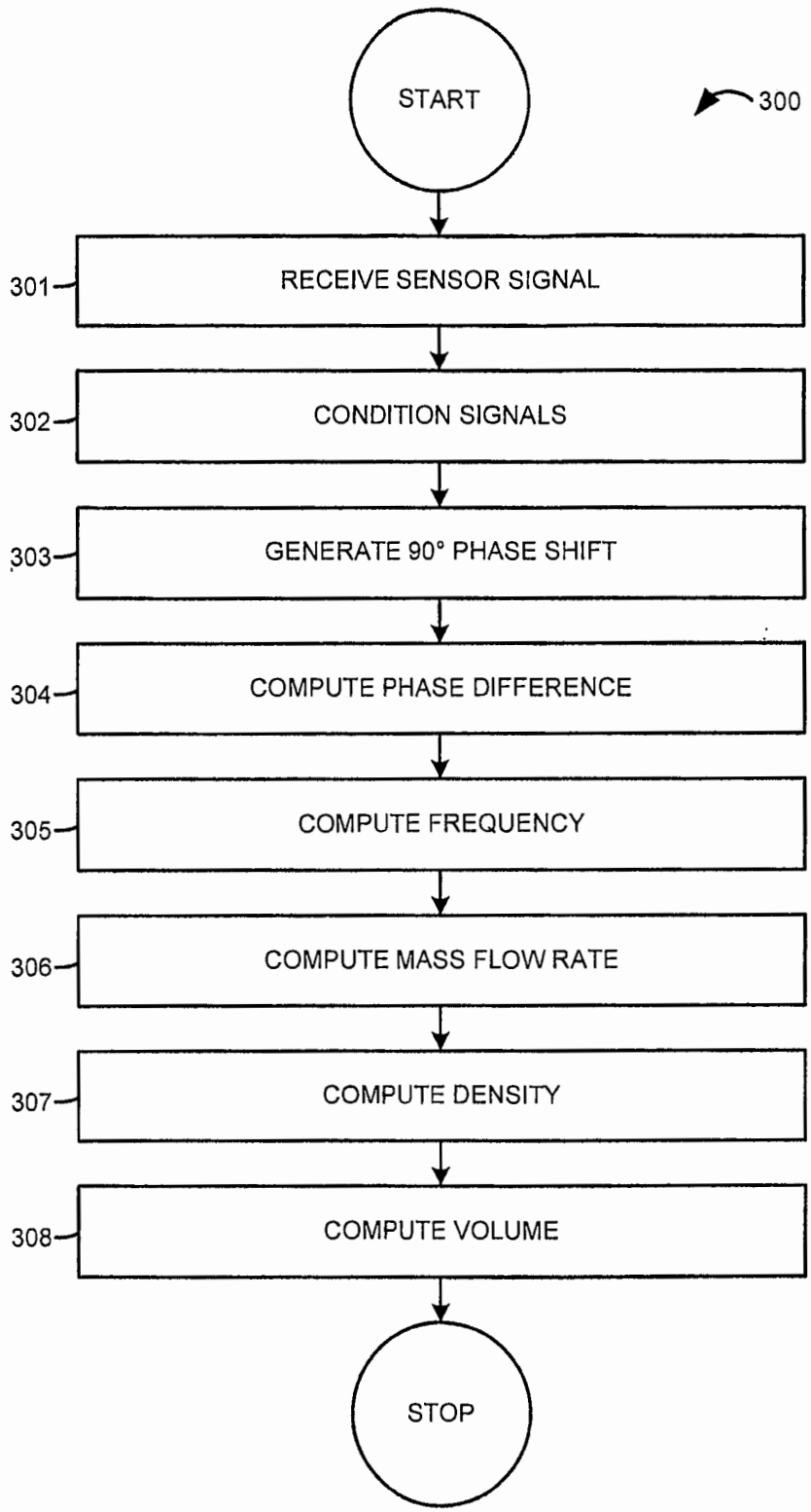
START
300
301
RECEIVE SENSOR SIGNAL
302
CONDITION SIGNALS
303
GENERATE 90° PHASE SHIFT
304
COMPUTE PHASE DIFFERENCE
305
COMPUTE FREQUENCY
306
COMPUTE MASS FLOW RATE
307
COMPUTE DENSITY
308
COMPUTE VOLUME
STOP

FIG. 3

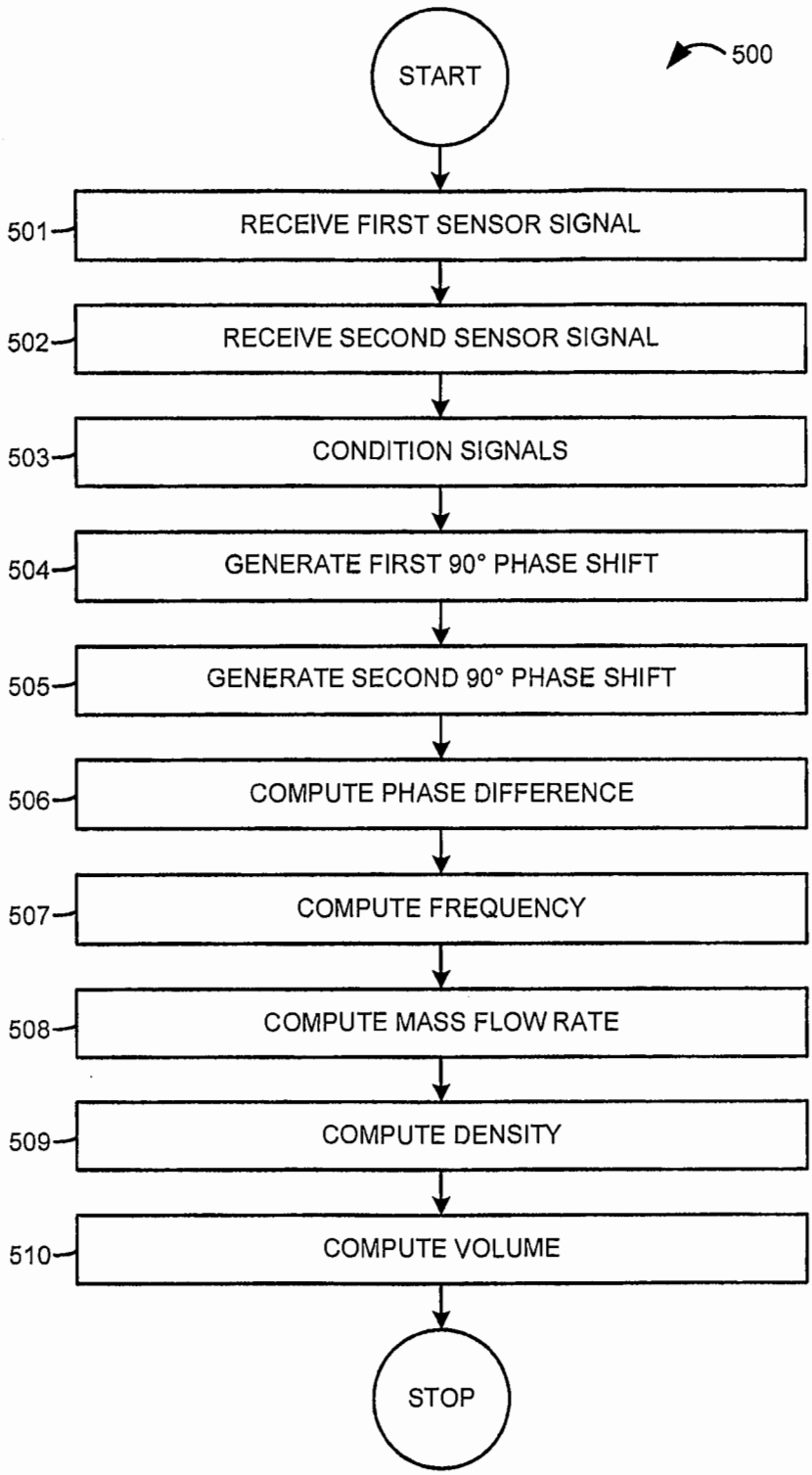
START
500
501
RECEIVE FIRST SENSOR SIGNAL
502
RECEIVE SECOND SENSOR SIGNAL
503
CONDITION SIGNALS
504
GENERATE FIRST 90° PHASE SHIFT
505
GENERATE SECOND 90° PHASE SHIFT
506
COMPUTE PHASE DIFFERENCE
507
COMPUTE FREQUENCY
508
COMPUTE MASS FLOW RATE
509
COMPUTE DENSITY
510
COMPUTE VOLUME
STOP

FIG. 5

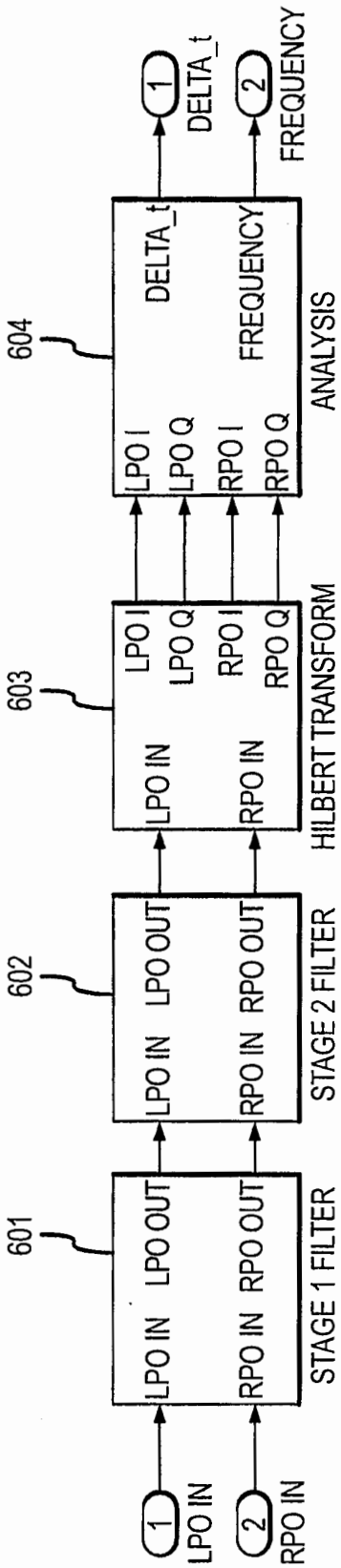
1
LPO IN
2
RPO IN
601
LPO IN
RPO IN
LPO OUT
RPO OUT
STAGE 1 FILTER
602
LPO IN
RPO IN
LPO OUT
RPO OUT
STAGE 2 FILTER
603
LPO IN
RPO IN
LPO I
LPO Q
RPO I
RPO Q
HILBERT TRANSFORM
604
LPO I
LPO Q
RPO I
RPO Q
DELTA_t
FREQUENCY
ANALYSIS
1
DELTA_t
2
FREQUENCY

FIG. 6

600

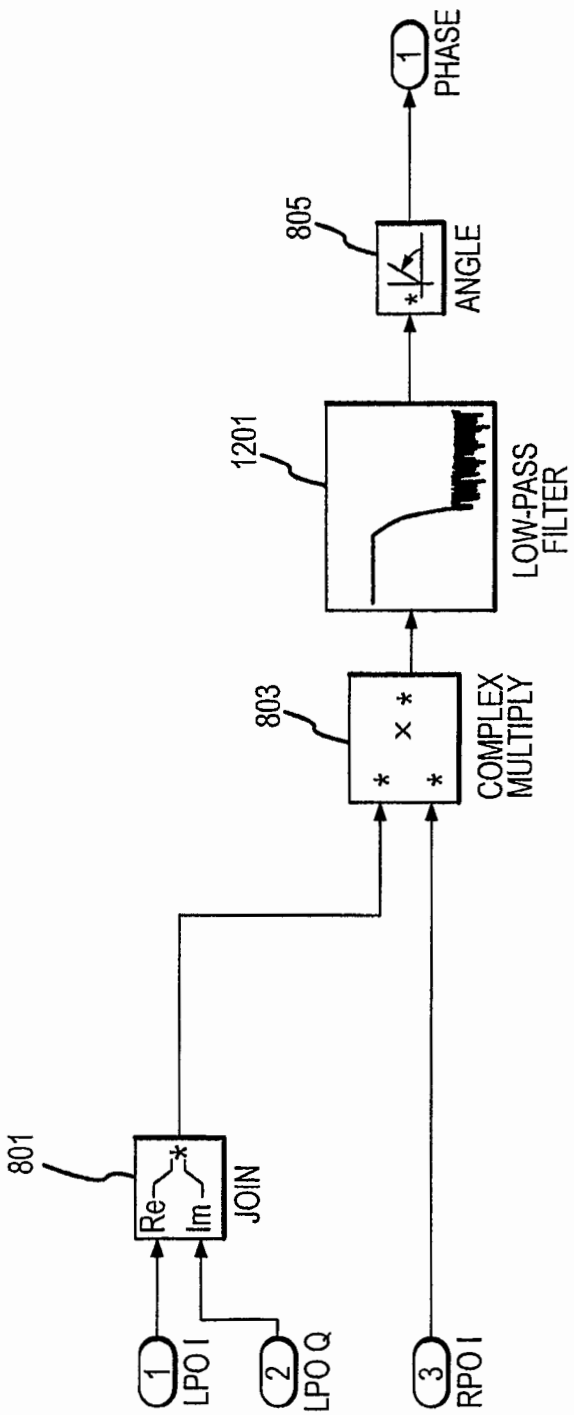
801
Re
Im
JOIN
1
LPO I
2
LPO Q
3
RPO I
803
COMPLEX MULTIPLY
1201
LOW-PASS FILTER
805
ANGLE
1
PHASE
604a'

FIG. 12

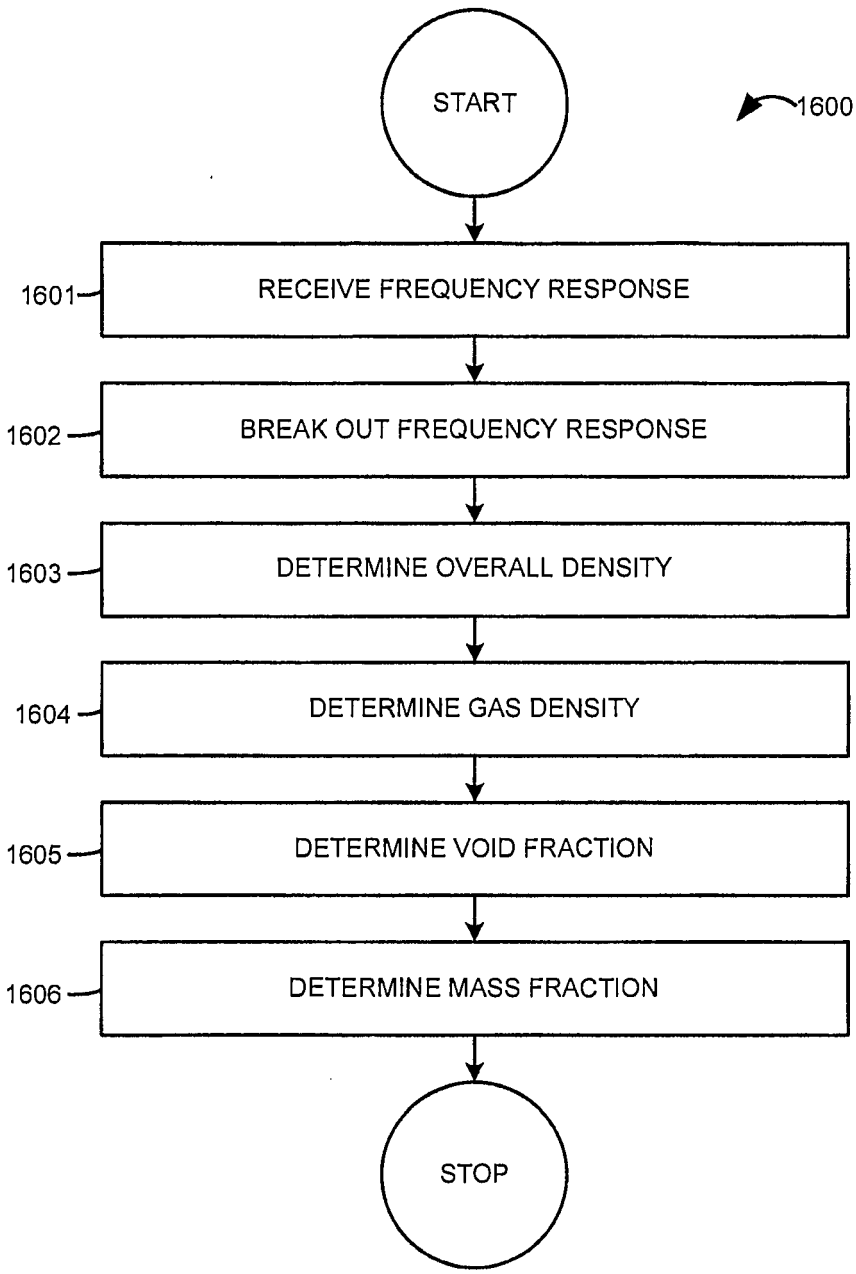
START
1600
1601
RECEIVE FREQUENCY RESPONSE
1602
BREAK OUT FREQUENCY RESPONSE
1603
DETERMINE OVERALL DENSITY
1604
DETERMINE GAS DENSITY
1605
DETERMINE VOID FRACTION
1606
DETERMINE MASS FRACTION
STOP

FIG. 16

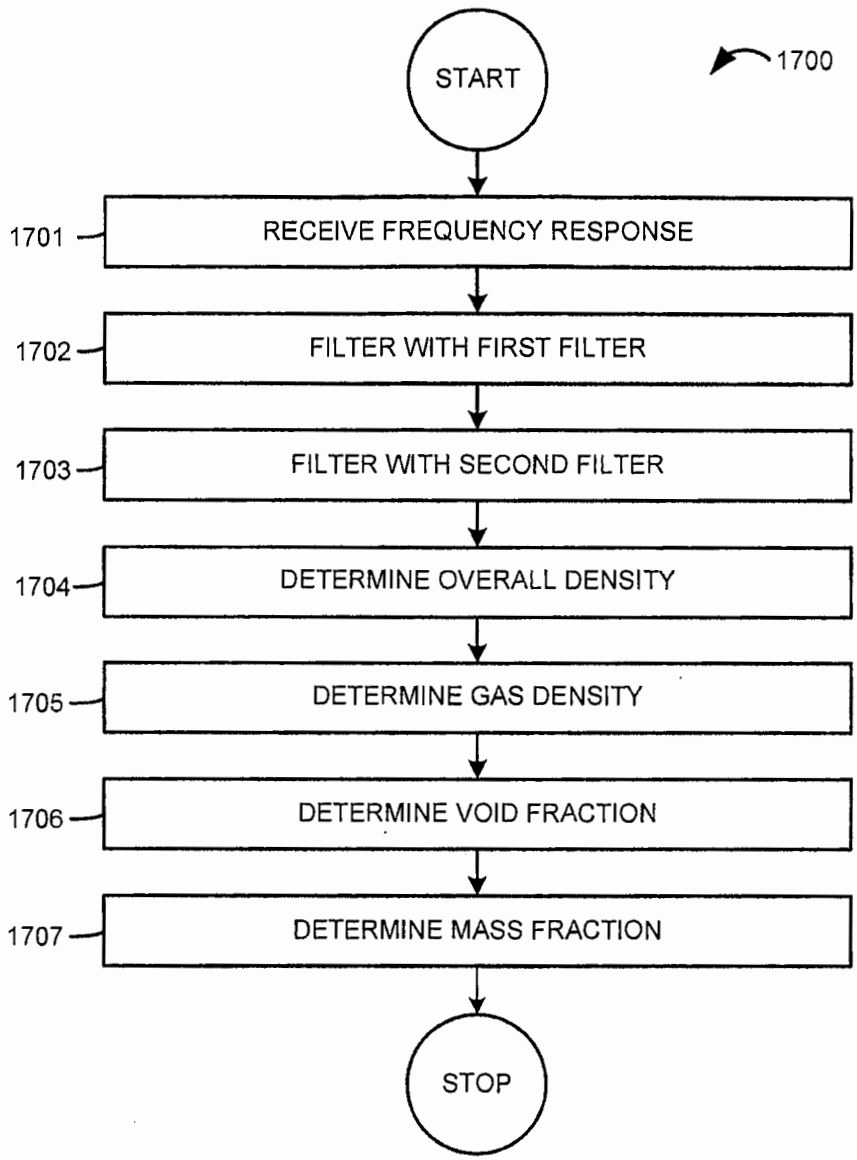
START
1700
1701
RECEIVE FREQUENCY RESPONSE
1702
FILTER WITH FIRST FILTER
1703
FILTER WITH SECOND FILTER
1704
DETERMINE OVERALL DENSITY
1705
DETERMINE GAS DENSITY
1706
DETERMINE VOID FRACTION
1707
DETERMINE MASS FRACTION
STOP

FIG. 17

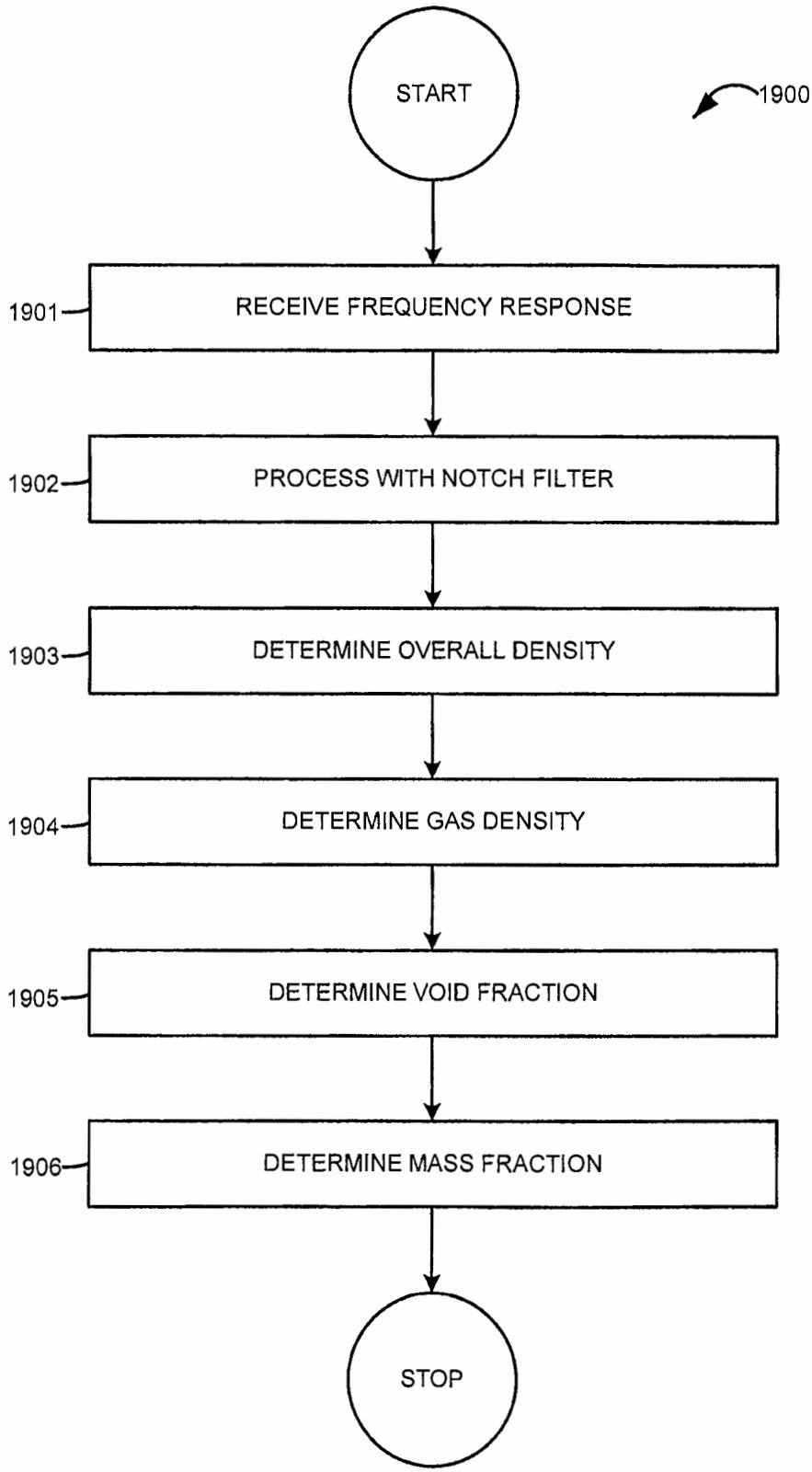
START
1900
1901
RECEIVE FREQUENCY RESPONSE
1902
PROCESS WITH NOTCH FILTER
1903
DETERMINE OVERALL DENSITY
1904
DETERMINE GAS DENSITY
1905
DETERMINE VOID FRACTION
1906
DETERMINE MASS FRACTION
STOP

FIG. 19